Furnace and Heat Recovery Area Design and Analysis for Conceptual Design of Supercritical O_2-Based PC Boiler

Topical Report

Andrew Seltzer

June 2006

DE-FC26-04NT42207

Task 3

Foster Wheeler Power Group, Inc.
12 Peach Tree Hill Road
Livingston, New Jersey 07039

DISCLAIMER

ABSTRACT

The objective of the furnace and heat recovery area design and analysis task of the Conceptual Design of Supercritical Oxygen-Based PC Boiler study is to optimize the location and design of the furnace, burners, over-fire gas ports, and internal radiant surfaces. The furnace and heat recovery area were designed and analyzed using the FW-FIRE, Siemens, and HEATEX computer programs.

The furnace is designed with opposed wall-firing burners and over-fire air ports. Water is circulated in the furnace by forced circulation to the waterwalls at the periphery and divisional wall panels within the furnace..

Compared to the air-fired furnace, the oxygen-fired furnace requires only 65% of the surface area and 45% of the volume. Two oxygen-fired designs were simulated: 1) with cryogenic air separation unit (ASU) and 2) with oxygen ion transport membrane (OITM).

The maximum wall heat flux in the oxygen-fired furnace is more than double that of the air-fired furnace due to the higher flame temperature and higher H_2O and CO_2 concentrations. The coal burnout for the oxygen-fired case is 100% due to a 500°F higher furnace temperature and higher concentration of O_2. Because of the higher furnace wall temperature of the oxygen-fired case compared to the air-fired case, furnace water wall material was upgraded from T2 to T92.

Compared to the air-fired heat recovery area (HRA), the oxygen-fired HRA total heat transfer surface is 35% less for the cryogenic design and 13% less for the OITM design due to more heat being absorbed in the oxygen-fired furnace and the greater molecular weight of the oxygen-fired flue gas. The HRA tube materials and wall thickness are nearly the same for the air-fired and oxygen-fired design since the flue gas and water/steam temperature profiles encountered by the heat transfer banks are similar.

Table of Contents

List of Figures

1.0 Introduction

This report describes the results and conclusions of Task 3, furnace and heat recovery area (HRA) design and analysis of the Conceptual Design of Supercritical Oxygen-Based PC Boiler study. The objective of the Conceptual Design of Supercritical Oxygen-Based PC Boiler study is to develop a conceptual pulverized coal (PC)-fired power plant, which facilitates the practical capture of carbon dioxide capture for subsequent sequestration. The furnace and heat recovery area design and analysis task, which was performed using the FW-FIRE, Siemens and HEATEX computer programs, is aimed at optimizing the location and design of the furnace, burners, over-fire gas ports, and internal radiant surfaces. Design conditions were based on the results of the system analysis and design task (Task 1) and Advanced O_2 Separation System Integration (Task 2). Three furnace and HRA designs were developed: 1) a conventional air-fired PC power plant and 2) an oxygen-based PC plant with cryogenic ASU and 3) an oxygen-based PC plant with oxygen ion transport membrane.

2.0 Executive Summary

The objective of the Conceptual Design of Supercritical Oxygen-Based PC Boiler study is to develop a conceptual pulverized coal-fired power plant, which facilitates the practical capture of carbon dioxide capture for subsequent sequestration. The furnace and heat recovery area design and analysis task, which was performed using the FW-FIRE, Siemens, and HEATEX computer programs, is aimed at optimizing the location and design of the furnace, burners, over-fire gas ports, and internal radiant surfaces.

A simulation was made for both the reference air-fired case and for the oxygen-fired case. Two oxygen-fired models were constructed: one for the cryogenic air separation unit (ASU) design (with radiant superheater partial division walls) and the second for the oxygen ion transport membrane (IOTM) design with a furnace wall radiant superheater and a high temperature air heater. Boundary conditions are based on ASPEN simulations of the power plant.

The furnace is designed with opposed wall-firing burners and over-fire air ports located at one burner pitch above the top burner row. The O_2PC supercritical boiler incorporates the Benson Vertical technology, which uses low fluid mass flow rates in combination with optimized rifled tubing. Water is circulated in the furnace by forced circulation to the waterwalls at the periphery and divisional wall panels within the furnace.

For the air-fired furnace simulation, the maximum flue gas temperature is approximately 3350^{o}F. The maximum heat flux is approximately 70,000 Btu/hr-ft^2 and is located on the side wall at the top of the burner zone. The total heat absorbed by the furnace walls before the furnace exit is 1770 MM Btu/hr. The maximum temperature of the waterwalls is approximately 870^{o}F and of the division walls is approximately 1000^{o}F. Total burnout of all particle sizes is 99.6%. Average NOx concentration at the furnace outlet is 276 ppmvw (0.38 lb/MMBtu).

Compared to the air-fired furnace, the oxygen furnace requires only 65% of the surface area and 45% of the volume. Two oxygen-fired designs were simulated: 1) with cryogenic ASU and 2) with OITM. The mixed primary/secondary gas O_2 content (before combustion) is approximately 40%.

In the oxygen-fired furnace, the maximum flue gas temperature is approximately 3900^{o}F for cryogenic ASU and 3850^{o}F for OITM. The maximum heat flux is 171,000 Btu/hr-ft^2 for cryogenic ASU and 180,000 Btu/hr-ft^2 for OITM. The maximum wall heat flux in the oxygen-fired furnace is more than double that of the air-fired furnace due to the higher flame temperature and higher H_2O and CO_2 concentrations. The total heat absorbed by the furnace walls before the furnace exit is approximately 2287 (cryogenic) and 2029 (OITM) MM Btu/hr. The coal burnout for the oxygen-fired case is 100% due to the high furnace temperature and high concentration of O_2. NOx is 261 ppmvw (0.18 lb/MMBtu).

The maximum temperature of the oxygen-fired furnace is approximately 1060^{o}F for the waterwalls, 1065^oF for the division walls, and 1100^{o}F for OITM radiant superheater walls. Because of the higher temperature of the oxygen-fired case compared to the air-fired case, furnace tube material was upgraded from T2 to T92.

Since the boiler is a supercritical once-through sliding pressure unit, part load cases (72%, 50%, and 25%) were run and evaluated with thermal/hydraulic and structural criteria. A pressure equalization header is included at an elevation of 80' to ensure stable operation at low loads.

HEATEX was used to determine the heat recovery area (HRA) design of the convective tube banks between the furnace exit and the SCR/air heater. These tube banks include the finishing superheater, finishing reheater, primary superheater, primary reheater, upper economizer, and lower economizer.

For the air-fired design, total surface area of all convective banks is 335,025 ft^2. The total heat transferred to the water/steam is 1431 MM Btu/hr as 3.59 MM lb/hr of flue gas is cooled from 2185ºF to 720ºF.

For the cryogenic ASU oxygen-fired design, convective bank total surface area is 218,693 ft^2 and the total heat transferred to the water/steam is 1151 MM Btu/hr as 2.12 MM lb/hr of flue gas is cooled from 2450ºF to 695ºF. For the OITM oxygen-fired design, convective bank total surface area is 274,466 ft^2 and the total heat transferred to the water/steam is 1185 MM Btu/hr and to the air is 990 MM Btu/hr as 2.68 MM lb/hr of flue gas is cooled from 2950ºF to 695ºF.The total heat transfer surface required in the oxygen-fired HRA is less than the air-fired HRA due to more heat being absorbed in the oxygen-fired furnace and the greater molecular weight of the oxygen-fired flue gas.

The HRA tube materials and wall thickness are nearly the same for the air-fired and oxygen-fired design since the flue gas and water/steam temperature profiles encountered by the heat transfer banks are similar.

A tubular convective air heater is included in the OITM O_2-PC to provide the necessary air heating for the membrane separation process. The furnace air heater is an Incoloy MA956 three pass tubular design situated above the furnace nose.

3.0 Experimental

This work performed for this report was performed utilizing computer program simulations. No experimental equipment was used.

4.0 Results and Discussion

4.1 Furnace Design and Analysis

4.1.1 FW-FIRE Computer Program Description

FW-FIRE (Fossil fuel, Water-walled Furnace Integrated Reaction and Emission Simulation) simulates furnace combustion, heat transfer and pollutant formation based on fundamental principles of mass, momentum, and energy conservation [1]. FW-FIRE is an extended and enhanced version of PCGC-3, which was developed over a period of ten years by the Advanced Combustion Engineering Research Center (ACERC), operated jointly by Brigham Young University and the University of Utah. The FW-FIRE computer program incorporates the latest state-of-art coal combustion/gasification, pollutant formation, and physical analysis techniques based on extensive empirical research.

The FW-FIRE code performs general three dimensional multiphase gas combustion steady state analysis of reactive fluid flows. The program is fully capable of analyzing gas-fired and coal-fired boilers although FW-FIRE was initially tailored for pulverized coal combustion and gasification.

The FW-FIRE program models the gas flow field as a three dimensional (Cartesian or cylindrical) turbulent reacting continuum that is described locally by the Newtonian form of the Navier-Stokes equations coupled with the energy equation and other appropriate constitutive equations. These equations are solved in Eulerian framework to predict gas properties such as pressure, temperature, velocity, and pollutants and other species concentrations.

The Reynolds stress terms, which result from Favre-averaging of the conservation equations, are approximated using the Boussinesq assumption and effective eddy viscosity. The value of the eddy viscosity and subsequent closure of the turbulence equations is made using either a linear or non-linear k-ε two-equation model. The effects of turbulence of the flow field on the combustion reactions are included.

The turbulent flow field is also coupled with the combustion chemistry. Since gaseous reactions are limited by mixing rates and not reaction kinetics, the process chemistry is calculated using locally instantaneous equilibrium based on the degree of mixing of the species. Rate constants for processes such as devolatilization (two step process) and char oxidation are built-in to the program based on empirical testing.

A Lagrangian model of the particle conservation equations is used to predict particle transport by characterizing the particle field as a series of discrete particle trajectories through the gas continuum. Particles interact with the gas field via mass, momentum, and energy exchange. Particle properties such as burnout, velocities, temperatures, and particle component compositions are obtained by integrating the governing equations along the trajectory paths. The program possesses the capability to input a particle size distribution and chemical composition.

In a pulverized coal flame, the radiation field is a multi-component, non-uniform, emitting, absorbing, gas-particle system. The coal particles cause anisotropic and multiple scattering, and the flame is surrounded by non-uniform, emitting, reflecting, absorbing surfaces. The radiation field calculations are based on an energy balance on a beam of radiation passing through a volume element containing the absorbing-reflecting-emitting medium. An Eulerian framework using a discrete-ordinates approach is used to model this process. Heat transfer via radiation and convection to waterwall and tube banks is determined by specifying a local wall temperature and emissivity.

The set of non-linear differential equations is discretized and combined by a upwind and weighted central-differencing scheme. The resulting gas flow field finite difference equations are solved using variations of the SIMPLE/SIMPER algorithm.

FW-FIRE contains a sub-model for the prediction of nitrogen pollutant emissions. This sub-model has the capability of predicting both fuel and thermal NOx formation. Fuel NO formation can proceed directly to N_2 and NO (such as in the case of char) or through HCN and NH_3 which are oxidized to form NO and reduced to N_2 (such as in the case of volatiles). Global reaction rates are based on work by de Soete and Bose. Thermal NO formation is governed by the extended Zel:dovich mechanism.

4.1.2 Model Geometry

A simulation was made for both the reference air-fired case and for the oxygen-fired case. The FW-FIRE model simulates the furnace, in height from the bottom of the hopper to the roof, in depth from the front wall to the rear wall, and in width from the left side wall to the right side wall. Furnace partial division walls are also included in the model. Finer meshes are used to model the burners and over-fire air (OFA) ports. The air-fired model contains 528,840 (117x113x40) nodes and is shown in Figure 4.1. The oxygen-fired model contains 484,160 (136x89x40) nodes and is shown in Figure 4.2.

4.1.3 Boundary Conditions

Boundary conditions are based on ASPEN simulations of the power plant [2,3]. The air-fired, oxygen-fired with ASU and oxygen-fired with Oxygen ion transport membrane (OITM) ASPEN reference cycle diagrams are presented in Figure 4.6, Figure 4.7, and Figure 4.8 respectively The input data required by FW-FIRE include fuel analysis, coal particle size distribution (mass percentage for each size bin), waterwall fluid temperatures, and the velocities, flow rates and temperatures of primary and secondary gas streams. Boundary conditions are detailed in Figure 4.3, Figure 4.4, and Figure 4.5

The waterwalls of the furnace are assumed to be gray and diffusive. The wall temperature at each location is calculated based on the fluid temperature and the heat flux at the wall cell.

For coal devolatilization kinetic properties, Ubhayakar rate parameters were employed for bituminous coal. For bituminous char oxidation, Sandia kinetic and burning mode parameters were applied for Illinois #6 coal.

The selected quantity of flue gas recycle produces a 600ºF higher equilibrium temperature in O_2-firing than air-firing. This may increase the potential for slagging in the furnace depending on the ash fusion characteristics. Consequently, for a dry bottom furnace design a minimum flue gas recycling flow may be required to avoid slagging depending on fuel type. Alternatively a wet-bottom or slag type furnace could be used to resolve ash deposition and removal problems.

4.1.4 Air-Fired Reference Case

The general layout drawing of the air-fired reference case is shown in Figure 4.9. The furnace has a total 24 opposed wall-fired burners (3 vertical x 4 horizontal x 2 walls) and 10 overfire air ports. 30% of the total combustion air is injected through the over-fire air ports located at one burner pitch above the top burner row. The radiant heat transfer surface consists of 2.75” OD tube waterwalls and five 2.0” OD tube partial divisional wall panels. Water is circulated in the furnace by natural circulation.

The boundary conditions were applied to the computational model and FW-FIRE was run until steady state conditions were achieved. The modeling results are summarized in Figure 4.10. The coal burnout shown in the table is the percentage of dry ash-free based coal burned. The furnace exit gas temperature (FEGT) shown in the table is the average temperature of flue gas before the platen superheater. The energy absorption listed is the total energy absorbed by water walls and partial division walls prior to the platen superheater. Total furnace absorption and FEGT predicted by FW-FIRE and ASPEN match closely.

Figure 4.11 is a plot of the flue gas velocity magnitude in a vertical plane through the second burner column. It can be seen that the gas velocity near the burners accelerates to greater than 130 ft/s due to the reduced gas density after particle ignition. Figure 4.12 presents a plot of gas temperature in a vertical plane through the second burner column. The maximum flue gas temperature is approximately 3350^{o}F. The mole fraction of O_2 through the second burner column is presented in Figure 4.13.

The heat flux at the furnace water wall is shown in Figure 4.14. The maximum heat flux is approximately 70,000 Btu/hr-ft^2 and is located on the side wall at the top of the burner zone. The total heat absorbed by the furnace walls before the furnace exit is 1770 MM Btu/hr. Figure 4.15 displays temperatures of the furnace walls and roof. The maximum temperature of the waterwalls is approximately 870^{o}F and of the division walls is approximately 1000^{o}F. Figure 4.16 presents the CO concentration at the wall, peaks at approximately 10% due to the sub-stoichiometric conditions of the lower furnace (without overfire air the wall CO would be below 2%).

The trajectories of the 72-micron particles are plotted in Figure 4.17 with colors in each trajectory representing the mass fraction of char in the particle. Char is formed from devolatilization and consumed by oxidation. The maximum char mass fraction is usually less than the mass fraction of fixed carbon in a proximate analysis. Figure 4.17 shows that all of the 72-micron particles are completely burned before the furnace exit. The trajectories of 176-micron particles are plotted in Figure 4.18. It can be observed from Figure 4.18 that some particles are not completely burned at the exit of the furnace, causing unburned carbon in the fly ash. Total burnout of all particle sizes is 99.66% (2.61% LOI). Average NOx concentration at the furnace outlet is 276 ppmvw (0.38 lb/MMBtu).

4.1.5 Oxygen-Fired Design Case

The preliminary size of the furnace heat transfer area was based on a calculation of average wall heat flux using the Foster Wheeler computer program, EMISS [5]. The EMISS computer program calculates radiative heat flux of CO_2 and H_2O gases. A three dimensional CFD run was then made using FW-FIRE to more accurately determine the total heat absorption. Based on the CFD results, the height of the furnace model was adjusted until the total heat absorption approximately matched that required in the ASPEN oxygen-fired design case. Figure 4.19 shows a comparison between the sizes of the resultant oxygen-fired furnace and the air-fired reference furnace. Compared to the air-fired furnace, the oxygen furnace has only approximately 65% of the surface area and approximately 45% of the volume. Figure 4.20 presents the oxygen-fired design general layout drawing for the cryogenic ASU design and Figure 4.21 for the OITM design.

The oxygen-fired furnace has a total 24 opposed wall-fired burners (4 vertical x 3 horizontal x 2 walls) and 8 overfire gas ports. The burner designs (including 0.5 primary air swirl) are based on the subcritical O_2-PC burner design [6]. The radiant heat transfer surface consists of 2.75" OD tube waterwalls and ten 2.0" OD tube partial divisional wall panels. Water is circulated in the furnace by natural circulation.

Two designs were simulated: 1) with cryogenic ASU and 2) with OTM ASU. The designs differ as follows:

> **Radiant Superheater:** In the cryogenic design, radiant superheat (downstream of the primary superheater) is provided by the partial division walls, whereas in the OITM design radiant superheat is provided by the waterwalls above 100' and the furnace roof. No division wall surface is required in the OITM design due to the increased coal-firing such that less evaporator surface (below 100') is required (in addition in the OITM design the furnace height is reduced by 5').
>
> **Air Heater:** A tubular convective air heater is included in the OITM to provide the necessary air heating for the membrane separation process.

The modeling results are summarized in Figure 4.10. The coal burnout for the oxygen-fired case is 100% due to the high furnace temperature and high concentration of O_2. Total furnace absorption and FEGT predicted by FW-FIRE and ASPEN match well. NOx is reduced by oxygen firing (compared to air-firing) by about a factor of two from 0.38 lb/MMBtu to 0.18 lb/MMBtu.

4.1.5.1 Cryogenic ASU – Full Load

Figure 4.22 is a plot of the flue gas velocity magnitude in a vertical plane through the middle burner column. It can be seen that the gas velocity near the burners accelerates to nearly 150 ft/s due to the reduced gas density after particle ignition. Figure 4.23 presents a plot of gas temperature in a vertical plane through the middle burner column. The maximum flue gas temperature is approximately 3900^{o}F. The mole fraction of O_2 through the middle burner column is presented in Figure 4.24. The mixed primary/secondary gas O_2 content (before combustion) is 41%.

The heat flux at the furnace water wall is shown in Figure 4.25. The maximum heat flux is approximately 171,000 Btu/hr-ft^2 and is located on the side wall at the top of the burner zone. This maximum heat flux is approximately 2.5 times the air-fired case due to the higher flame temperature and higher H_2O and CO_2 concentrations. The total heat absorbed by the furnace walls before the furnace exit is 2287 MM Btu/hr. Figure 4.26 displays temperatures of the furnace walls and roof. The maximum temperature of the waterwalls is approximately 1035^{o}F and of the division walls is approximately 1050^{o}F. Because of the higher temperature of the oxygen-fired case compared to the air-fired case, furnace water wall material was upgraded from 0.22” thick SA-213-T2 to 0.20” thick SA-213-T92. Figure 4.27 presents the CO concentration at the wall, which is significantly greater than for the air-fired case (Figure 4.16) and its effects on corrosion will need to be studied in future work.

The trajectories of the 69-micron particles are plotted in Figure 4.28 with colors in each trajectory representing the mass fraction of char in the particle. Figure 4.28 shows that all of the 69-micron particles are completely burned before the furnace exit. The trajectories of 169-micron particles are plotted in Figure 4.29. Note that due to the higher temperature and O_2 concentration all the 169-micron particles are completely burned as compared to the air-fired case (Figure 4.18) where there is some residual unburned char at the outlet.

4.1.5.2 Cryogenic ASU – Part Load

Since the boiler is a supercritical once-through sliding pressure unit, part load operation must be evaluated with thermal/hydraulic and structural criteria. Three part loads were selected for evaluation: 72%, 50%, and 25% (minimum Benson load). Boundary conditions were based on the ASPEN Task 1 System Analysis. Figure 4.30 presents the corresponding recycle flow versus load. The modeling results are summarized in Figure 4.31. Figure 4.32 presents the gas temperature in a vertical plane through the middle burner column for the part load cases. The heat flux at the furnace water wall is shown for the part load cases in Figure 4.33. The average and peak heat flux versus height is presented in Figure 4.34.

4.1.5.3 Integration of Oxygen Ion Transport Membrane

Figure 4.35 is a plot of the flue gas velocity magnitude in a vertical plane through the middle burner column. It can be seen that the gas velocity near the burners accelerates to nearly 150 ft/s due to the reduced gas density after particle ignition. Figure 4.36 presents a plot of gas temperature in a vertical plane through the middle burner column. The maximum flue gas temperature is approximately 3850^{o}F. The mole fraction of O_2 through the middle burner column is presented in Figure 4.37. The mixed primary/secondary gas O_2 content (before combustion) is 39%.

The heat flux at the furnace water wall is shown in Figure 4.38. The maximum heat flux is approximately 180,000 Btu/hr-ft^2 and is located on the side wall at the top of the burner zone. This maximum heat flux is approximately 2.5 times the air-fired case due to the higher flame temperature and higher H_2O and CO_2 concentrations. The total heat absorbed by the furnace walls before the furnace exit is 2029 MM Btu/hr. Figure 4.39 displays temperatures of the furnace walls and roof. The maximum temperature of the evaporator waterwalls is approximately 1060^{o}F, of the radiant superheater is approximately 1100^{o}F, and of the air heater is approximately 1800 ^{o}F. Because of the higher temperature of the oxygen-fired case compared to the air-fired case, furnace water wall material was upgraded from 0.22” thick SA-213-T2 to 0.23” thick SA-213-T92. The air heater, which constructed from Incoloy MA956 material, is described in detail in Section 4.3. Figure 4.40 presents the CO concentration at the wall, which is significantly greater than for the air-fired case (Figure 4.16) and its effects on corrosion will need to be studied in future work.

The trajectories of the 69-micron particles are plotted in Figure 4.41 with colors in each trajectory representing the mass fraction of char in the particle. Figure 4.41 shows that all of the 69-micron particles are completely burned before the furnace exit. The trajectories of 169-micron particles are plotted in Figure 4.42. Note that due to the higher temperature and O_2 concentration all the 169-micron particles are completely burned as compared to the air-fired case (Figure 4.18) where there is some residual unburned char at the outlet.

Figure 4.1 – Computational Model of Air-Fired Furnace (with right side wall removed)

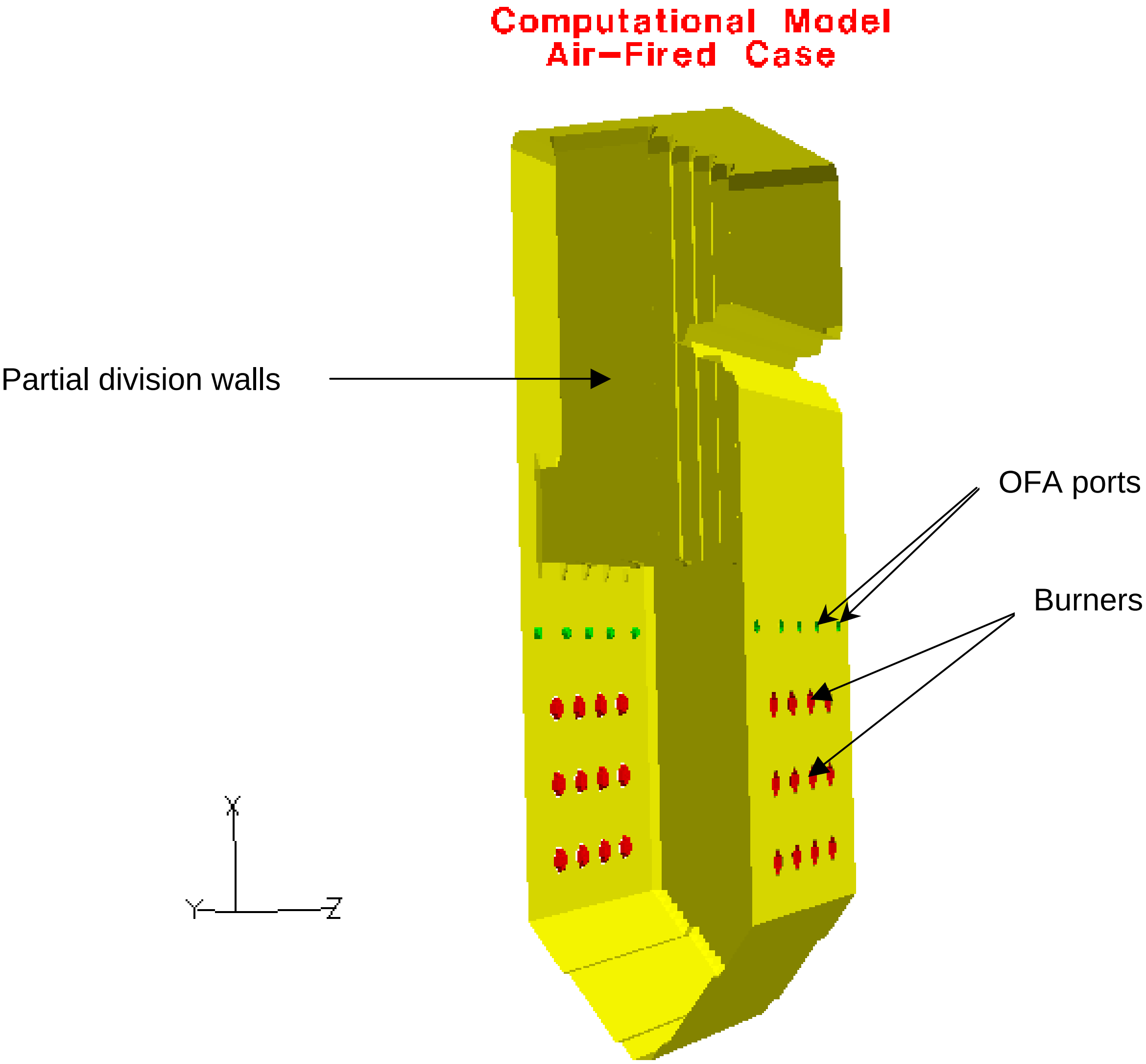

Figure 4.2 – Computational Model of Oxygen-Fired Furnace With OFA

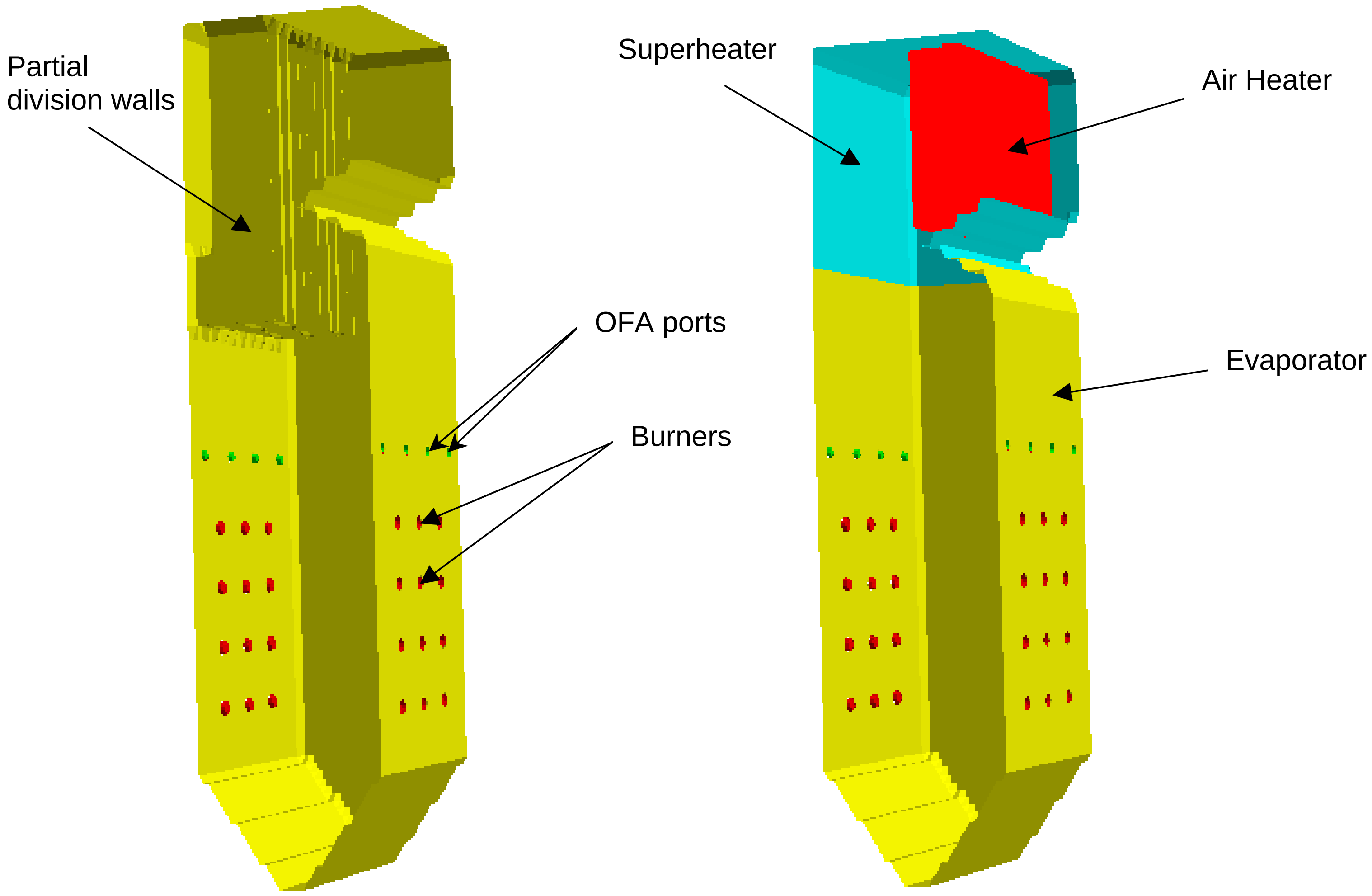

Cryogenic ASU

OITM

Figure 4.3 – Air-Fired Boundary Conditions

Coal			Size (micron)		
Ultimate Analysis			Distribution		Mass Percent
Ash	%	9.99%	9.3	%	28.9
S	%	2.51%	33.7	%	27.3
H	%	4.50%	71.7	%	23.9
C	%	63.75%	121.8	%	10.7
H2O	%	11.12%	175.5	%	9.2
N	%	1.25%	Total	%	100.0
O	%	6.88%			
Total	%	100.00%	< 75 micron	%	70
			< 150 micron	%	99
Volatile Matter (daf)	%	44.35%			
Density	lb/ft3	80.0			
HHV, as received	Btu/lb	11,666			

Coal Flow	319,000
Moisture in Coal	35,473

Heat Input	3721.45	MM Btu/hr

TCA	lb/hr	3,299,687
Excess O2	%	11.0
OFA	%	20.0%

Divwall	Temp (F)	Temp (K)
Inlet	854	730
Outlet	964	791

WW	Temp (F)	Temp (K)
Inlet	638	610
Outlet	810	705

	Flow Rate		Temperature	Density	Inner Diam.	Outer Diam.	Area per Port	No. of Ports	Axial Velocity	Tan./Axial	Rad./Axial	Coal Flow
	lb/hr	%	F	lb/ft3	in	in	ft2		ft/sec	Velocity	Velocity	lb/hr
Primary	550,000	16.5	219	0.059	13.100	22.750	1.887	24	57.1	0.00	0.00	283,527
Inner Sec. Air	425,044	12.7	580	0.039	23.750	33.375	2.999	24	42.5	0.00	0.21	
Outer Sec. Air	1,700,178	51.0	580	0.039	33.875	49.000	6.837	24	74.6	0.41	0.41	
Tertiary Air	0	0.0	580	0.039	0.000	12.100	0.799	24	0.0	0.00	0.00	
Overfire Air - Inner	335,664	10.1	580	0.039	0.000	19.000	1.969	10	122.7	0.00	0.00	
Overfire Air - Outer	324,274	9.7	580	0.039	19.500	27.000	1.902	10	122.7	0.00	0.21	
	3,335,159	100.0										

Figure 4.4 – Oxygen-Fired Boundary Conditions (Cryogenic ASU)

Coal Ultimate Analysis			Size (micron) Distribution		Mass Percent
Ash	%	9.99%	10.7	%	29.5
S	%	2.51%	33.7	%	38.2
H	%	4.50%	69.3	%	25.9
C	%	63.75%	118.2	%	5.5
H2O	%	11.12%	169.2	%	1.0
N	%	1.25%	Total	%	100.0
O	%	6.88%			
Total	%	100.00%	< 75 micron	%	85
			< 150 micron	%	99
Volatile Matter (daf)	%	44.35%			
Density	lb/ft3	80.0			
HHV, as received	Btu/lb	11,666			

Coal Flow	308,000
Moisture in Coal	34,250

Heat Input	3593.13	MM Btu/hr

TCA	lb/hr	1,809,811
Excess O2	%	11.0
OFA	%	20.0%

Divwall	Temp (F)	Temp (K)
Inlet	837	720
Outlet	974	796

WW	Temp (F)	Temp (K)
Inlet	593	585
Outlet	825	714

	Flow Rate lb/hr	 %	Temperature F	Density lb/ft3	Inner Diam. in	Outer Diam. in	Area per Port ft2	No. of Ports	Axial Velocity ft/sec	Tan./Axial Velocity	Rad./Axial Velocity	Coal Flow lb/hr
Primary	495,000	26.8	257	0.073	9.500	15.000	0.735	24	106.3	0.50	0.00	273,750
Inner Sec. Air	197,420	10.7	625	0.046	16.000	20.750	0.952	24	52.6	0.00	0.21	
Outer Sec. Air	789,679	42.8	625	0.046	21.750	29.000	2.007	24	99.8	0.41	0.41	
Tertiary Air	0	0.0	625	0.046	0.000	8.500	0.394	24	0.0	0.00	0.00	
Overfire Air - Inner	170,790	9.3	625	0.046	0.000	13.500	0.994	8	130.8	0.00	0.00	
Overfire Air - Outer	191,172	10.4	625	0.046	14.000	20.000	1.113	8	130.8	0.00	0.21	
	1,844,061	100.0										

Figure 4.5 – Oxygen-Fired Boundary Conditions (OITM)

Coal Ultimate Analysis			Size (micron) Distribution		Mass Percent
Ash	%	9.99%	10.7	%	29.5
S	%	2.51%	33.7	%	38.2
H	%	4.50%	69.3	%	25.9
C	%	63.75%	118.2	%	5.5
H_2O	%	11.12%	169.2	%	1.0
N	%	1.25%	Total	%	100.0
O	%	6.88%			
Total	%	100.00%	< 75 micron	%	85
			< 150 micron	%	99
Volatile Matter (daf)	%	44.35%			
Density	lb/ft3	80.0			
HHV, as received	Btu/lb	11,666			

Coal Flow	375,400
Moisture in Coal	41,744

Heat Input	4379.42	MM Btu/hr

TCA	lb/hr	2,306,255
Excess O_2	%	11.0
Drum Pressure	psia	
OFA	%	20.0%

Divwall	Temp (F)	Temp (K)
Inlet	837	721
Outlet	970	794

WW	Temp (F)	Temp (K)
Inlet	599	588
Outlet	830	716

	Flow Rate lb/hr	 %	Temperature F	Density lb/ft3	Inner Diam. in	Outer Diam. in	Area per Port ft2	No. of Ports	Axial Velocity ft/sec	Tan./Axial Velocity	Rad./Axial Velocity	Coal Flow lb/hr
Primary	600,000	25.6	236	0.076	9.500	15.000	0.735	24	125.1	0.50	0.00	333,656
Inner Sec. Air	257,350	11.0	625	0.046	16.000	20.750	0.952	24	68.6	0.00	0.21	
Outer Sec. Air	1,029,399	43.8	625	0.046	21.750	29.000	2.007	24	130.1	0.41	0.41	
Tertiary Air	0	0.0	625	0.046	0.000	8.500	0.394	24	0.0	0.00	0.00	
Overfire Air - Inner	217,639	9.3	625	0.046	0.000	13.500	0.994	8	166.6	0.00	0.00	
Overfire Air - Outer	243,612	10.4	625	0.046	14.000	20.000	1.113	8	166.6	0.00	0.21	
	2,347,999	100.0										

Figure 4.6 – Air-Fired Reference Case

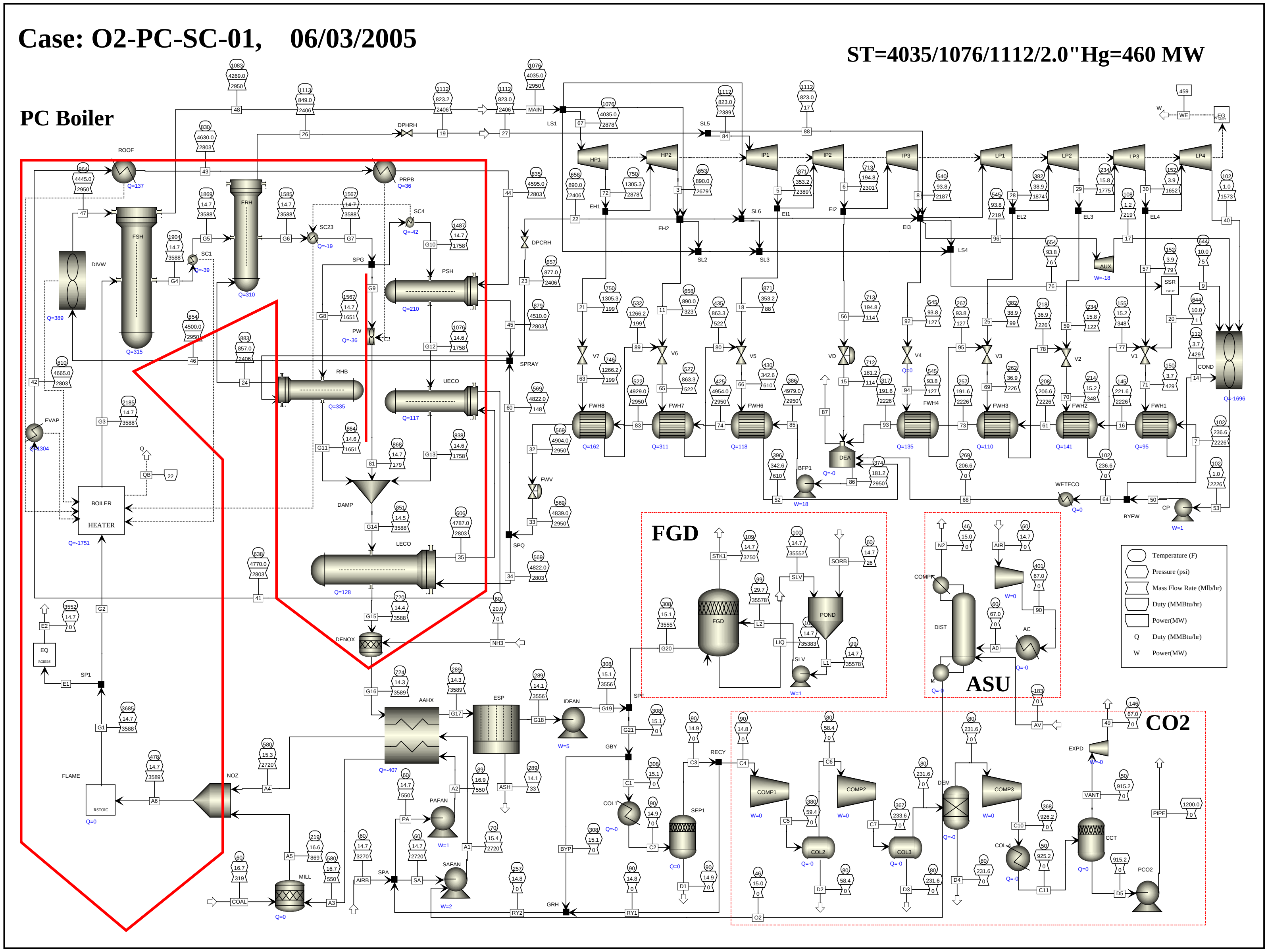

Figure 4.7 – Oxygen-Fired Design Case (Cryogenic ASU)

`

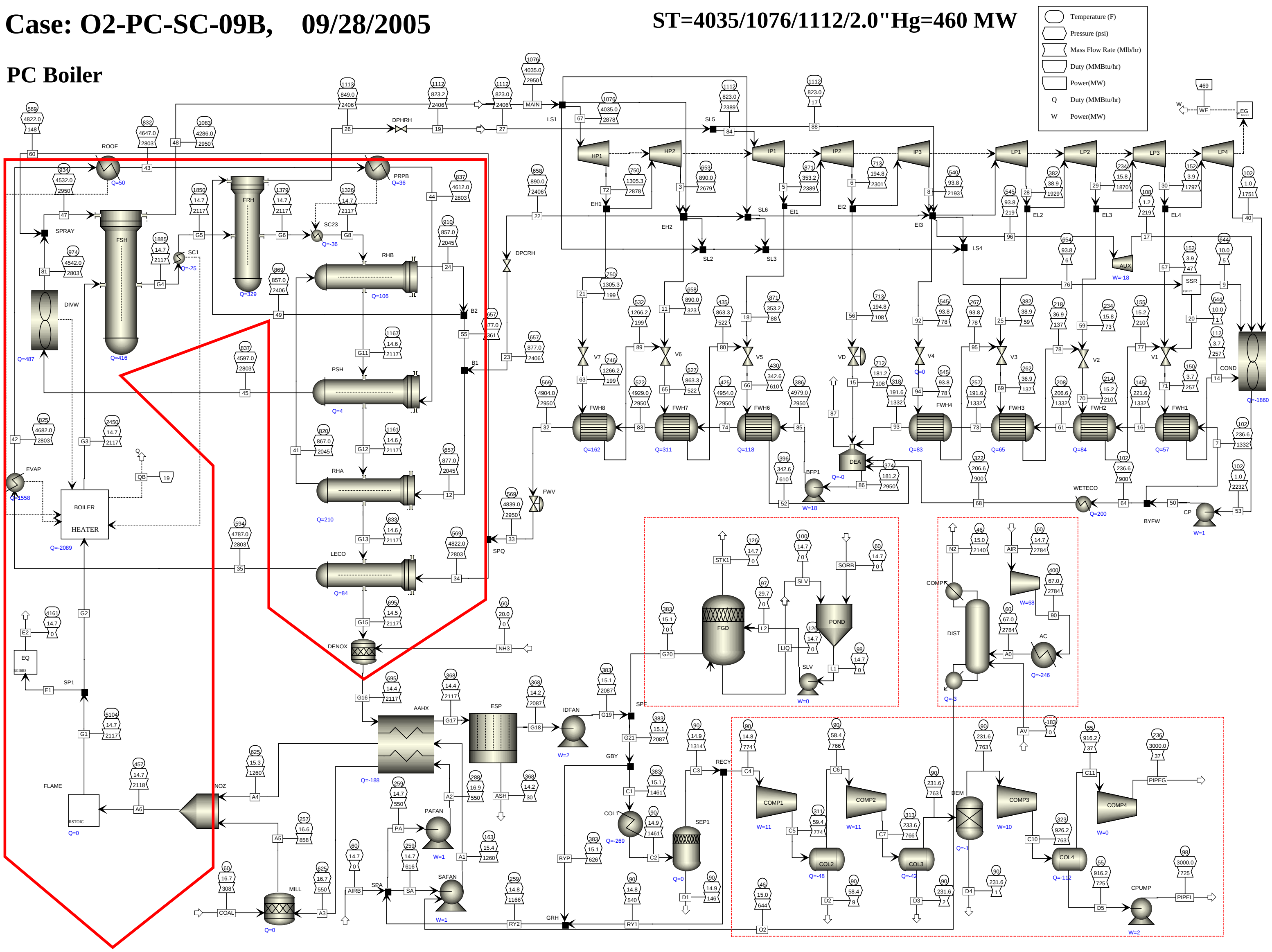

Figure 4.8 – Oxygen-Fired Design Case (OITM)

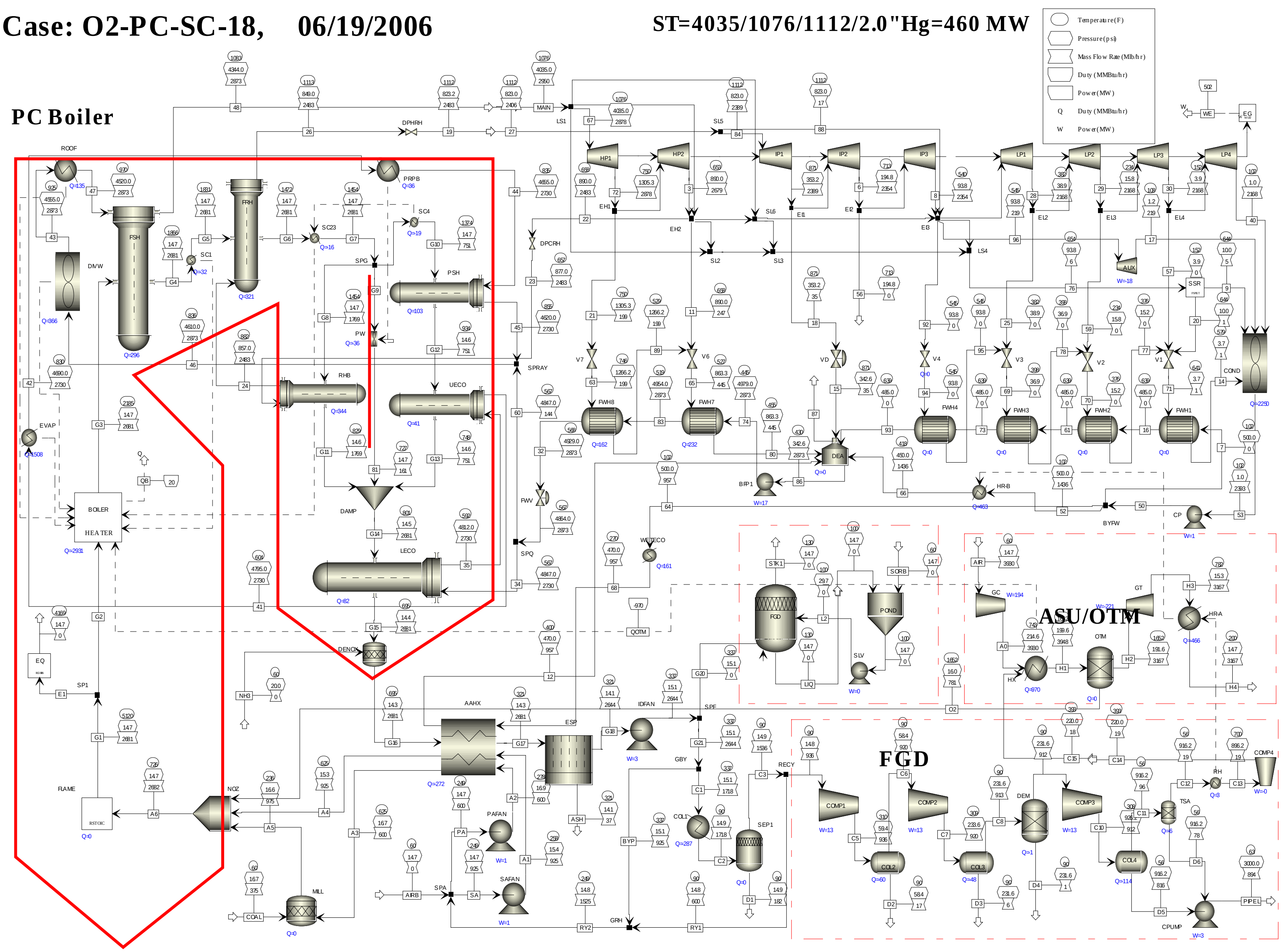

Case: O2-PC-SC-18, 06/19/2006

ST=4035/1076/1112/2.0"Hg=460 MW

Figure 4.9 – Air-Fired Boiler Design

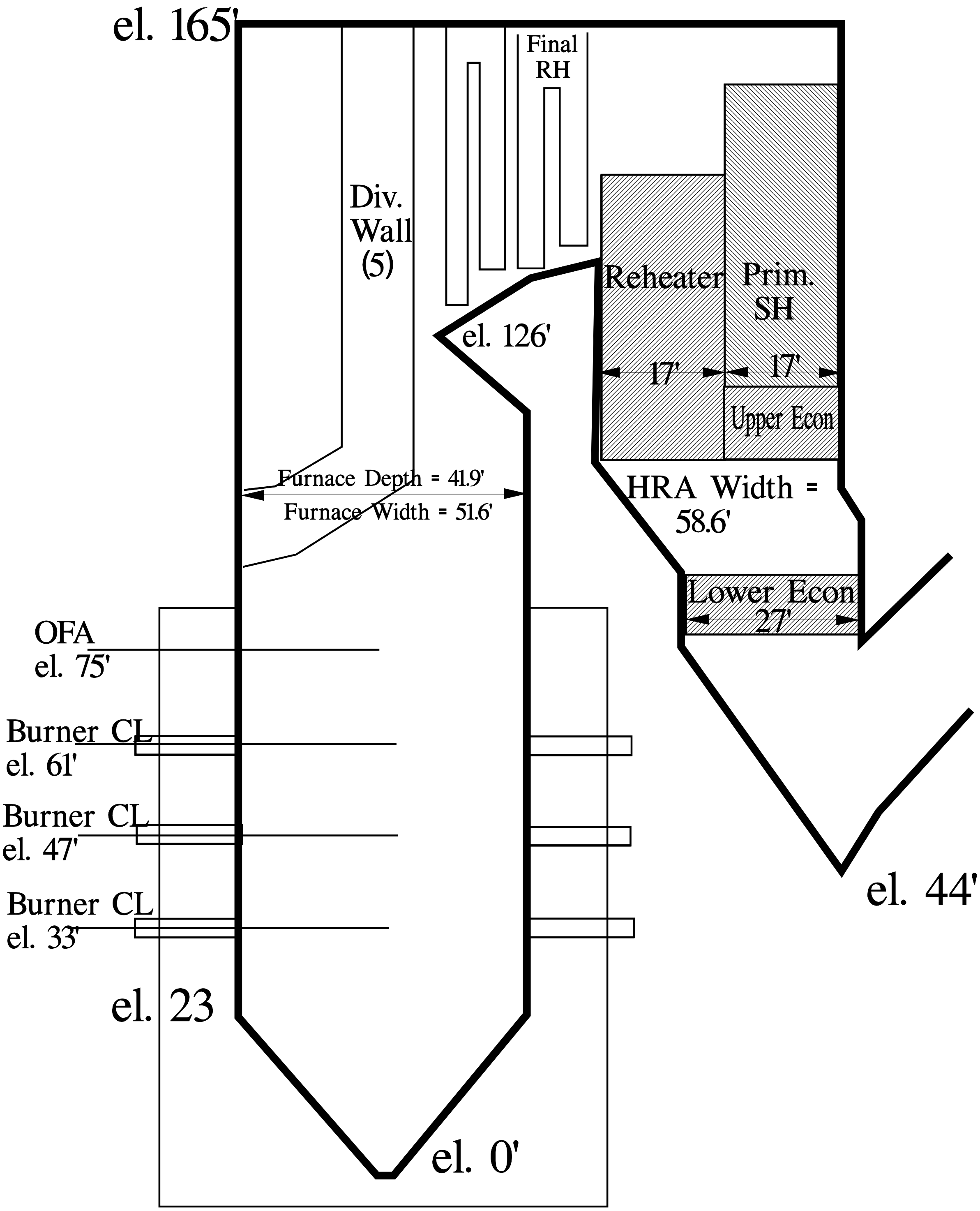

Figure 4.10 – Summary of FW-FIRE Furnace Modeling Results

Air-Fired

		FW-FIRE	ASPEN
Burnout	%	99.6	99.0
LOI	%	2.76	7.32
Total Furnace Absorption	M Btu/hr	1770	1751
Division Wall Absorption	M Btu/hr	445	451
FEGT	F	2107	2185
NOx	ppmvw	276	
	lb/MMBtu	0.38	

Oxygen-Fired (Cryogenic ASU)

		FW-FIRE	ASPEN
Burnout	%	100.0	99.9
LOI	%	0.00	0.78
Total Furnace Absorption	M Btu/hr	2096	2089
Division Wall Absorption	M Btu/hr	548	485
FEGT	F	2266	2450
NOx	ppmvw	261	
	lb/MMBtu	0.18	

Oxygen-Fired (OITM)

		FW-FIRE	ASPEN
Burnout	%	100.0	99.9
LOI	%	0.00	0.78
Total Furnace Absorption	M Btu/hr	2029	1961
Radiant SH Absorption	M Btu/hr	458	502
Air Heater Absorption	M Btu/hr	935	970
FEGT	F	1822	2185
NOx	ppmvw	273	
	lb/MMBtu	0.20	

Figure 4.11 – Gas Velocity for Air-Fired Case

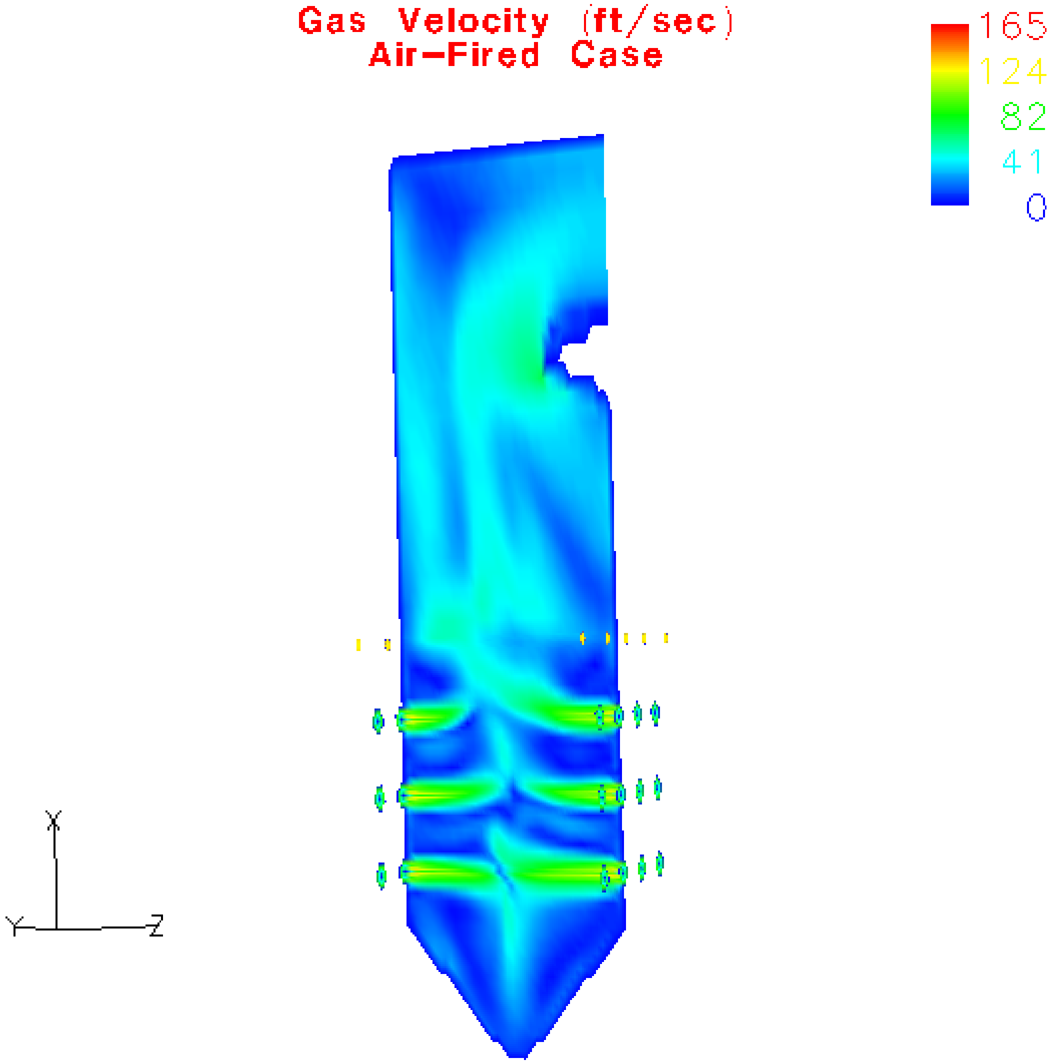

Figure 4.12 – Gas Temperature for Air-Fired Case

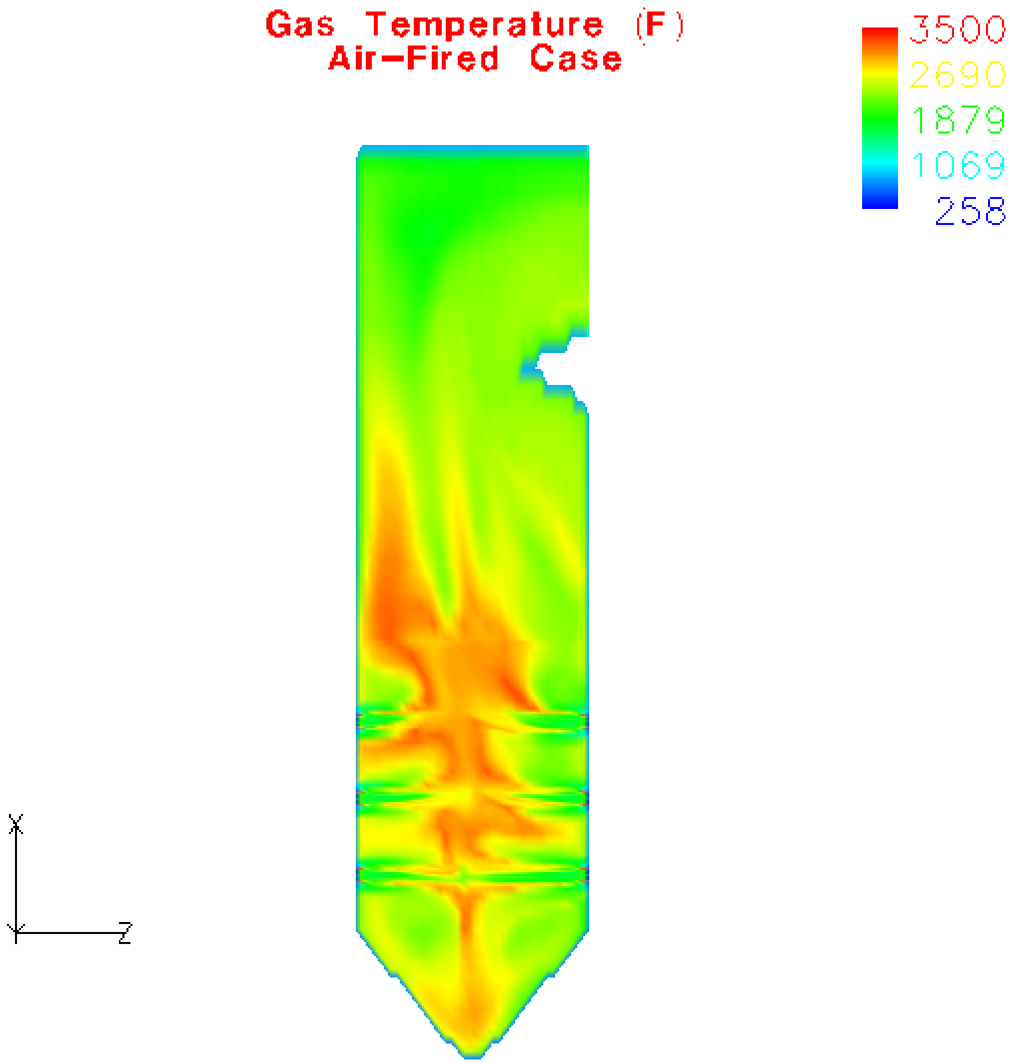

Figure 4.13 – O_2 Mole Fraction for Air-Fired Case

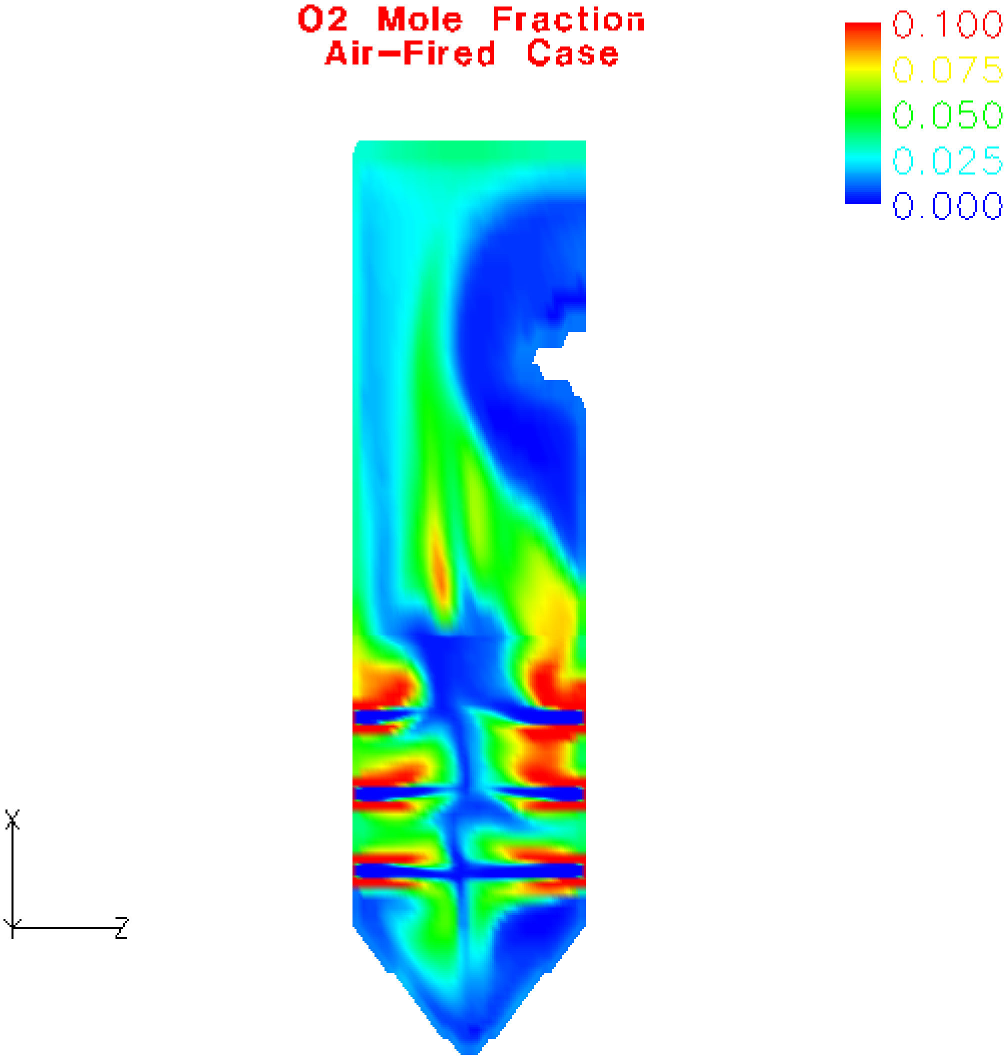

Figure 4.14 – Wall Heat Flux for Air-Fired Case

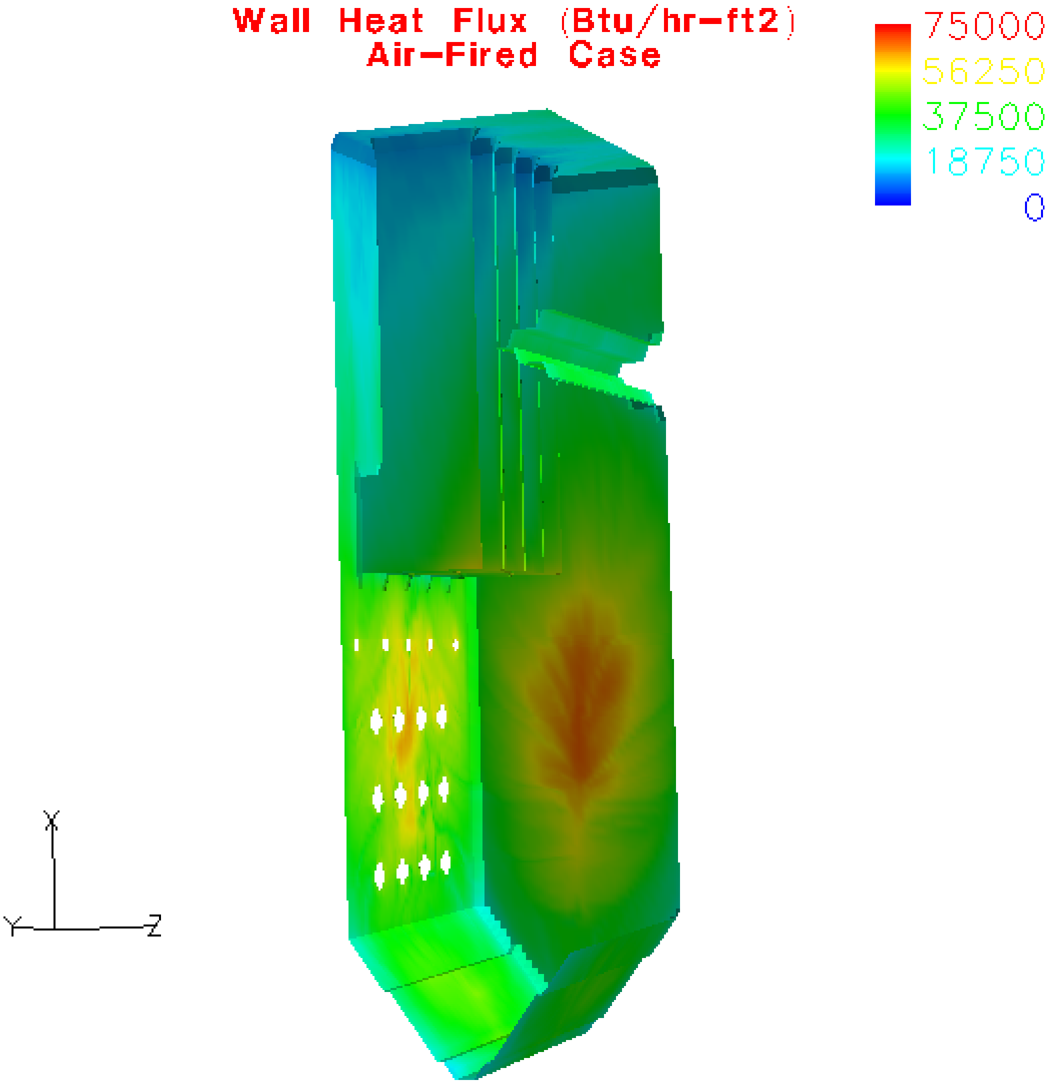

Figure 4.15 – Wall Temperature for Air-Fired Case

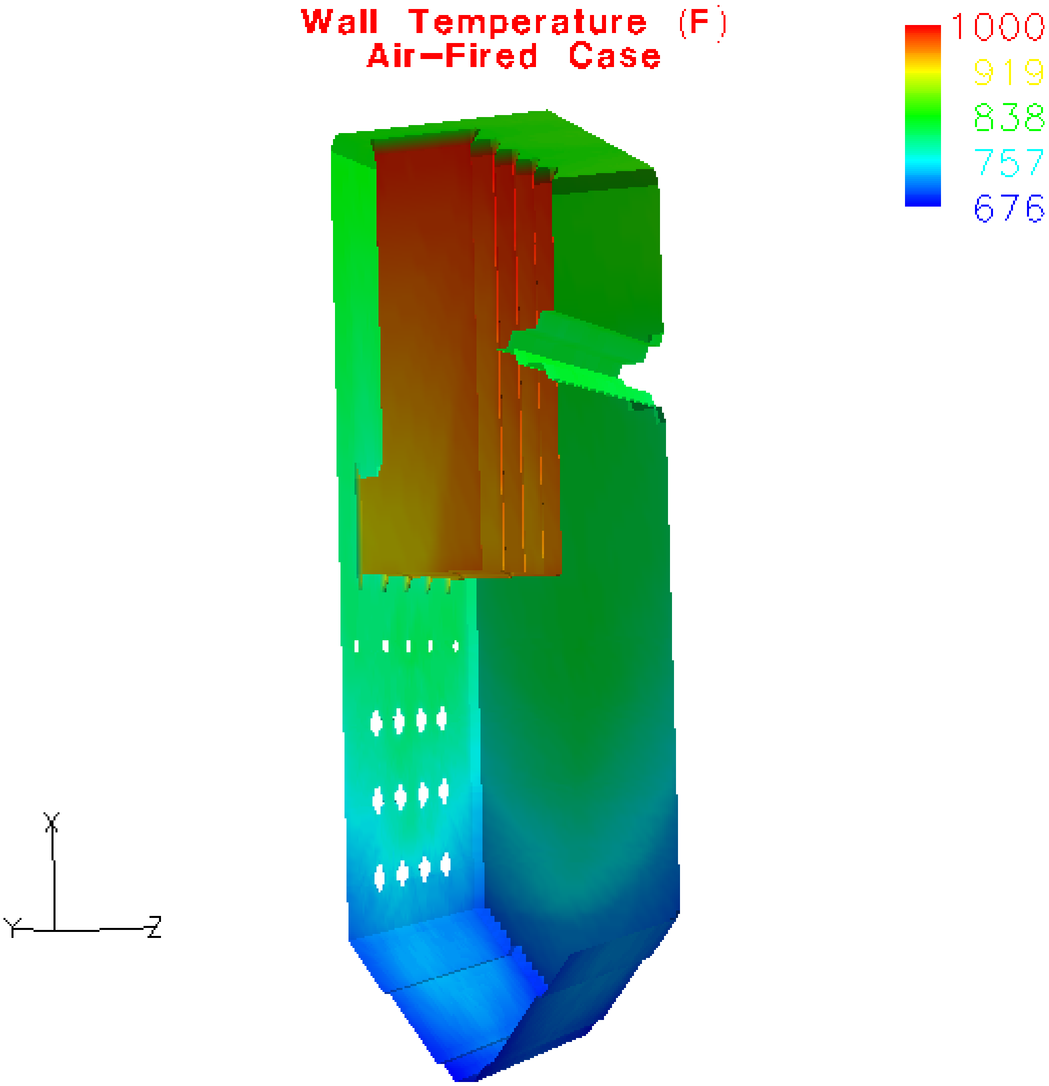

Figure 4.16 – Wall CO for Air-Fired Case

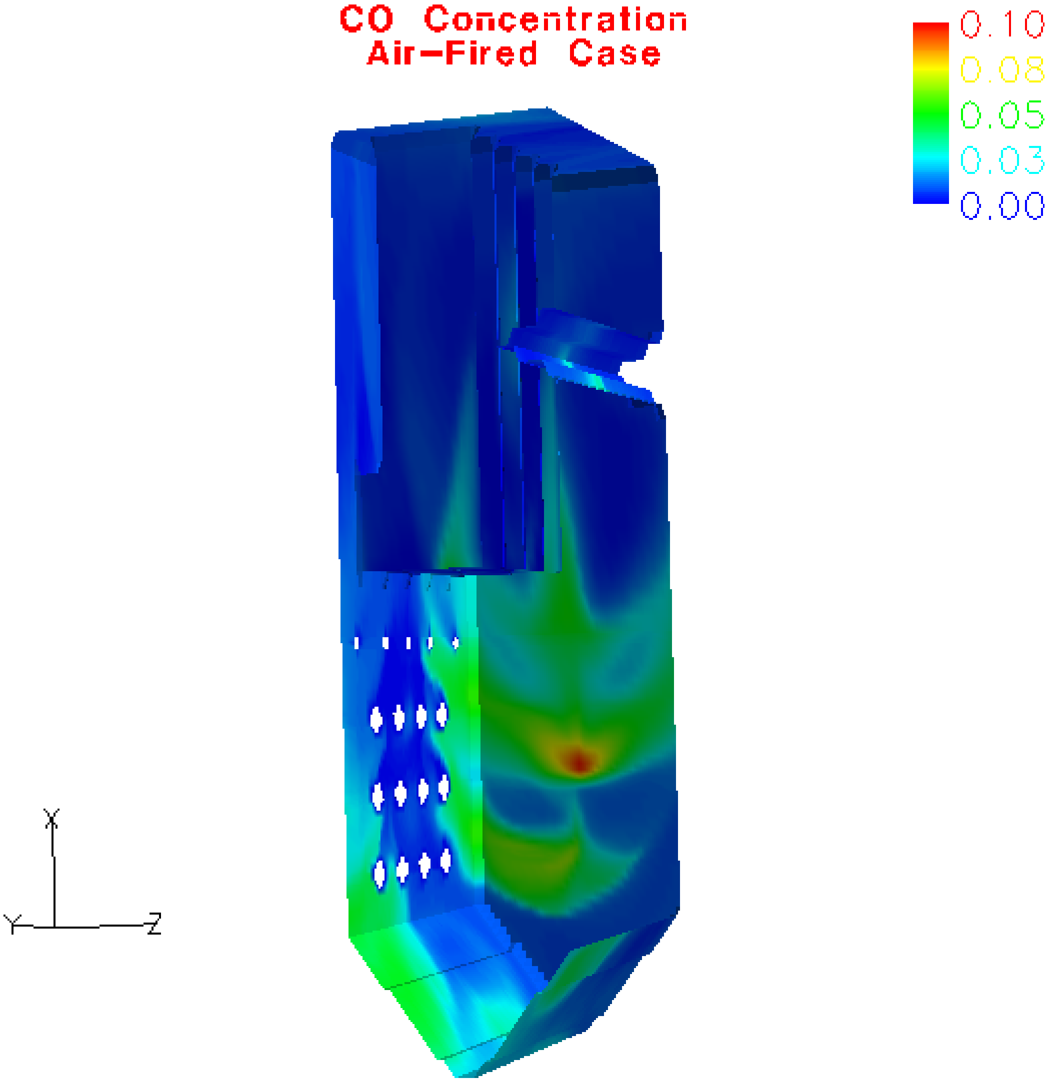

Figure 4.17 – Char Mass Fraction (72 microns) for Air-Fired Case

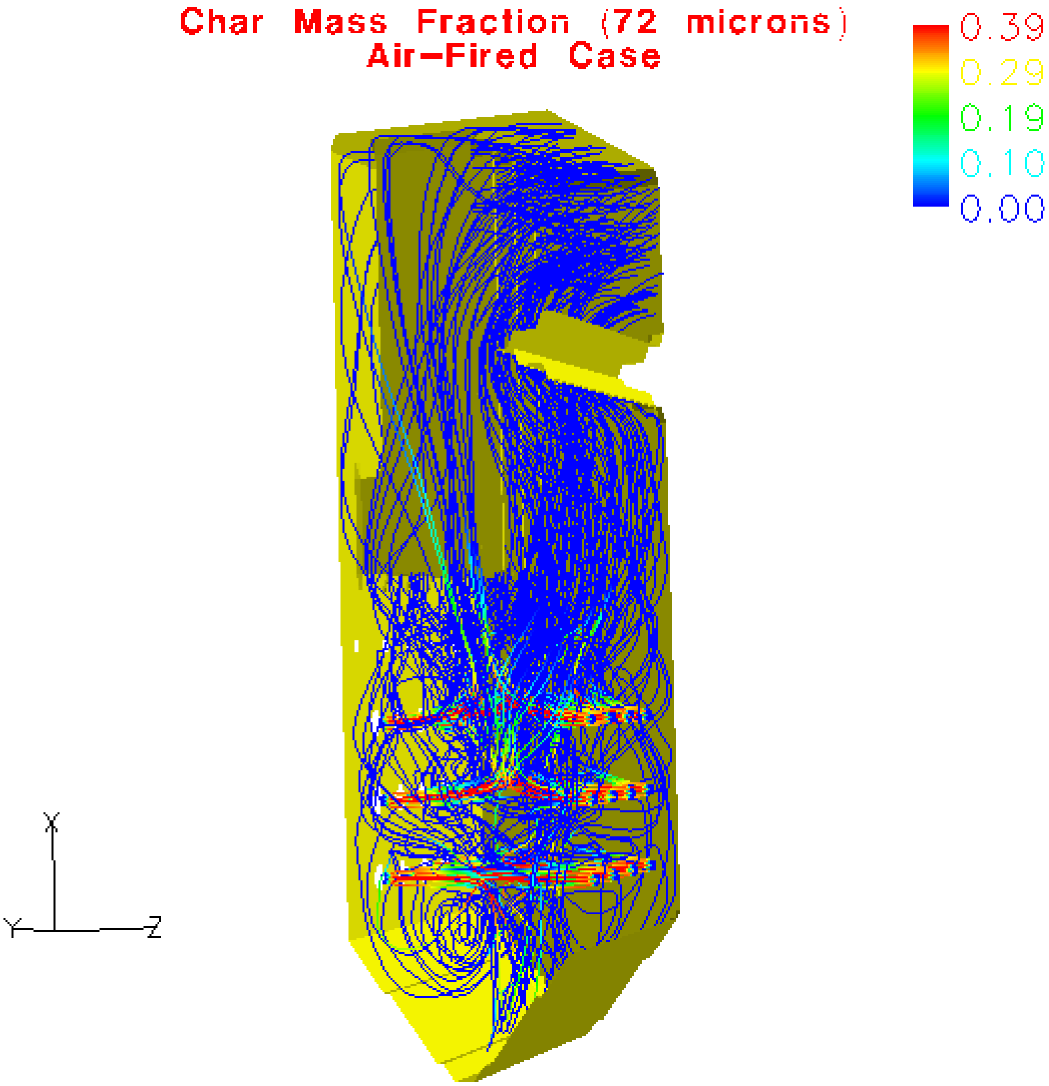

Figure 4.18 – Char Mass Fraction (176 microns) for Air-Fired Case

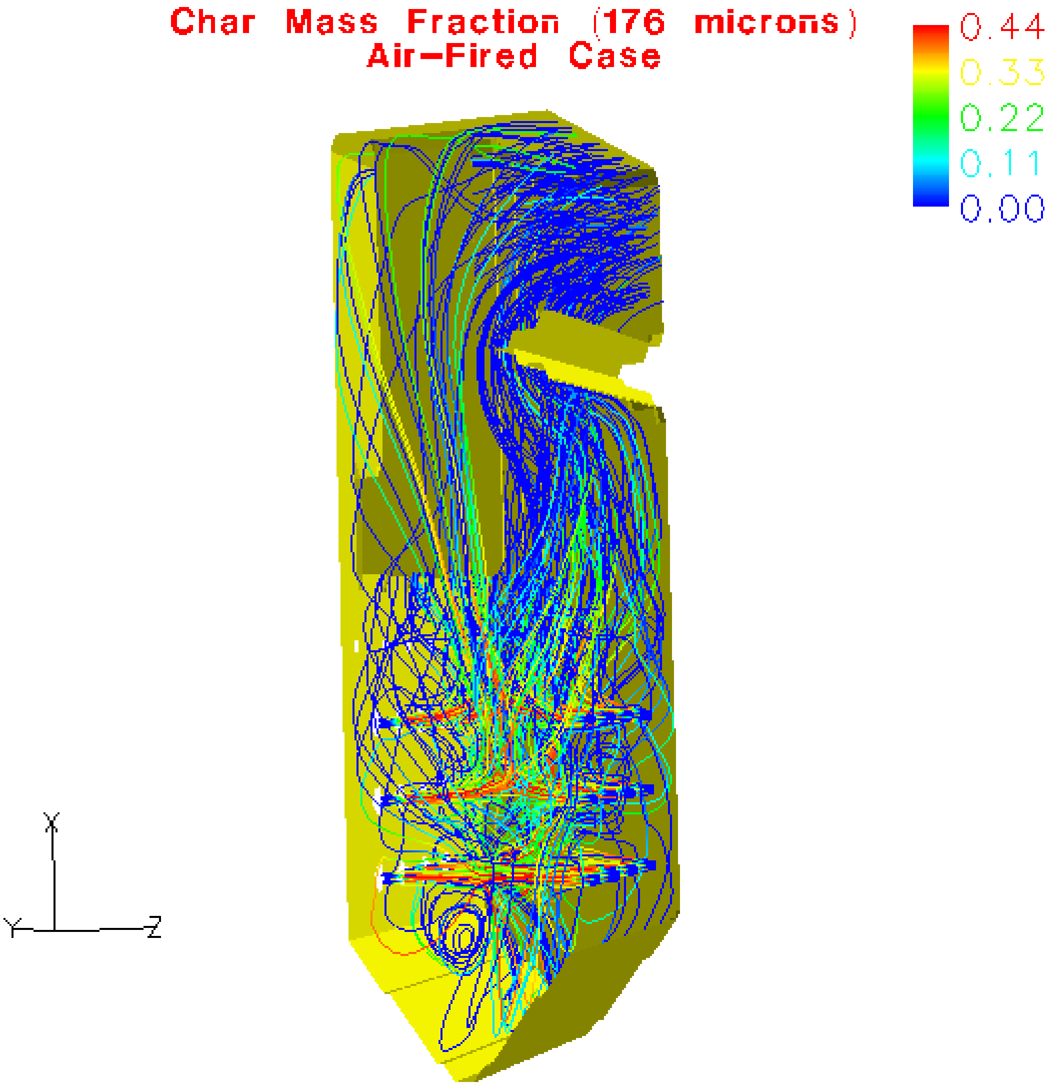

Figure 4.19 – Air-Fired and Oxygen-Fired Boiler Outlines

(Black = Air-Fired, Red = Oxygen Fired)

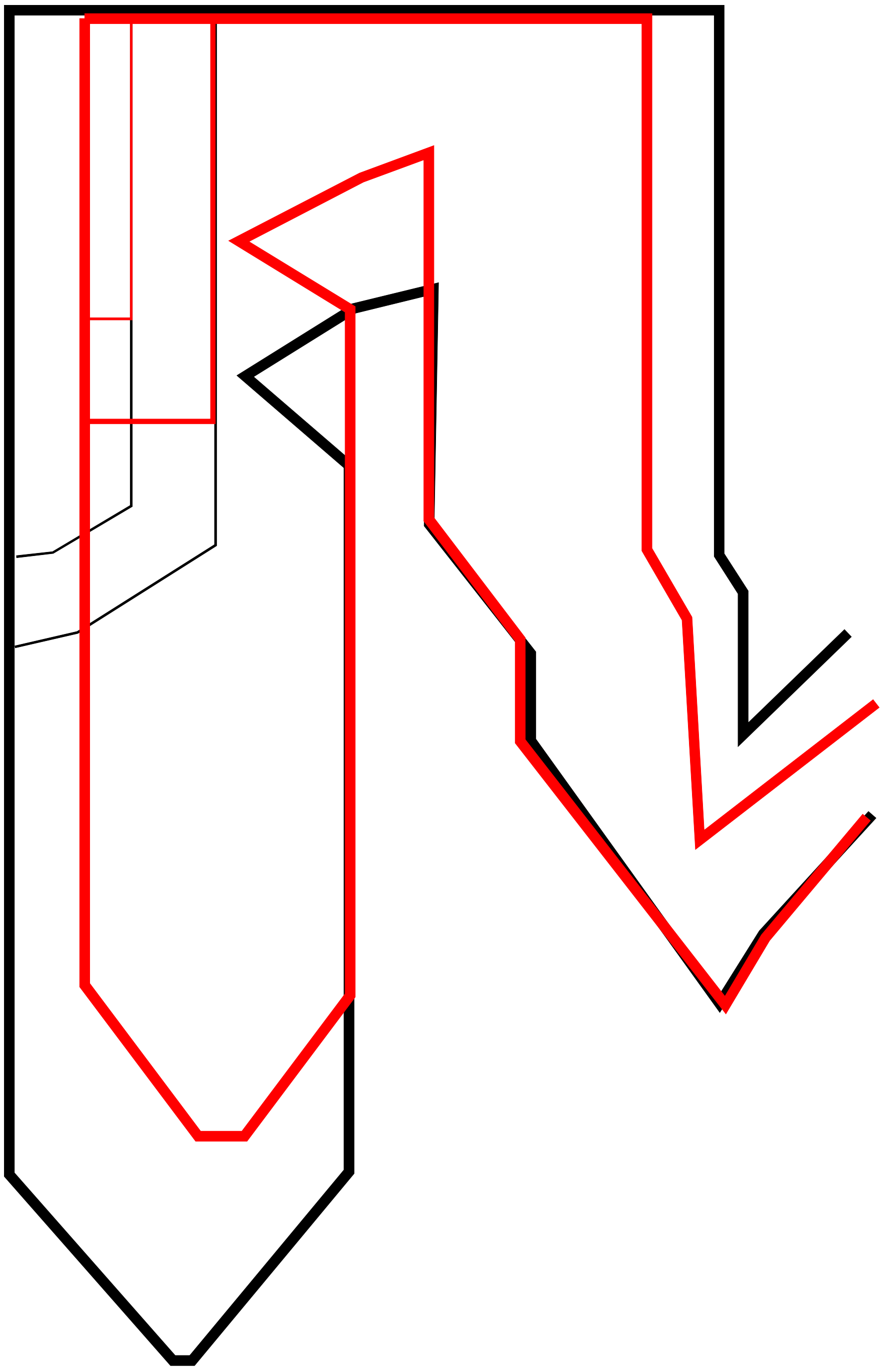

Figure 4.20 – Oxygen-Fired Boiler Design (Cryogenic ASU)

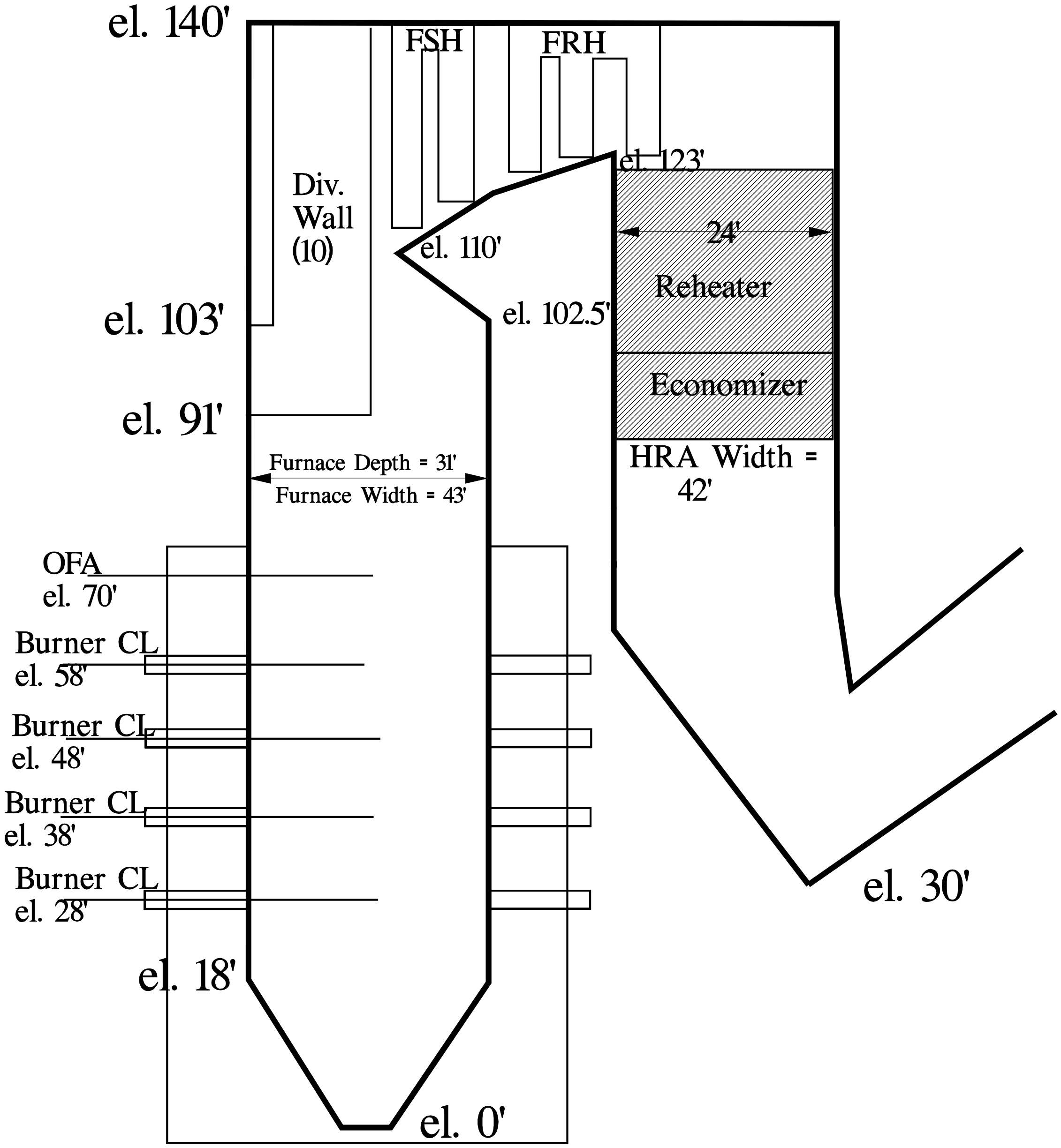

Figure 4.21 – Oxygen-Fired Boiler Design (OITM)

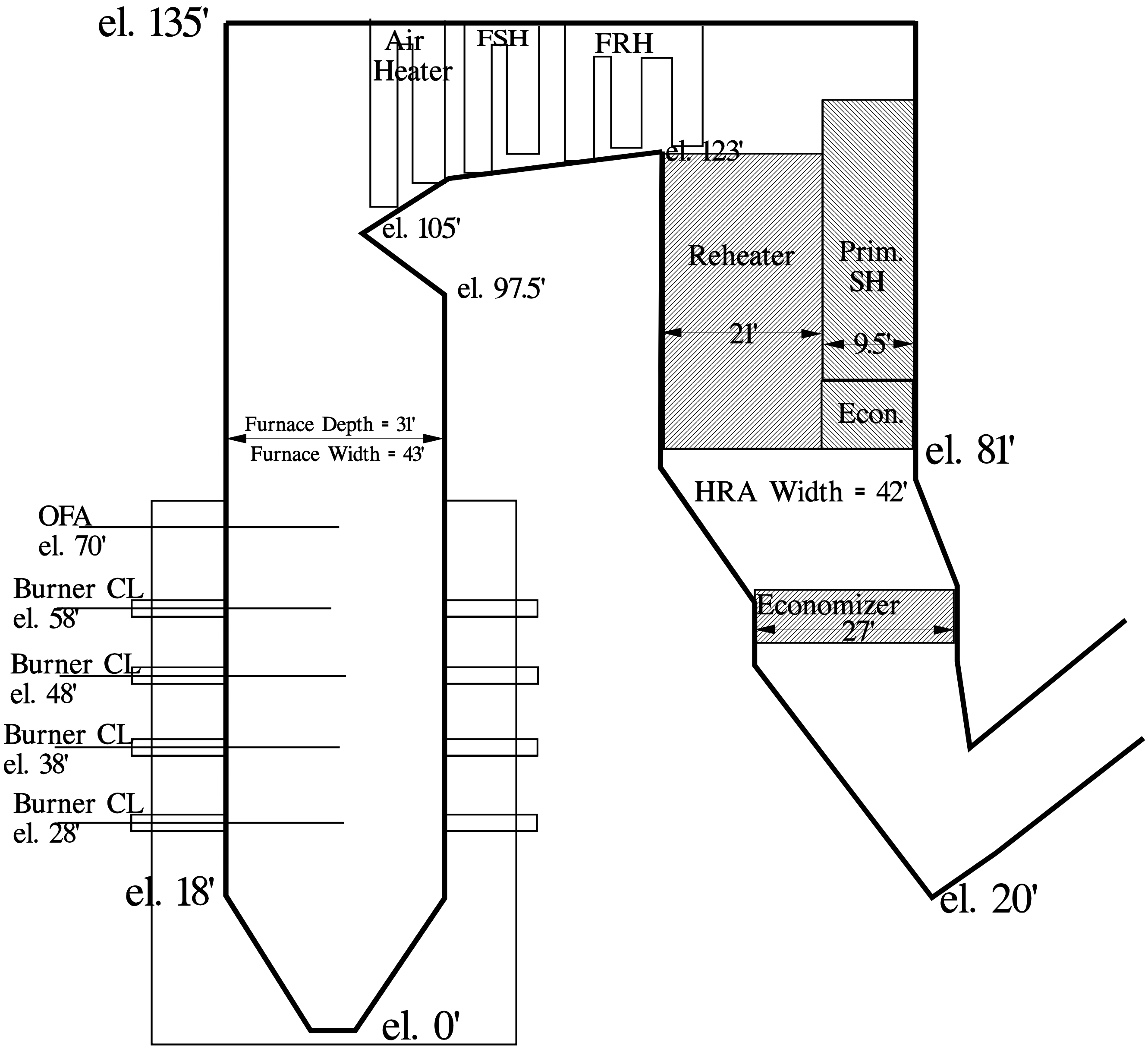

Figure 4.22 – Gas Velocity for O_2-Fired Case

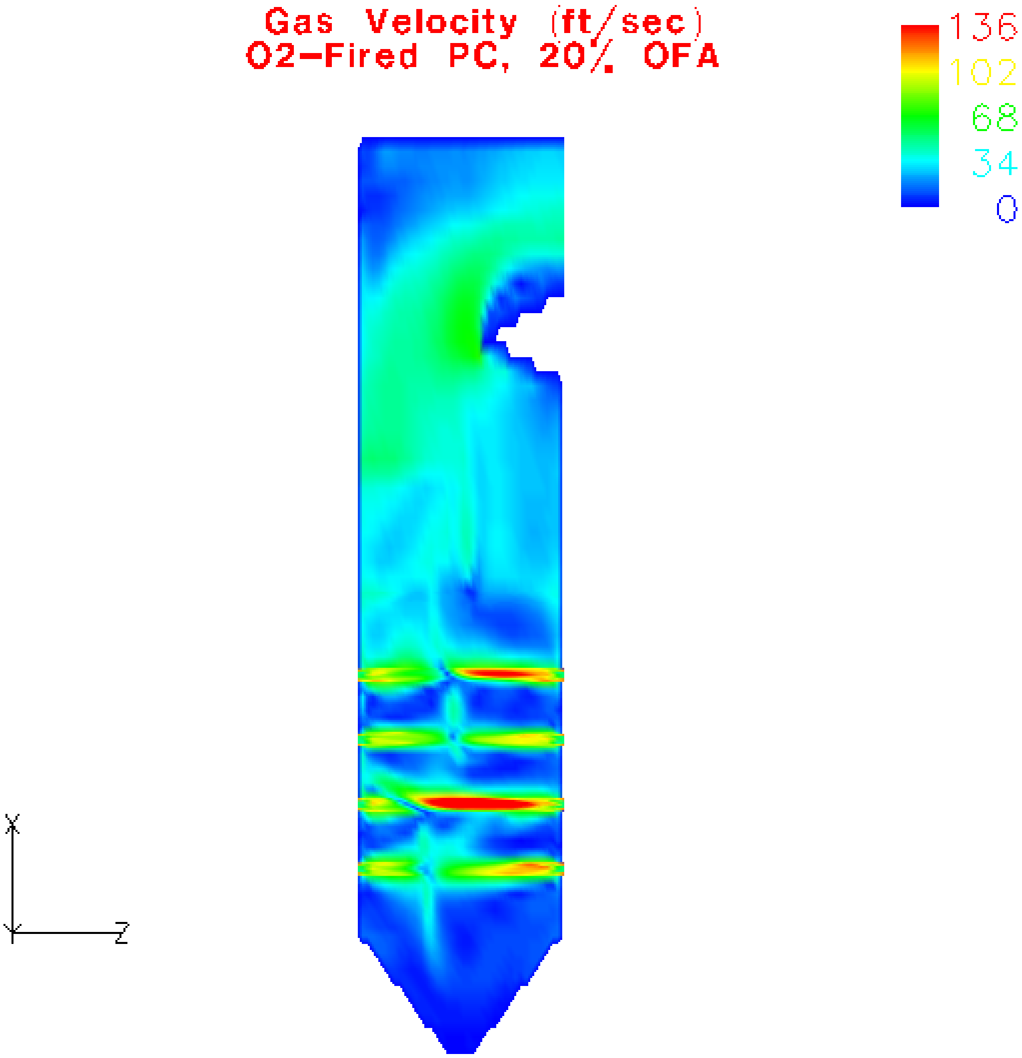

Figure 4.23 – Gas Temperature for O_2-Fired Case

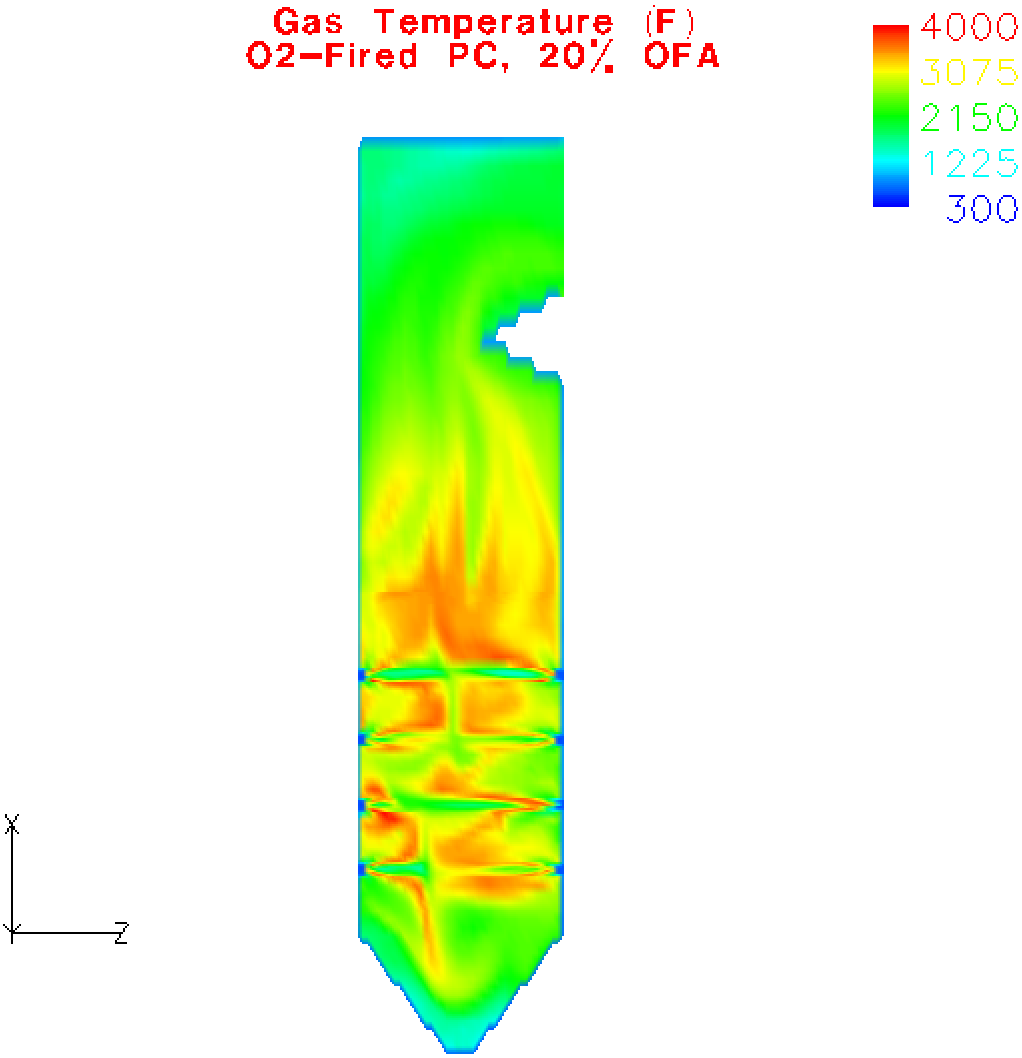

Figure 4.24 – O_2 Mole Fraction for O_2-Fired Case

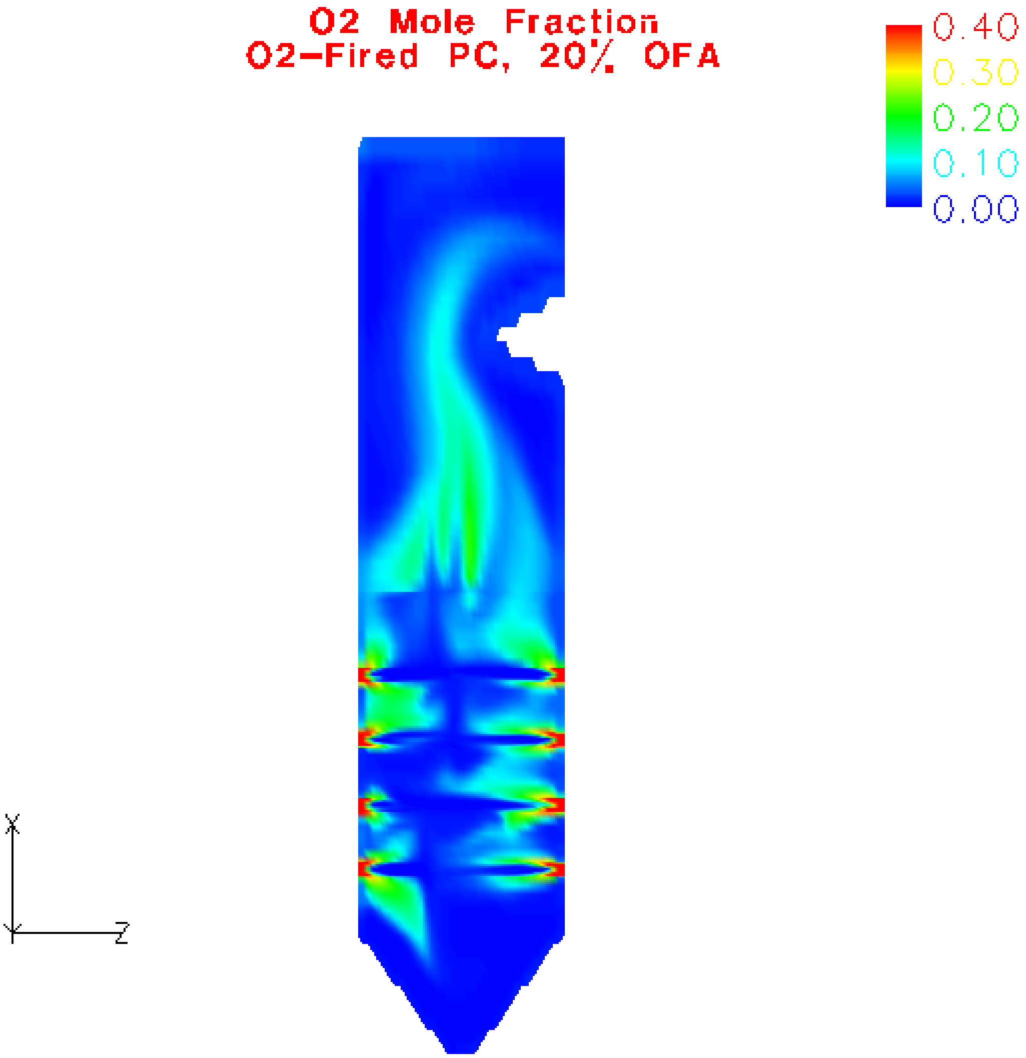

Figure 4.25 – Wall Heat Flux for O_2-Fired Case

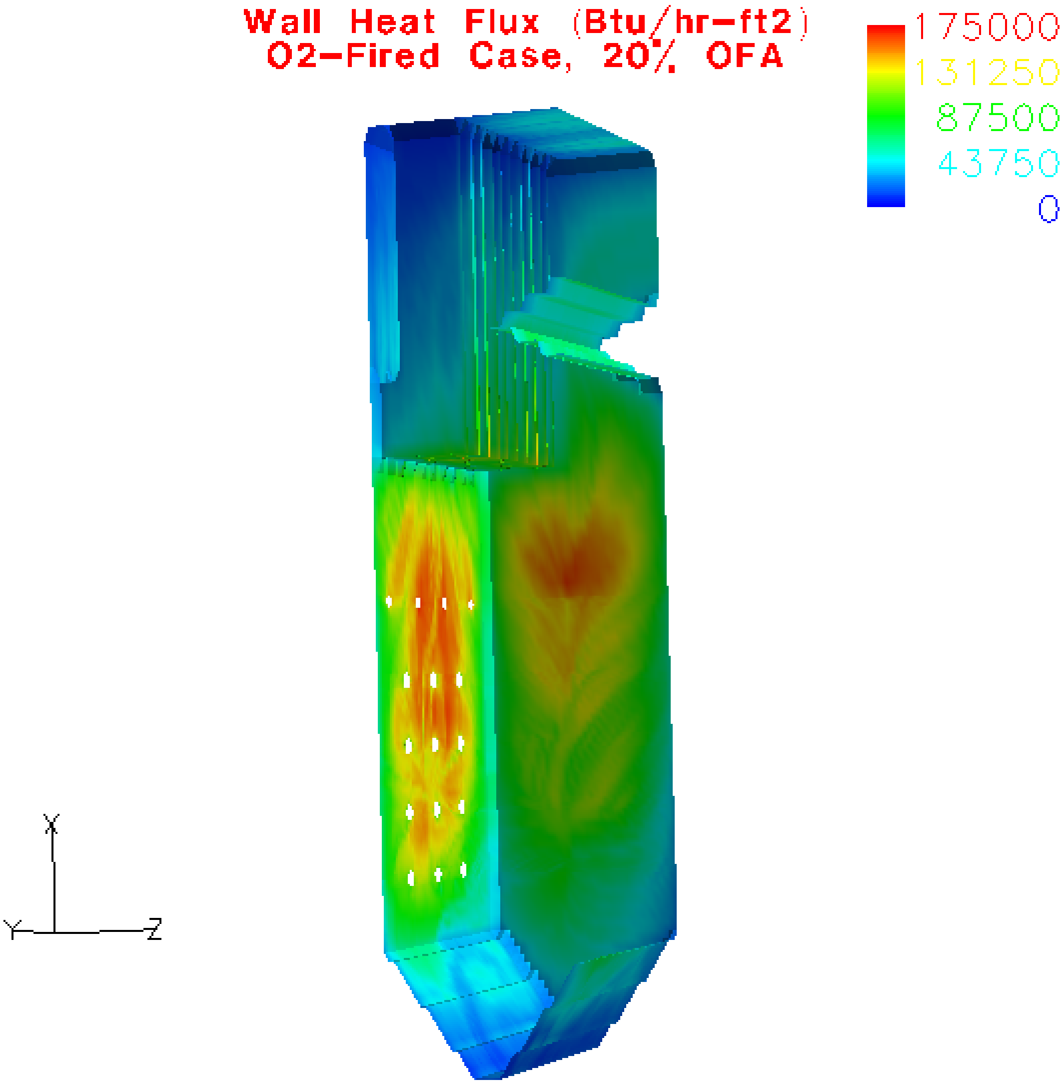

Figure 4.26 – Wall Temperature for O_2-Fired Case

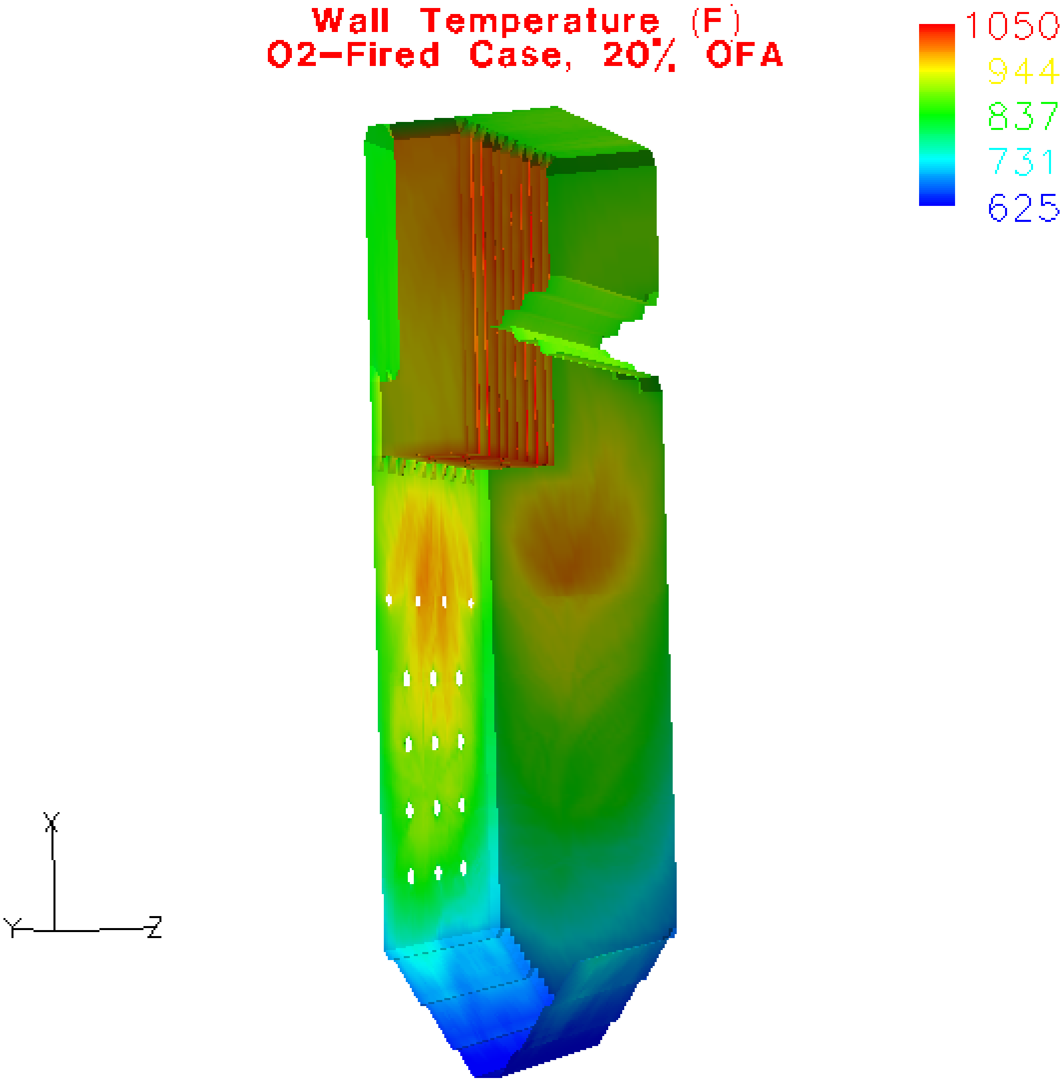

Figure 4.27 – Wall CO for O_2-Fired Case

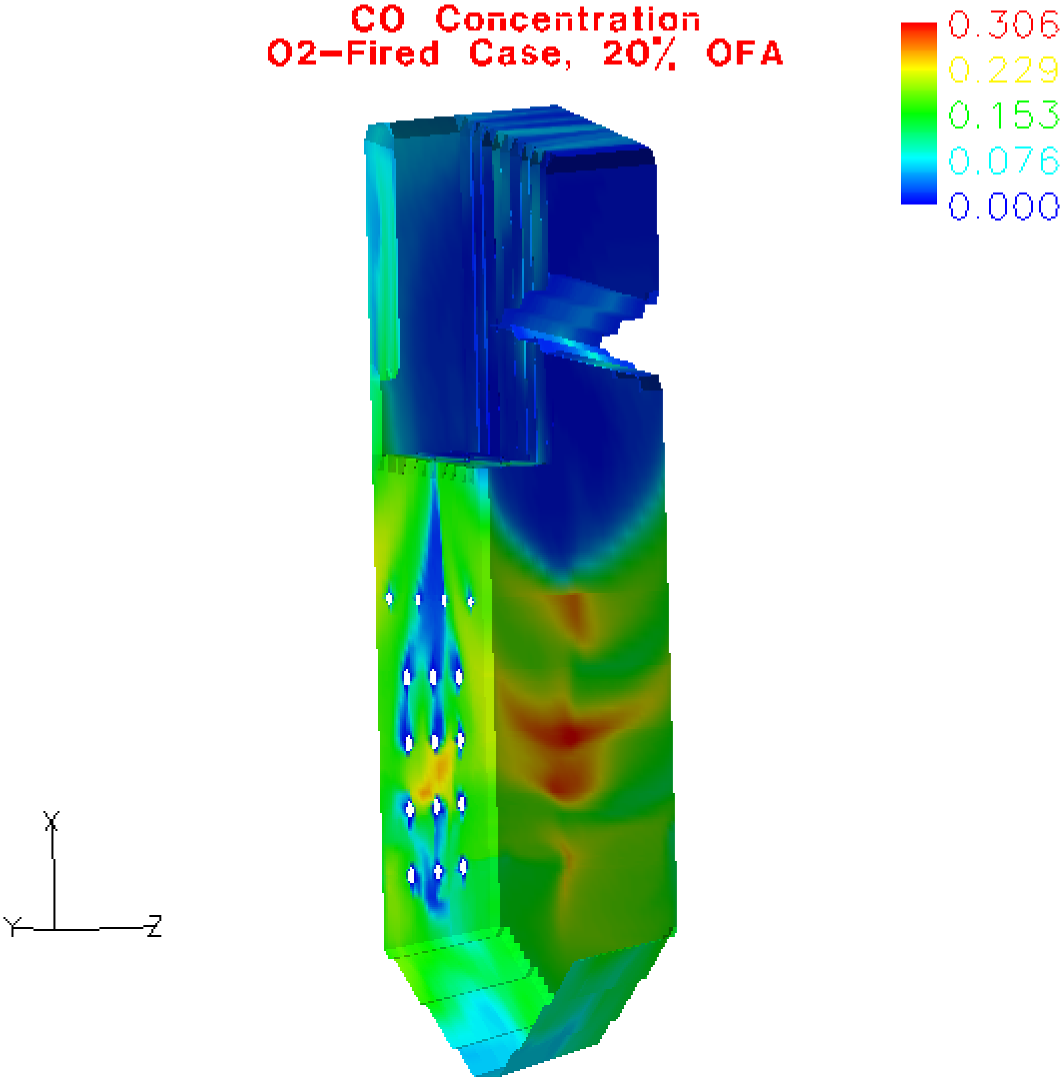

Figure 4.28 – Char Mass Fraction (69 micron) for O_2-Fired Case

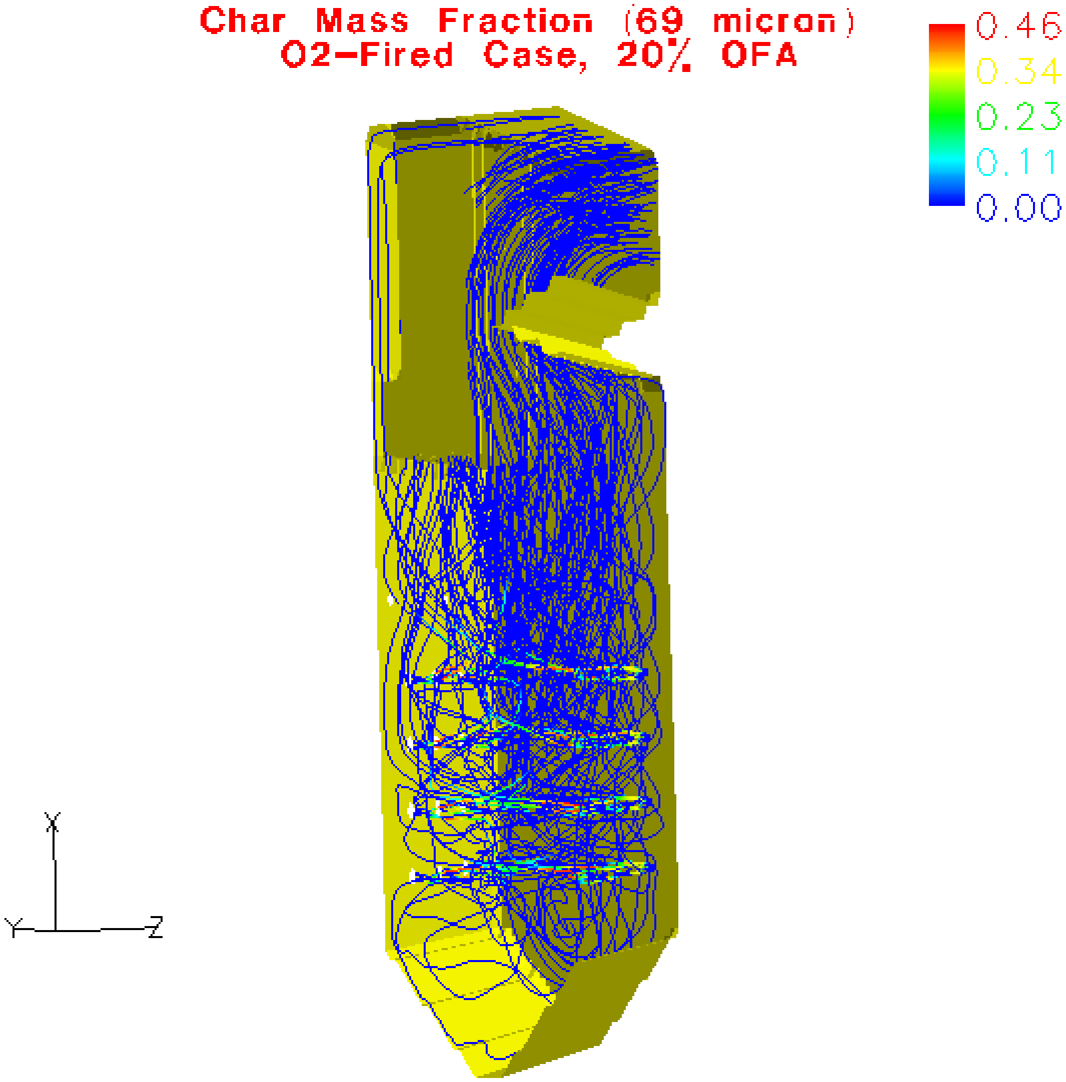

Figure 4.29 – Char Mass Fraction (169 micron) for O_2-Fired Case

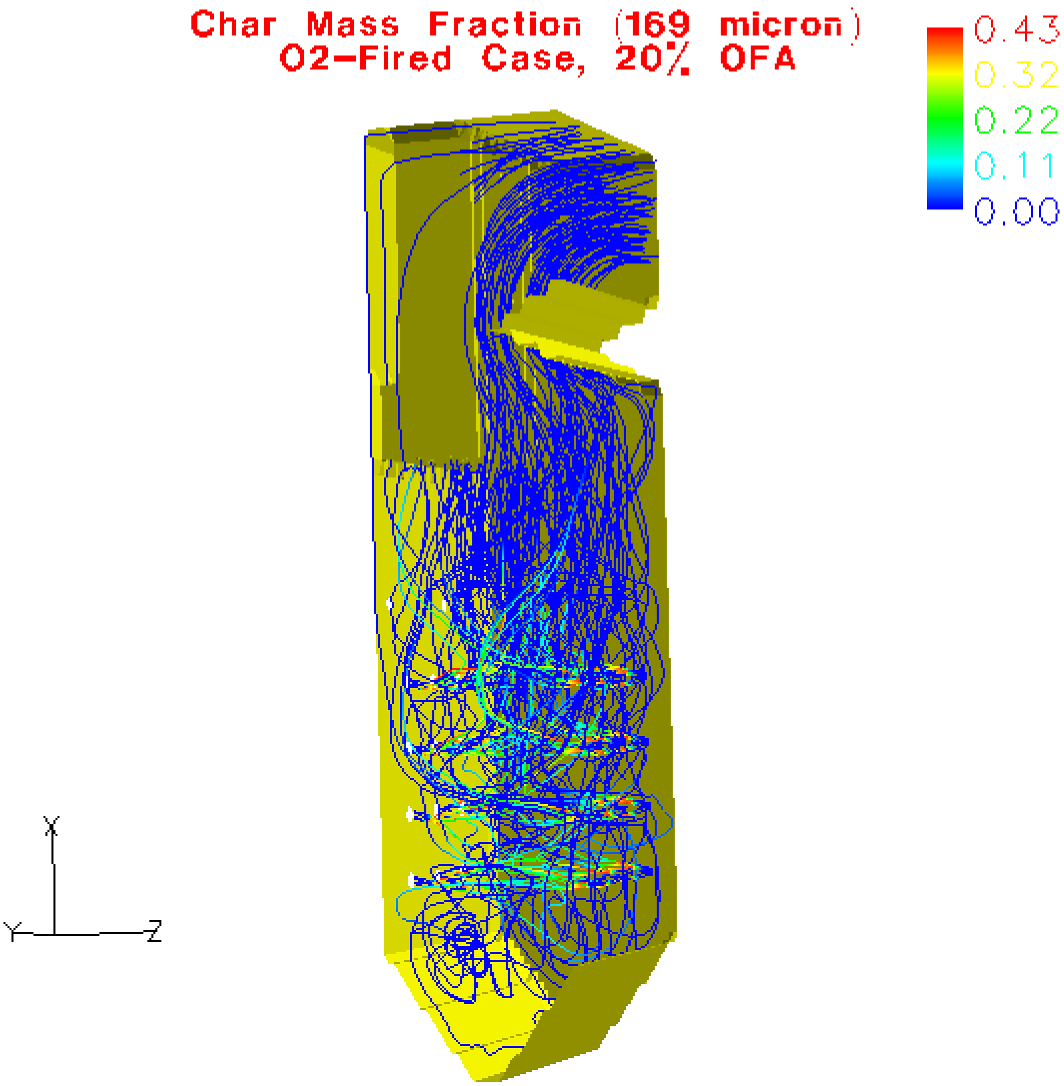

Figure 4.30 - Flue gas recycle flow vs. part load operation

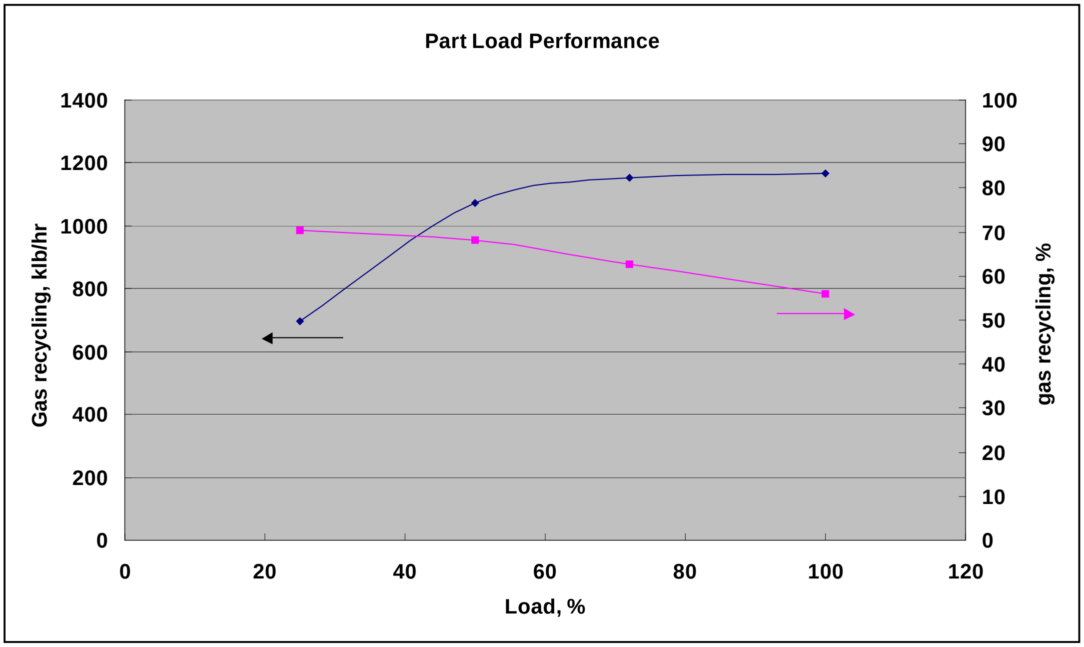

Figure 4.31 – Summary of O_2-Fired Part Load Results, Cryogenic ASU

		100% Load	72% Load	50% Load	25% Load
Burnout	%	100.00	100.00	100.00	99.81
LOI	%	0.00	0.00	0.00	1.48
Total Furnace Absorption	MM Btu/hr	2096	1572	1073	747
Division Wall Absorption	MM Btu/hr	548	380	248	193
FEGT	F	2266	2069	1912	1658

Figure 4.32 – Gas Temperature for O_2-Fired Part Load, Cryogenic ASU

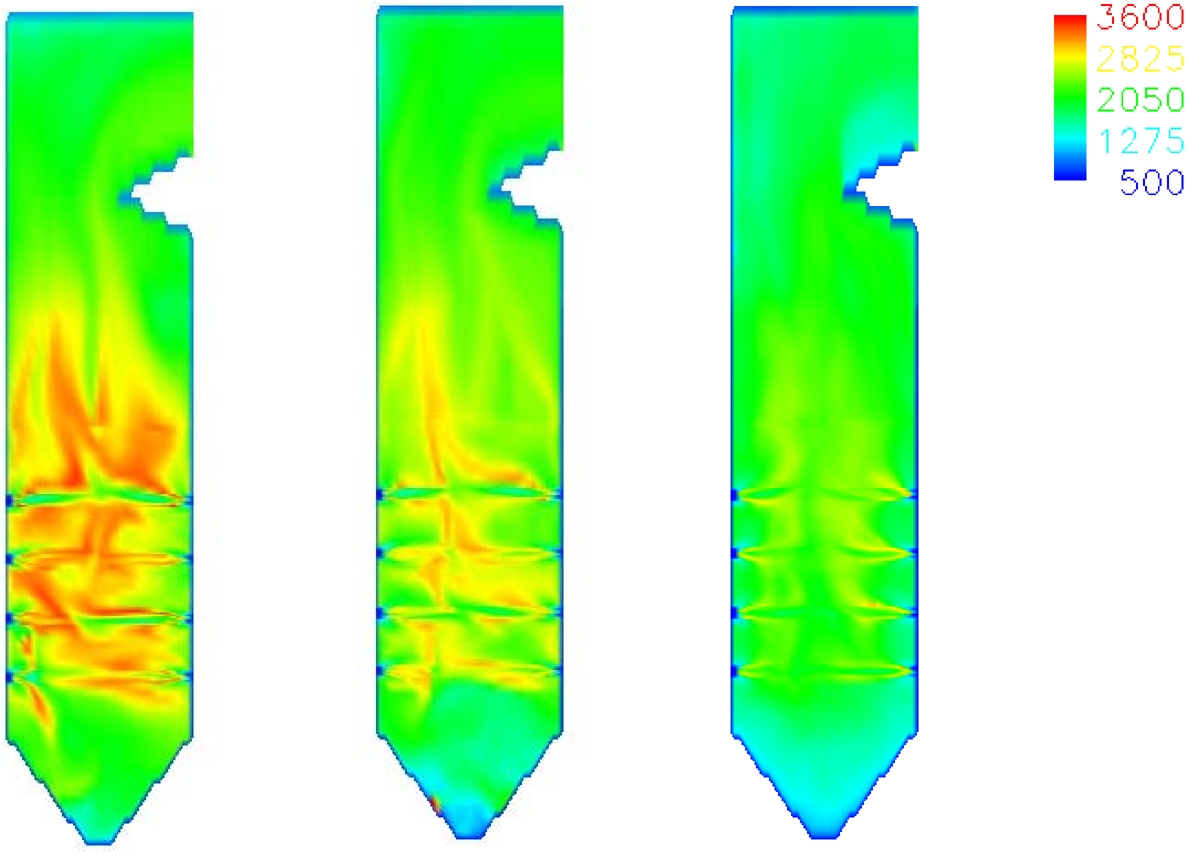

72 % **50 %** **25 %**

Figure 4.33 – Wall Heat Flux for O_2-Fired Part Load, Cryogenic ASU

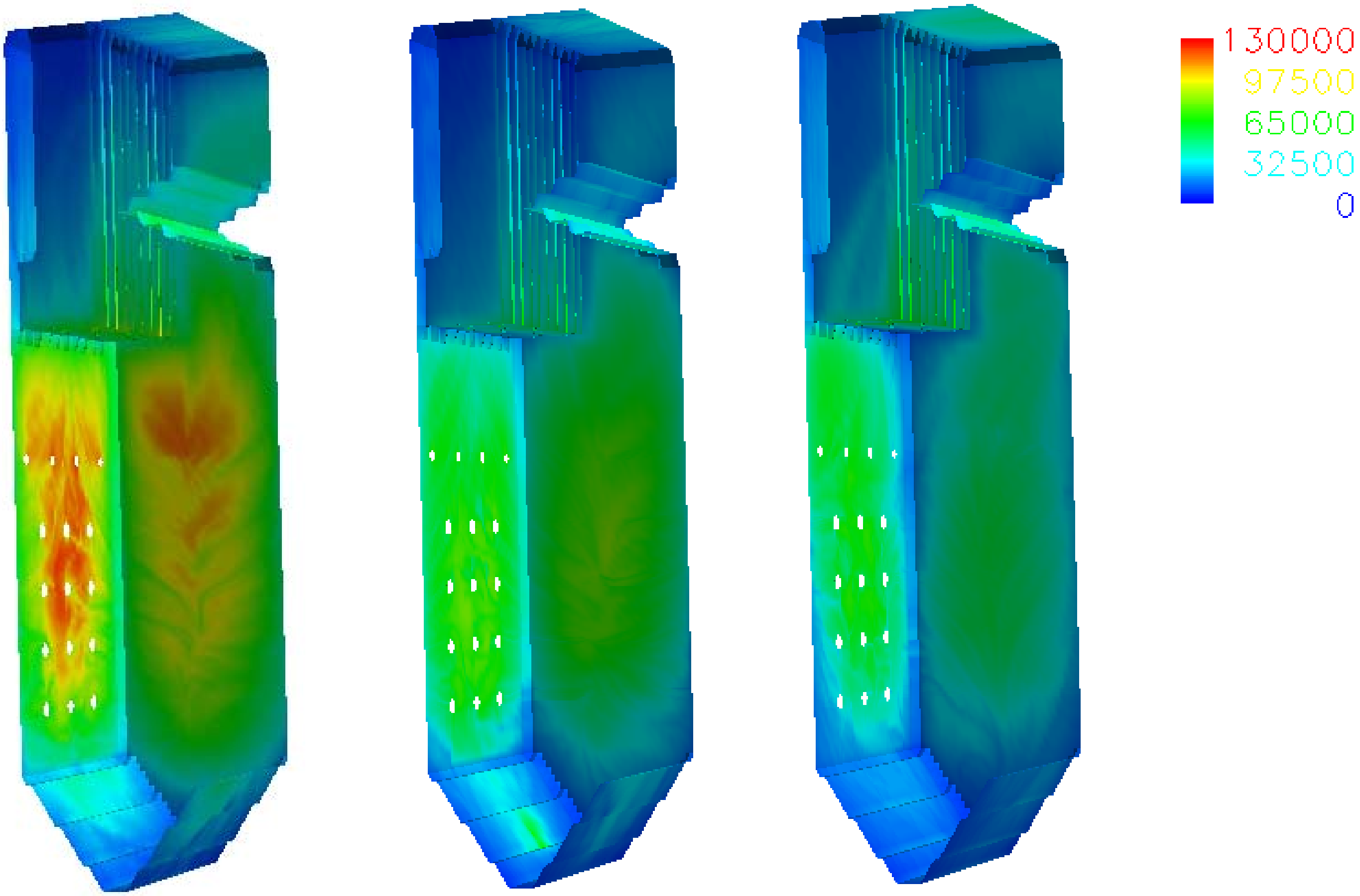

72 % **50 %** **25 %**

Figure 4.34 – Average and Peak Heat Flux in Waterwalls

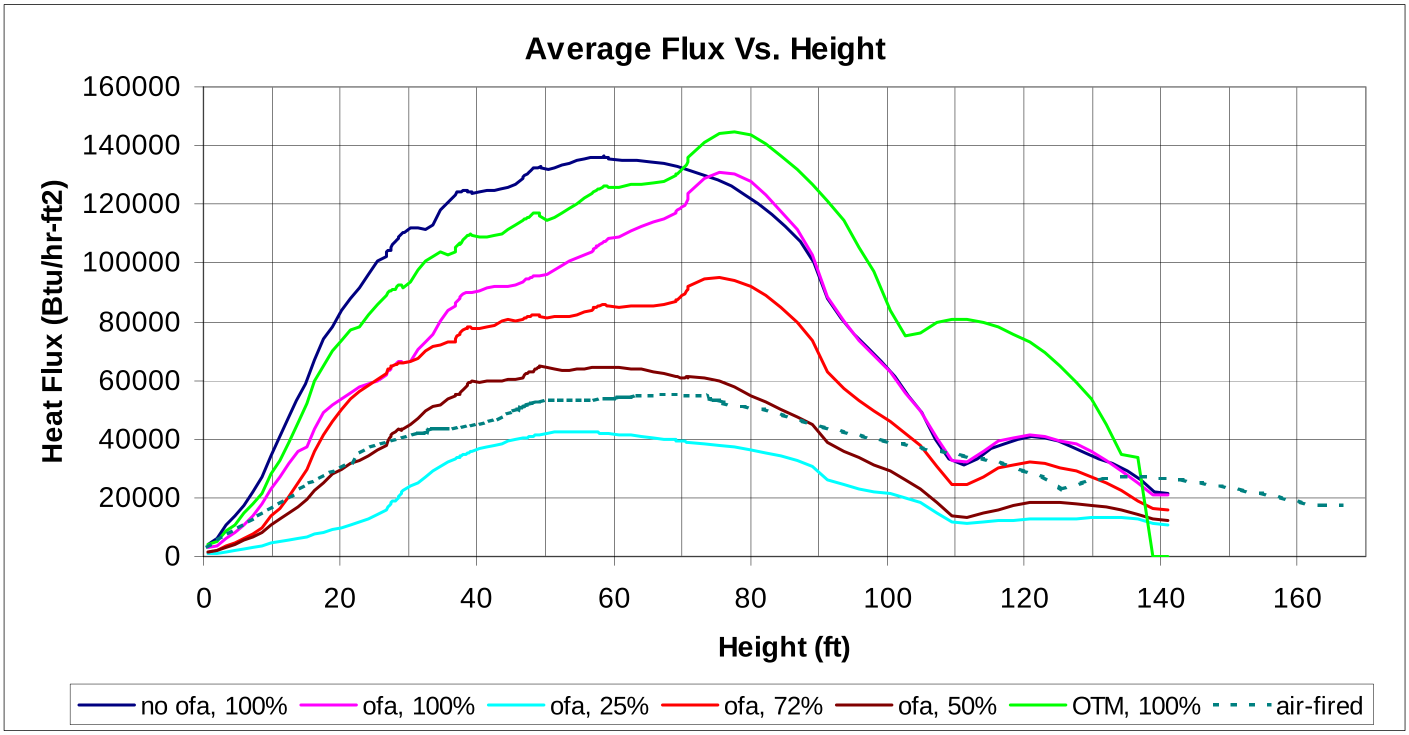

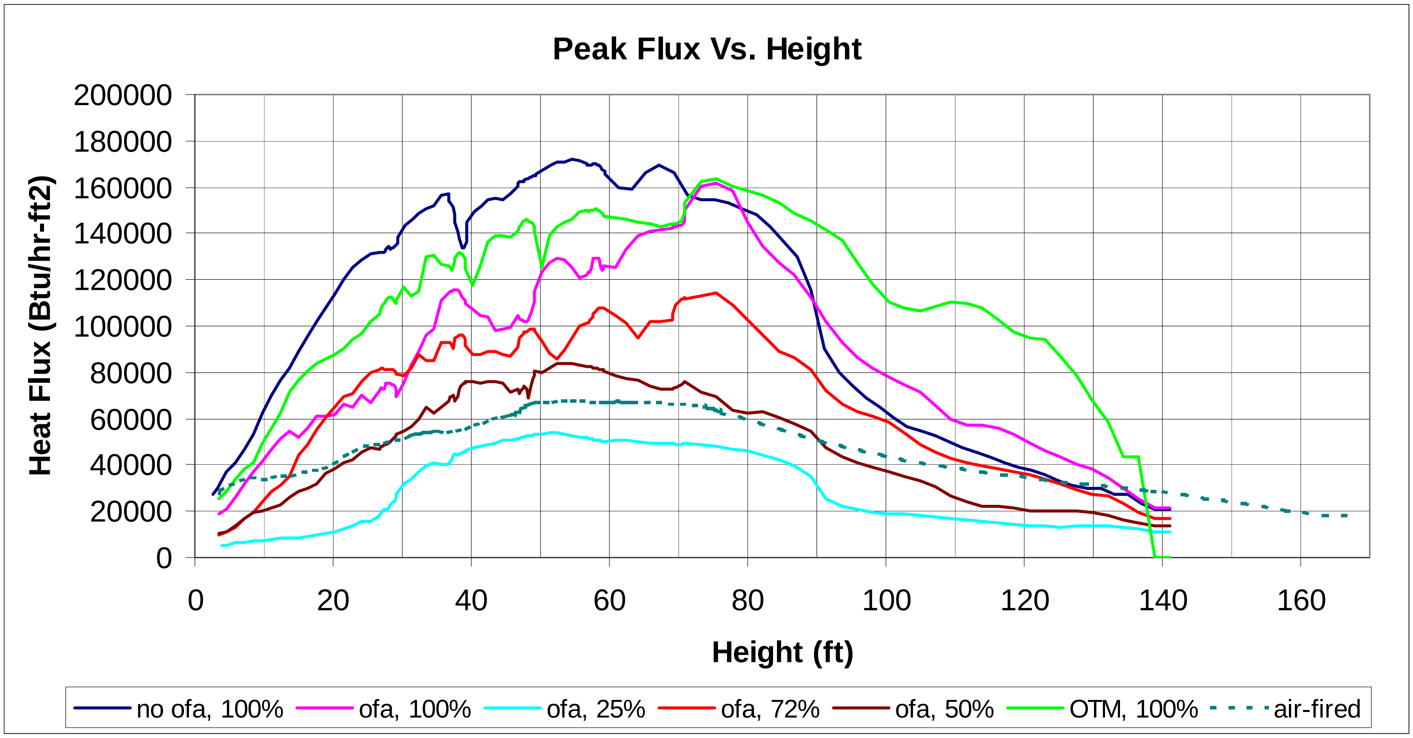

Figure 4.35 – Gas Velocity for O_2-Fired with OITM

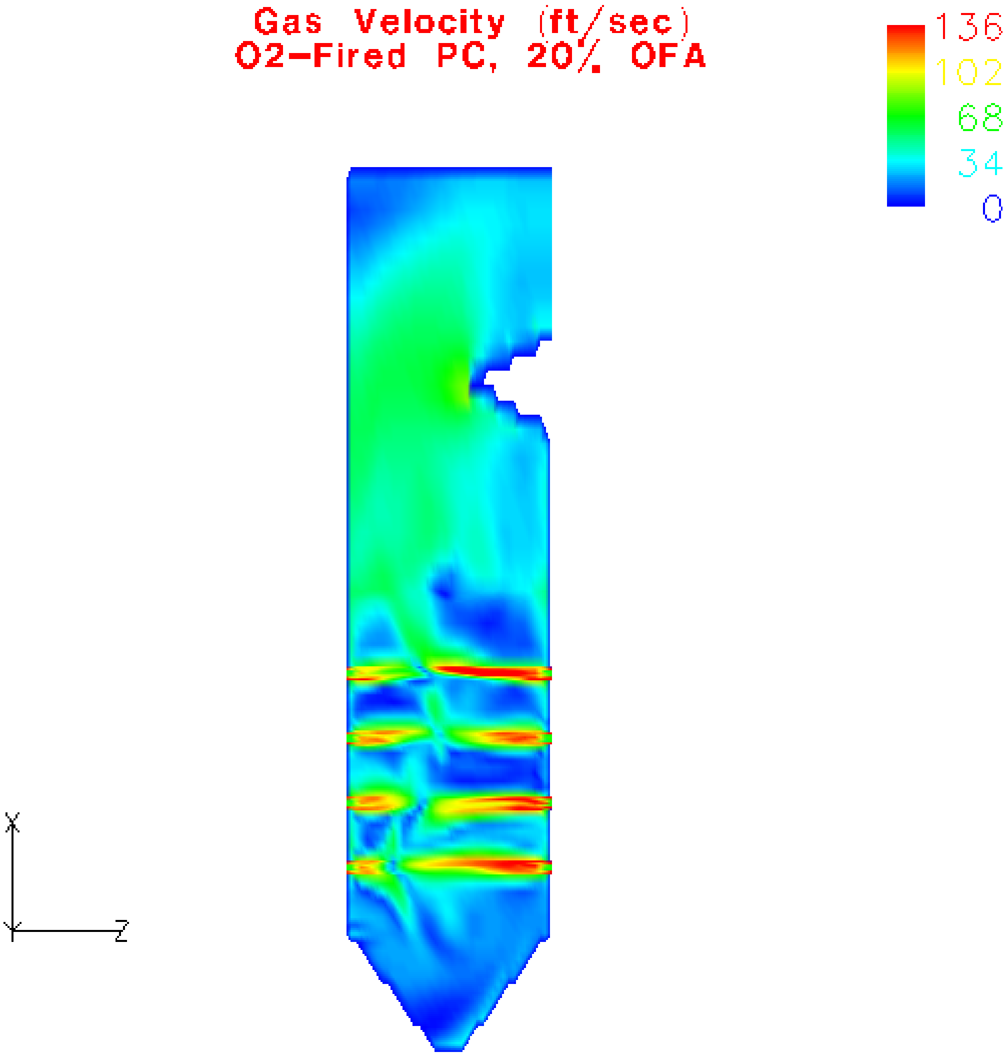

Figure 4.36 – Gas Temperature for O_2-Fired Case With OITM

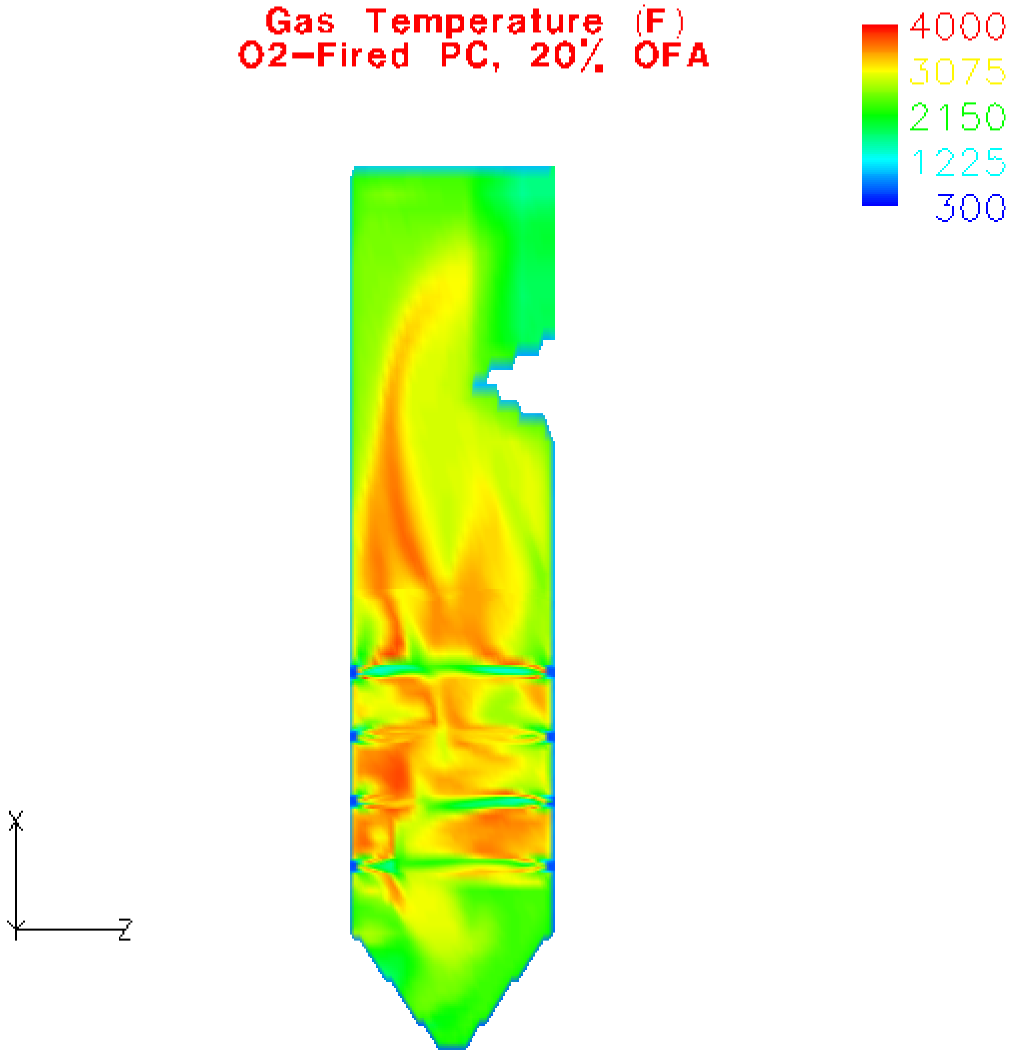

Figure 4.37 – O_2 Mole Fraction for O_2-Fired Case With OITM

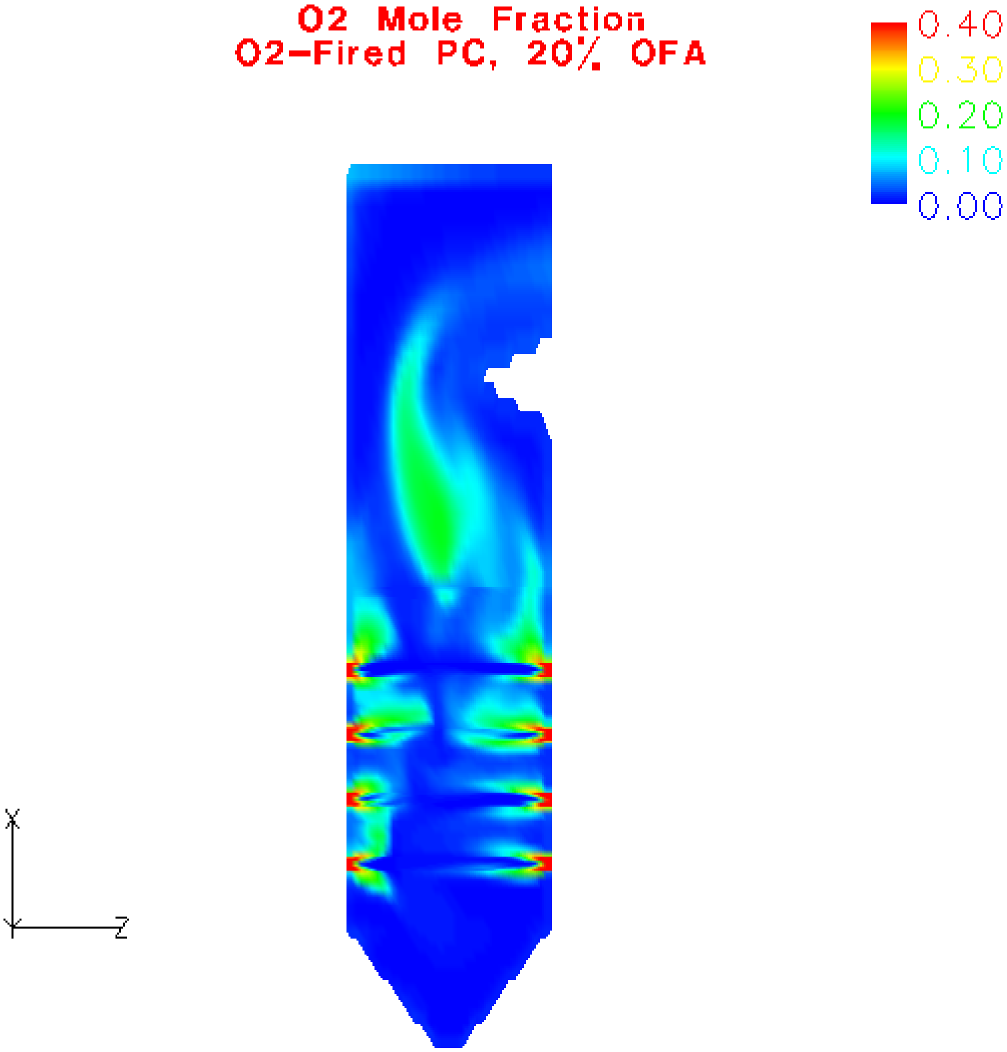

Figure 4.38 – Wall Heat Flux for O_2-Fired Case With OITM

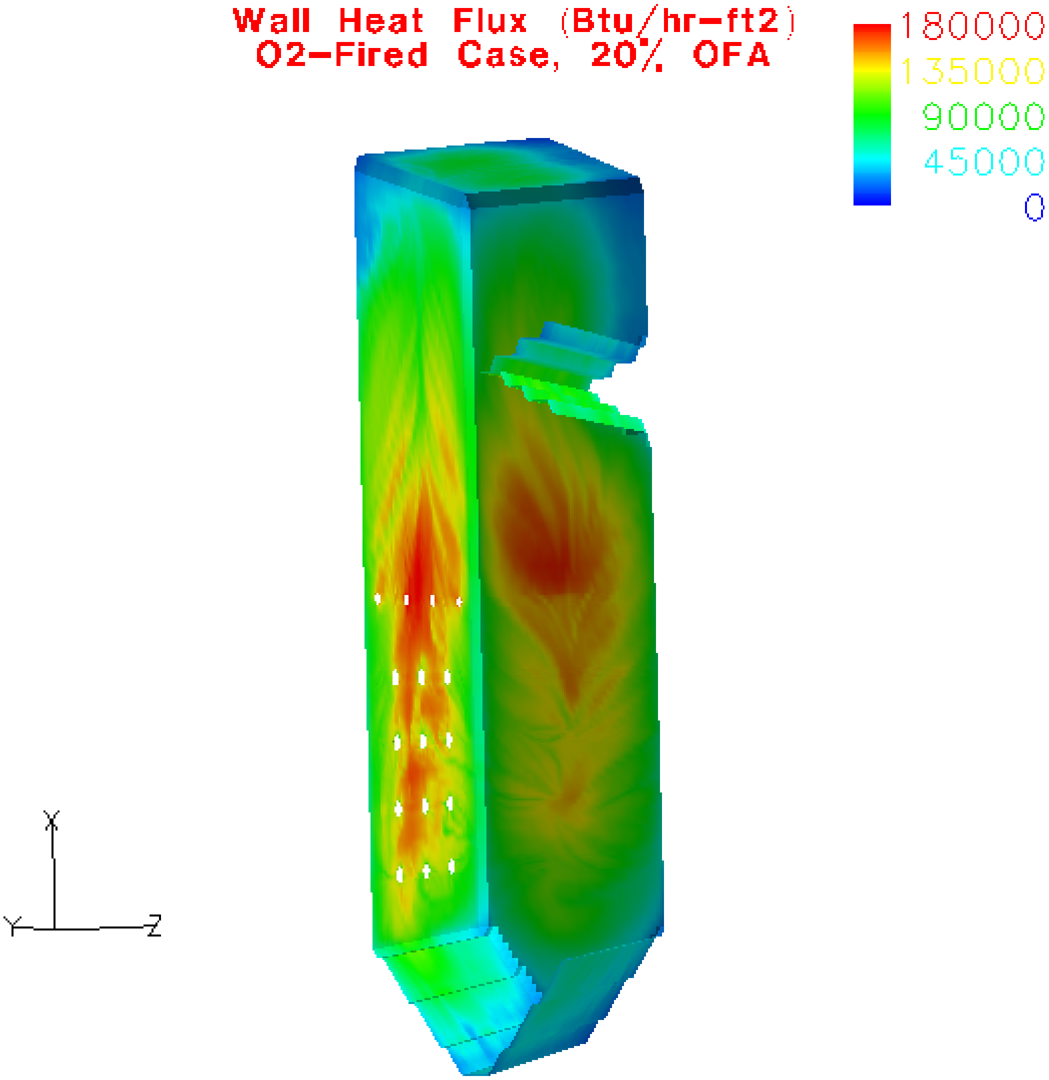

Figure 4.39 – Wall Temperature for O_2-Fired Case With OITM

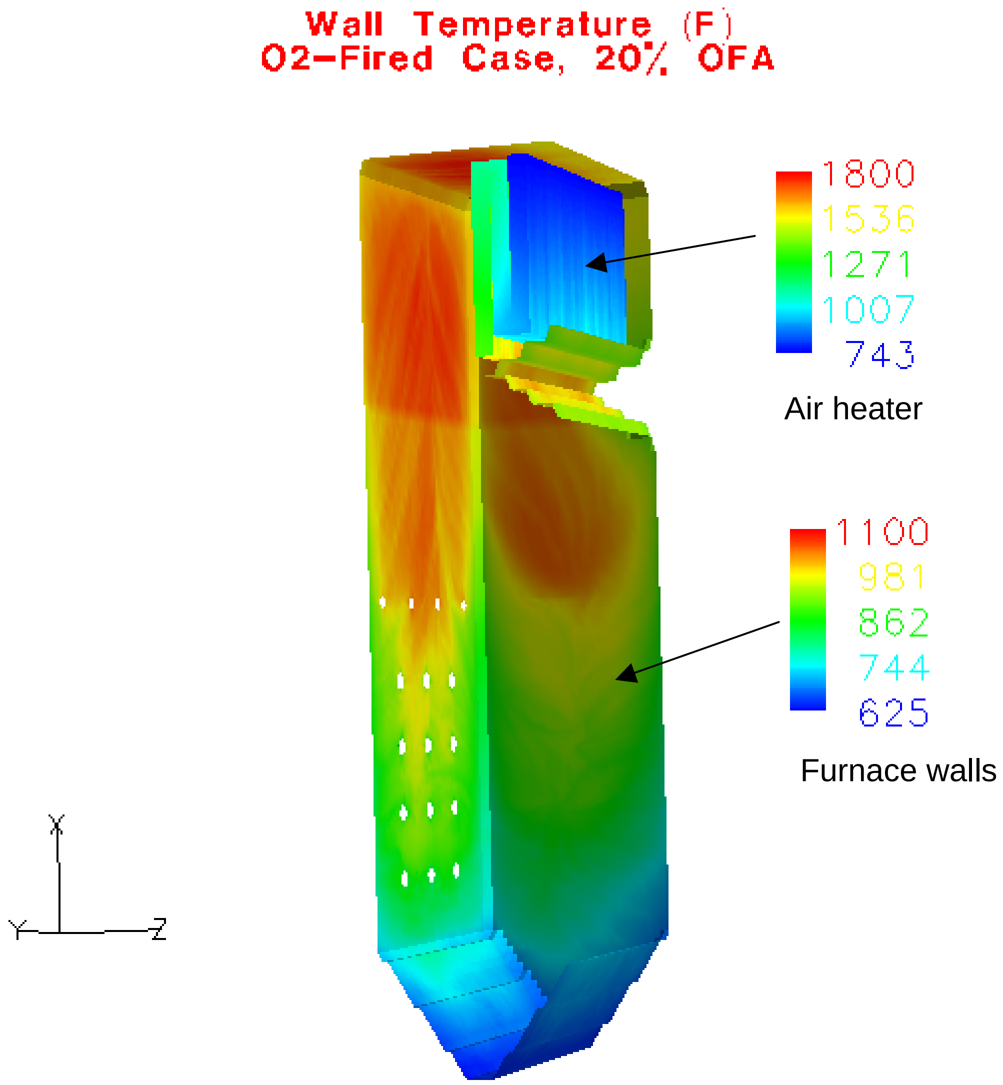

Figure 4.40 – Wall CO for O_2-Fired Case With OITM

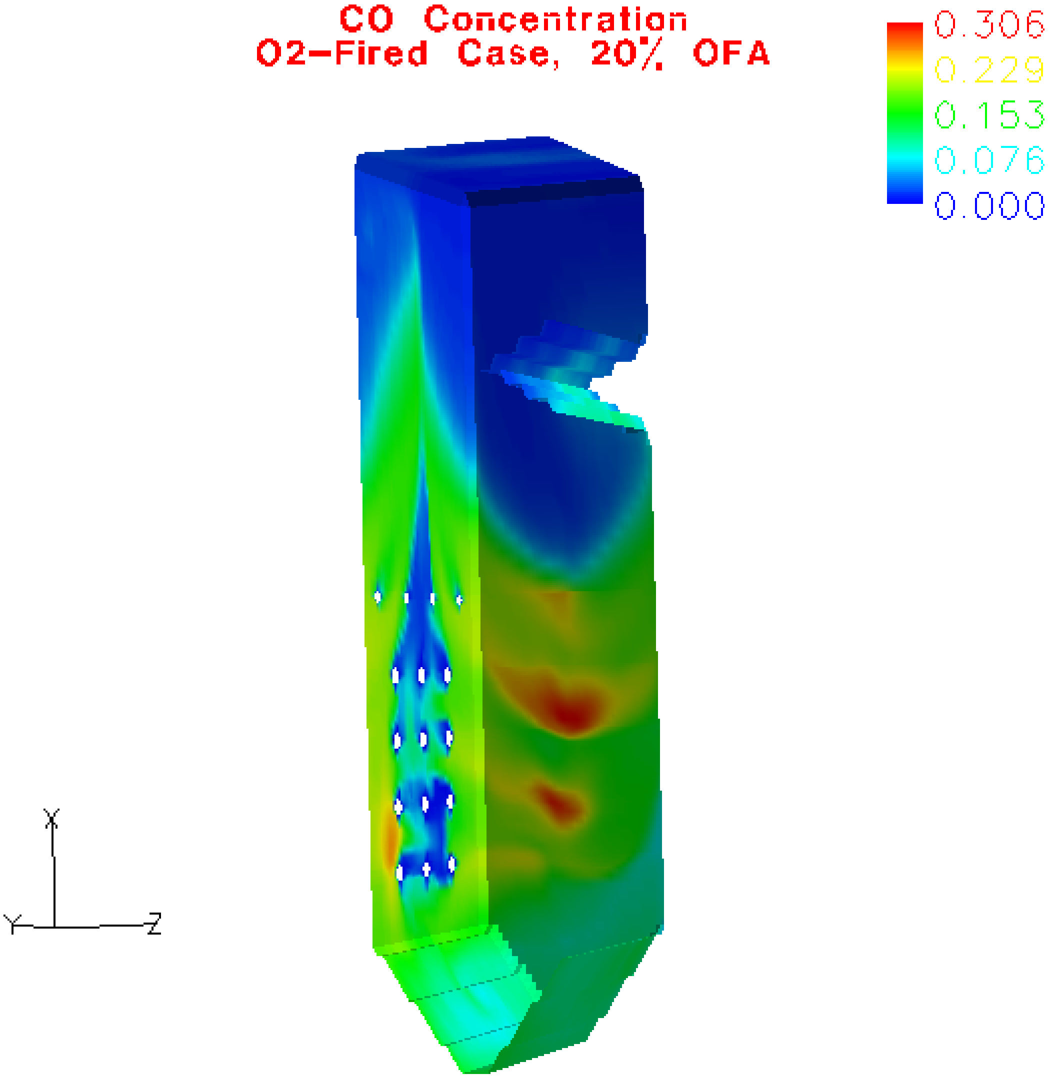

Figure 4.41 – Char Mass Fraction (69 micron) for O_2-Fired Case, OITM

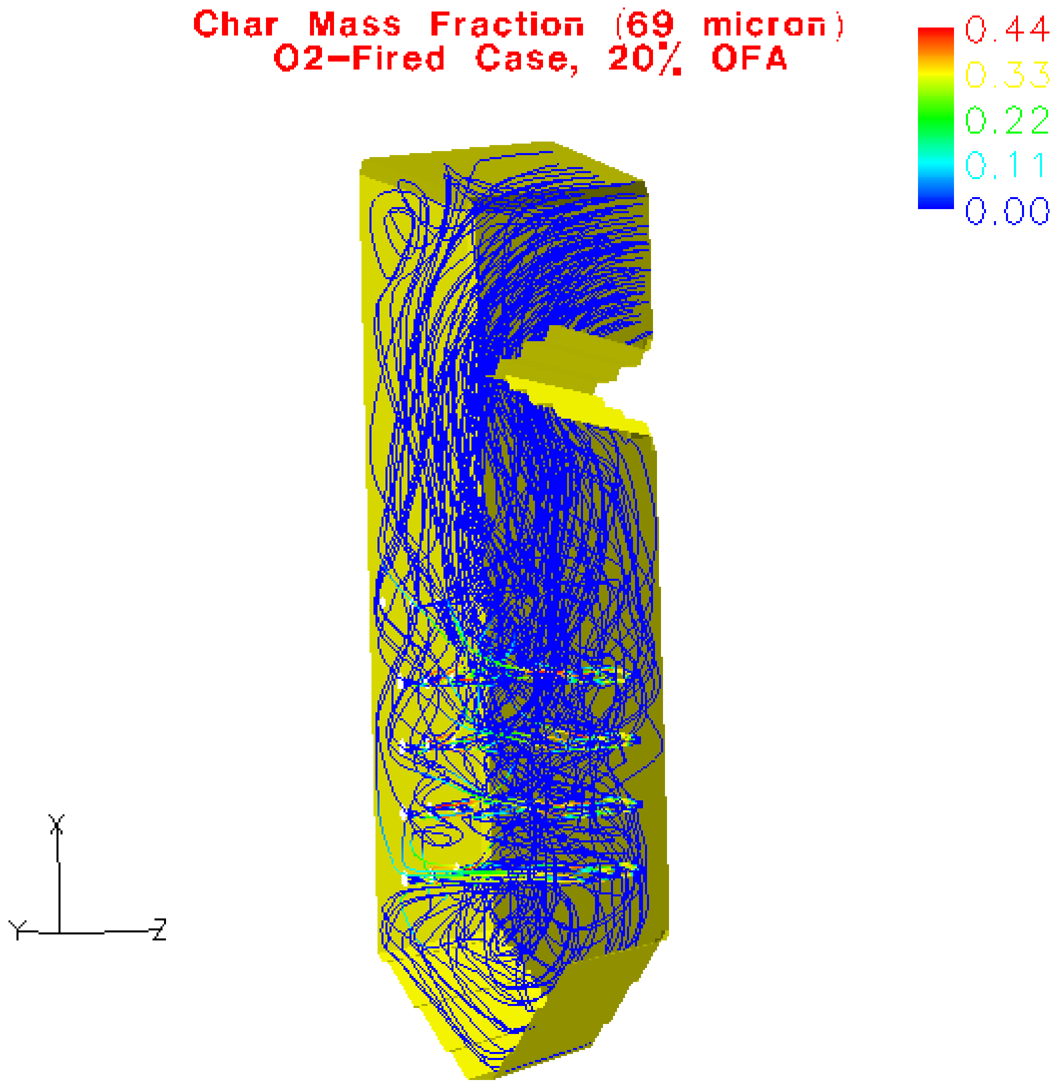

Figure 4.42 – Char Mass Fraction (169 micron) for O_2-Fired Case, OITM

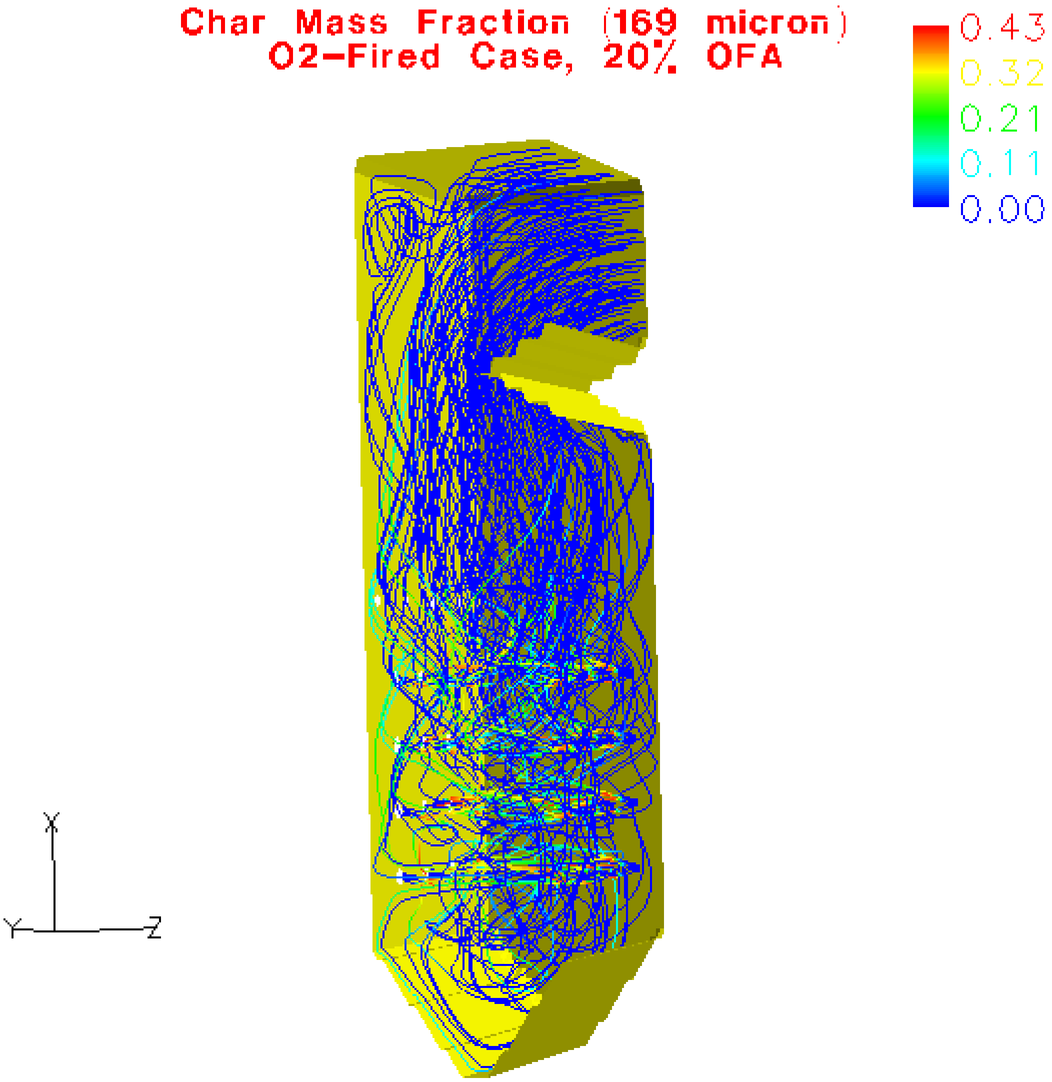

4.2 Furnace Waterwall and Division Wall Design

The O_2PC supercritical boiler incorporates the state-of-the-art once-through utility (OTU) Benson Vertical technology, which uses low fluid mass flow rates in combination with optimized rifled tubing and offers the following advantages:

> **“Natural Circulation” Flow Characteristic:** By designing for low mass flow rates that minimize frictional pressure losses, high heat flux tubes receive more flow to minimize temperature unbalances (see Figure 4.43).
>
> **Improved Heat Transfer Coefficient:** By using optimized rifled tubing, departure from nucleate boiling (DNB) when operating near the critical pressure can be suppressed, even with relatively low fluid mass flow rates, and dryout can be prevented from occurring until steam qualities of greater than 90% are achieved. This lowers the wall temperature permitting the use of thinner wall less expensive materials (see Figure 4.44).
>
> **Simple Configuration:** A standard, simple support system can be used to support the vertical tube panels so that interconnecting piping and headers between multiple passes are not required.
>
> **Low Pressure Losses:** The low mass flow rates significantly reduce pressure loss, which reduces auxiliary power and therefore increases cycle efficiency. The boiler design pressure can also be lowered.

The furnace heat transfer tube design utilizing optimized rifled tubes is summarized in Figure 4.45.

4.2.1 Tube Wall Temperature and Pressure Loss

Thermal/hydraulic modeling of the waterwalls and division walls was performed using the Siemens computer program, Stade2 [7]. Stade2 creates a one-dimensional model of the tube panels to determine inside heat transfer and wall temperatures, pressure loss, the linear stability analysis, and static stability analysis.

Stade2 models of the waterwalls and division walls were created and the average heat flux (Figure 4.34) and average mass flow were applied to establish the net pressure difference between the inlet and outlet headers. Models of the peak heat flux tubes were then created and Stade2 was used to determine the increased mass flow rate corresponding to the average pressure drop (due to the natural circulation characteristic of the optimized rifle tube geometry). For example, for the cryogenic O_2PC design, the average heat flux and average mass flux (832 kg/m^2-sec) produced a pressure loss of 33.7 psi. To match this pressure loss for the peak heat flux tube requires a mass flux of 966 kg/m^2-sec (0.71 MM lb/ft^2-hr). Due to the increased mass flow rate the maximum tube wall temperatures of the peak heat flux tube is reduced. Figure 4.46 presents the outside wall temperature of the peak heat flux waterwalls and division walls for the air-fired and O_2-fired designs.

Based on the maximum outside wall temperatures of Figure 4.46 the minimum tube wall thickness is computed using stress allowables from the ASME Boiler and Pressure Vessel Code as follows (design pressure = 5000 psi):

Air-Fired:	Material = SA-213-T2, min. wall thickness = 0.22”
O2-Fired Cryo.:	Material = SA-213-T92, min. wall thickness = 0.20”
O2-Fired OITM:	Material = SA-213-T92, min. wall thickness = 0.23”

4.2.2 Tube Panel Stability

The waterwall and division wall designs were determined by Stade2 to be statically and linearly dynamically stable at full and part loads (although the 25% load case appears to be near the unstable region). A more thorough treatment of dynamic stability was performed using the Siemens program, Dynastab [8]. Dynastab performs calculations for a single tube within a greater number of parallel tubes. The calculation starts from a steady state and examines the flow behavior of a single tube with slightly changed conditions (e.g. heat input, tube geometry) compared with mean tubes of the heating surface. The mass flow of the single tube is stimulated by a distinct disturbance (e. g. global or local heating factor, inlet enthalpy), while pressure drop is kept constant. If this disturbance causes continuous oscillations, the tube is dynamically unstable; whereas if the disturbance results in a (new) steady state condition, the tube is dynamically stable.

A 10% step increase in heat flux was applied to the single tube model. Figure 4.47 presents the transient results of inlet mass flow versus time (although a single tube was modeled the flow per entire furnace is presented). The 100% and 72% loads are stable, the 50% load is marginally stable, and the 25% load is unstable. To ensure stable operation at low loads, a pressure equalization header is added to the design at an elevation of 80’ and the resultant dynamic stability response is shown in Figure 4.48. With the pressure equalization header all loads are dynamically stable.

Figure 4.43 – Advantage of Low Mass Flux Design

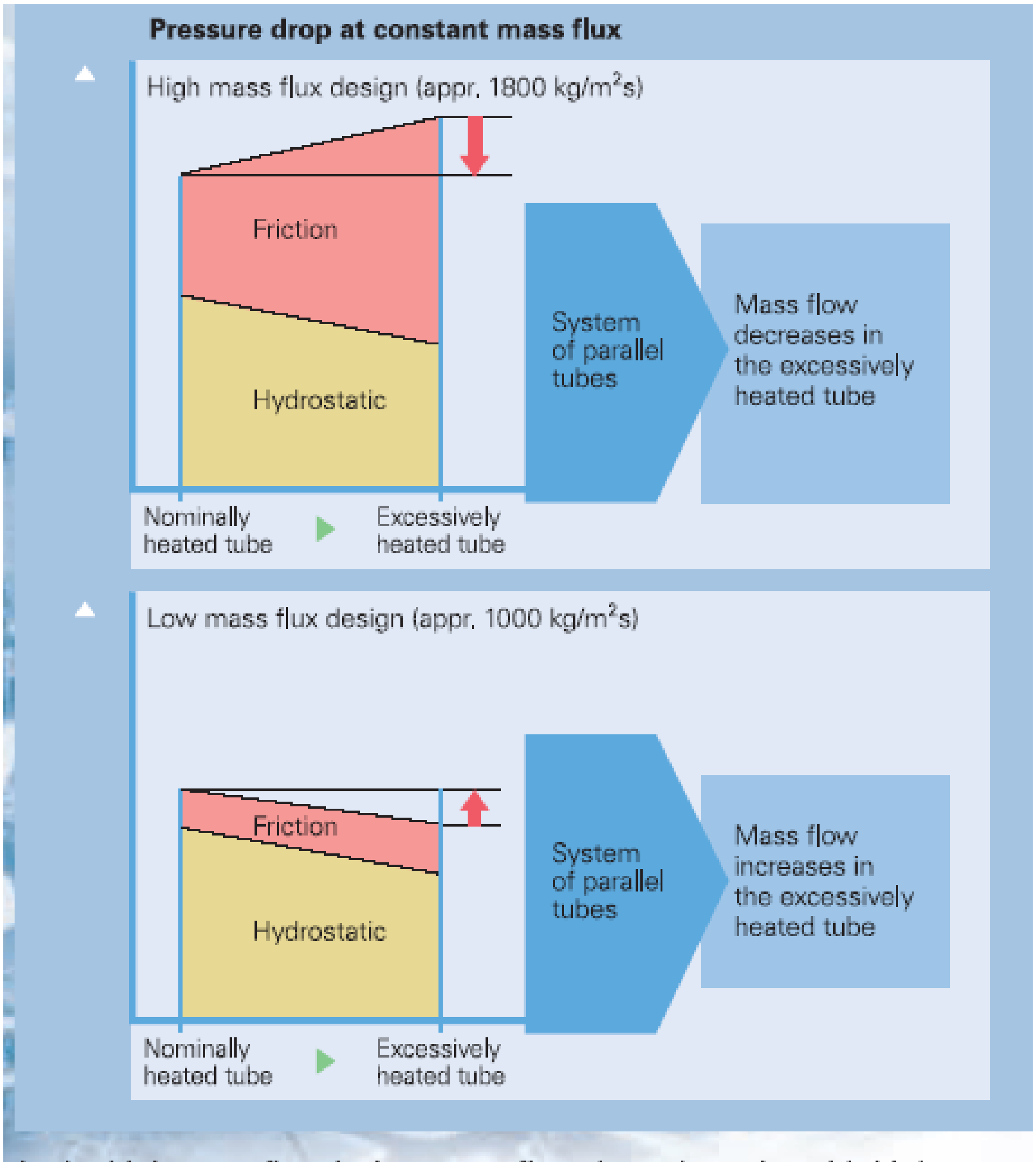

In the high mass flux design, mass flow through a tube with higher heat input decreases, while in the low mass flux design it increases,

Figure 4.44 – Tube Wall Temperature with Smooth, Standard Rifled, and Optimized Rifle Tubes

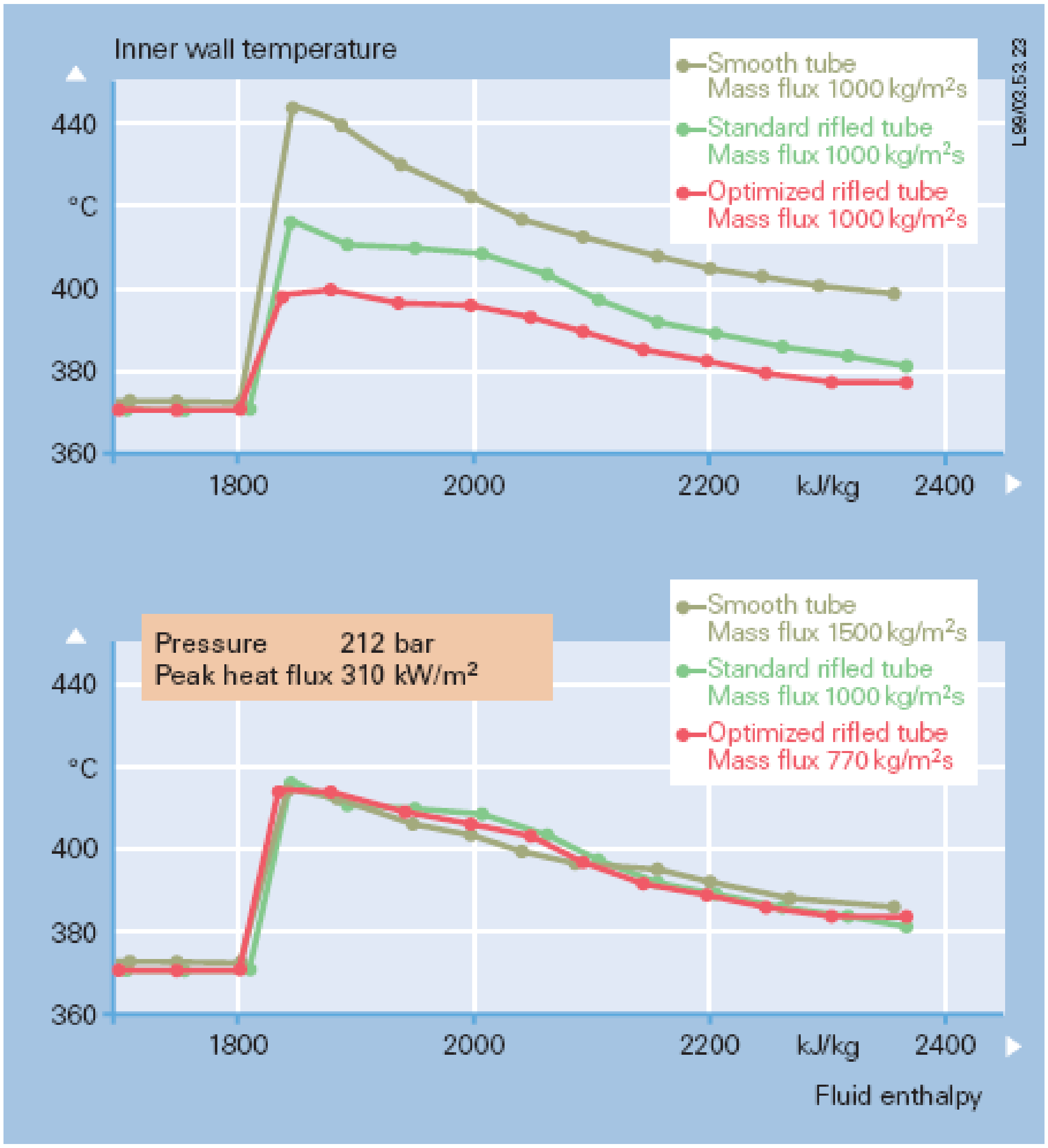

The outstanding heat transfer characteristics of the optimized rifled tube can be utilized to reduce either tube wall temperatures or mass fluxes in rifled tubes.

Figure 4.45 – Rifled Tube Design

		Air-Fired	O2 PC SC Cryogenic	O2 PC SC OITM
Material		SA-213-T2	SA-213-T92	SA-213-T92
OD	in	1.40	1.40	1.40
twall	in	0.22	0.20	0.23
ID	in	0.96	1.00	0.94
Pitch	in	2.00	2.00	2.00
Ligament	in	0.60	0.60	0.60
Ligament Width	in	0.25	0.25	0.25
Number of waterwall tubes		1218	888	888
Number of radiant superheater tubes		618	720	666
Number of ribs		6	6	6
Rib Height	in	0.048	0.050	0.048

Figure 4.46 – Outside Tube Wall Temperature with Peak Heat Flux

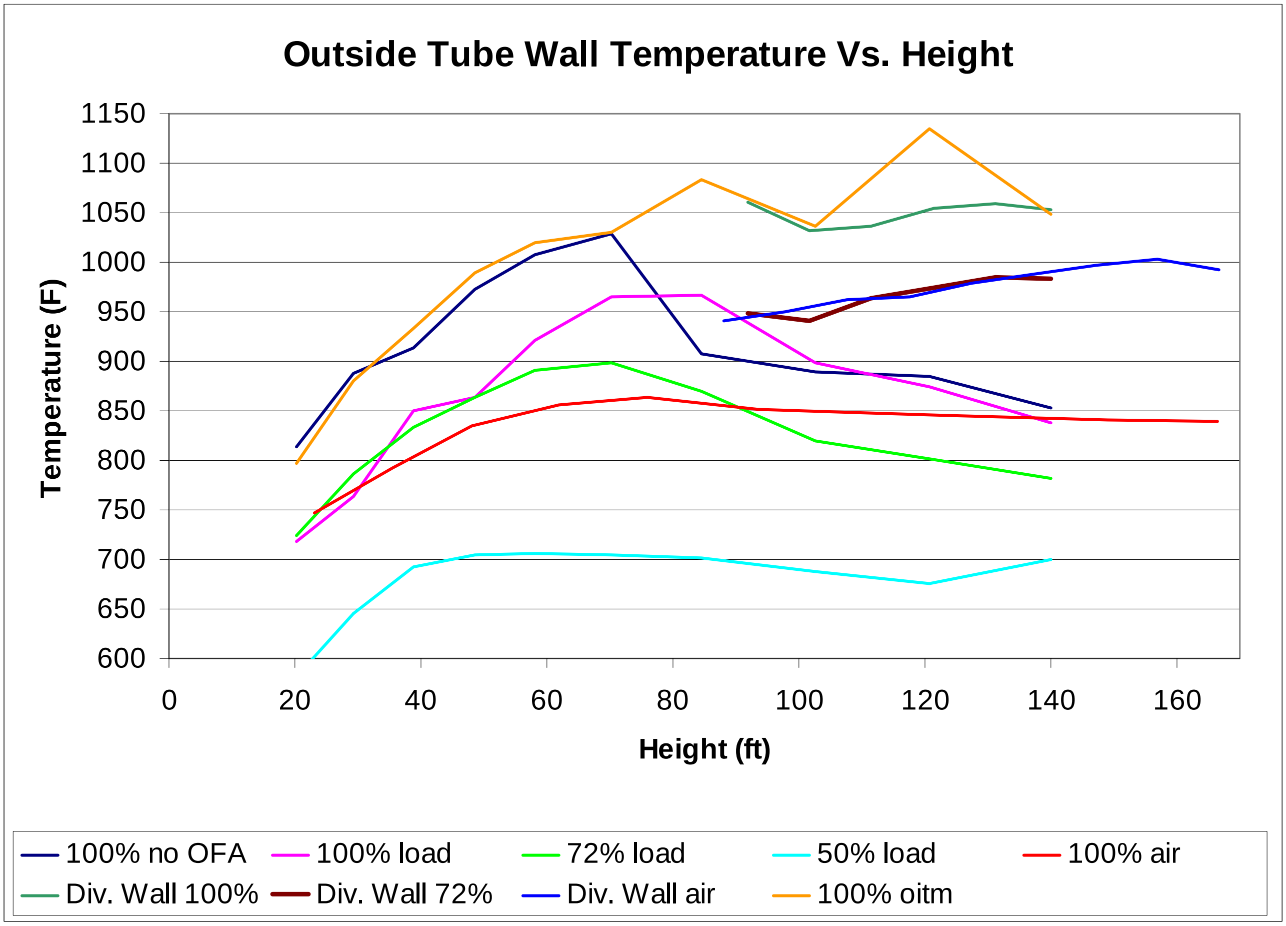

Figure 4.47 – Tube Inlet Mass Flow With a 10% Heat Flux Step Increase (No Pressure Equalization Header)

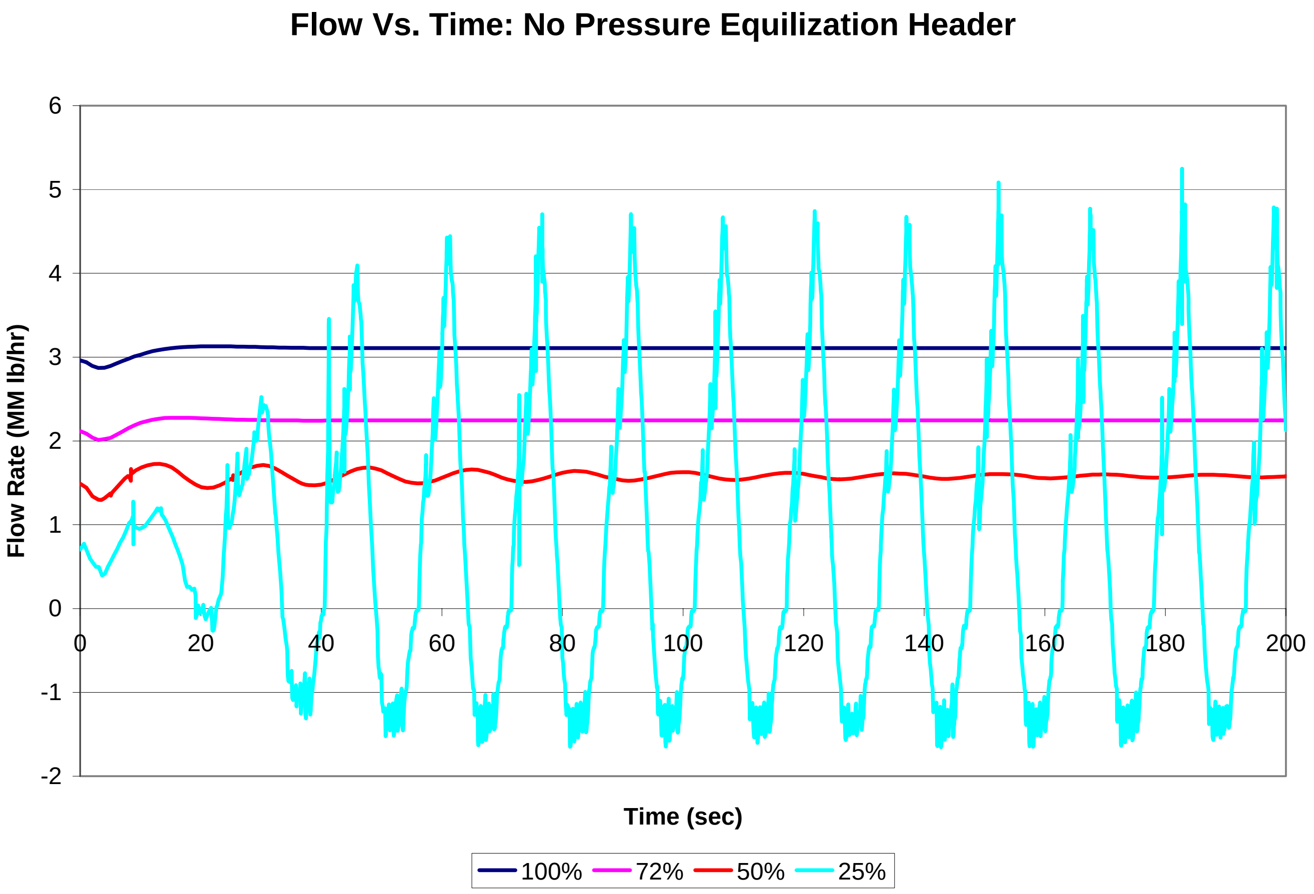

Figure 4.48 – Tube Inlet Mass Flow With a 10% Heat Flux Step Increase (With Pressure Equalization Header at 80')

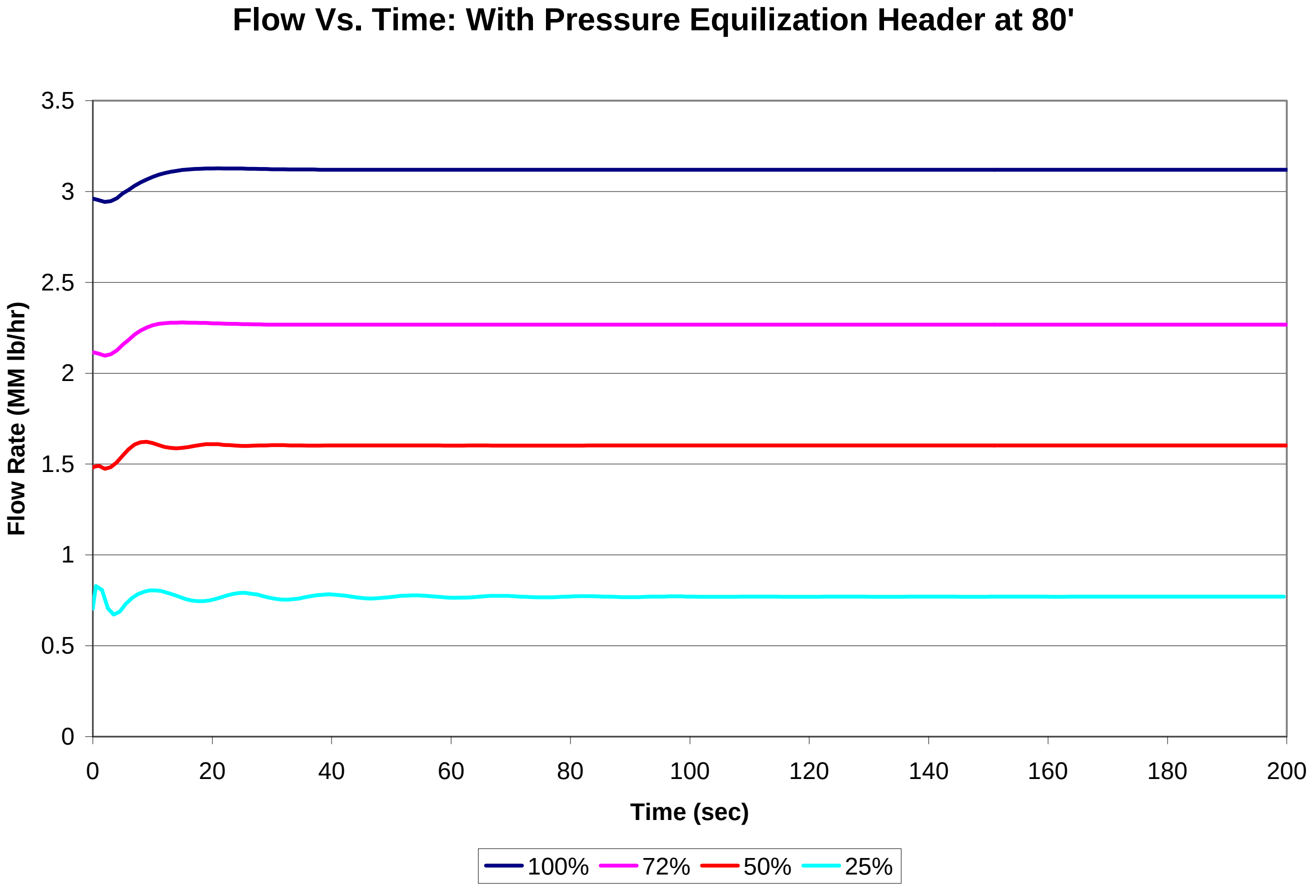

4.3 Heat Recovery Area Design and Analysis

4.3.1 HEATEX Program Description

HEATEX [4] is a Foster Wheeler general-purpose program for thermal/hydraulic analysis of tube banks. The program performs heat transfer calculations on a local basis by dividing the tube bundle into a number of small heat transfer elements.

4.3.2 Air-Fired Reference Case

HEATEX was used to determine the heat recovery area (HRA) design of the convective tube banks between the furnace exit and the SCR/air heater. These tube banks include the finishing superheater, finishing reheater, primary superheater, primary reheater, upper economizer, and lower economizer. Flue gas exits the furnace at 2185ºF and flows over the finishing superheater and finishing reheater tube bundles where it heats the main steam and reheat steam to 1083ºF and 1113ºF, respectively. The gas flow is then split into two parallel flows: one passing over the primary reheater and the other passing over the primary superheater and upper economizer. The gas split is controlled by dampers to achieve the proper reheater outlet temperature. Attemperating spray is used to control superheat temperature. The flue gas is combined downstream of the dampers and flows over the lower economizer, which receives water from the last feedwater heater stage. Flue gas exits the lower economizer at 720ºF and is sent to the SCR and then to the air heater. Figure 4.6 presents the heat transfer requirements of the HRA banks. Figure 4.49 presents the corresponding design of the HRA banks. Total surface area of all convective banks is 335,025 ft^2. The performance of HRA tube banks is shown in Figure 4.50. The total heat transferred to the water/steam is 1431 MM Btu/hr as 3.59 MM lb/hr of flue gas is cooled from 2185ºF to 720ºF.

4.3.3 Oxygen-Fired Case, Cryogenic ASU

Due to the 40% lower flue gas flow rate of the cryogenic ASU oxygen-fired case versus the air-fired case, the cross sectional area of the HRA is reduced to maintain the same gas side velocity (and pressure drop). HEATEX was used to determine the heat recovery area design of the convective tube banks between the furnace exit and the gas recuperator. These tube banks include the finishing superheater, finishing reheater, primary reheater, and lower economizer. Flue gas exits the furnace at 2450ºF and flows over the finishing superheater and finishing reheater tube bundles where it heats the main steam and reheat steam to 1083ºF and 1113ºF, respectively. Because of the reduced flue gas flow and lower HRA duty, the HRA is designed in series instead of parallel to produce a more compact design After exiting the finishing reheater the flue gas flows over the primary reheater and then the lower economizer, which receives water from the last feedwater heater stage. Flue gas exits the lower economizer at 695ºF and is sent to the gas recuperator.

Figure 4.7 presents the heat transfer requirements of the HRA banks. Figure 4.49 presents the corresponding design of the HRA banks. Total surface area of all convective banks is 218,693 ft^2. The performance of HRA tube banks is shown in Figure 4.50. The total heat transferred to the water/steam is 1151 MM Btu/hr as 2.12 MM lb/hr of flue gas is cooled from 2450ºF to 695ºF. The total heat transfer surface required in the oxygen-fired HRA is 35% less than the air-fired HRA due to the following main reasons:

1. More heat is absorbed in the oxygen-fired furnace (2089 MM Btu/hr) than the air-fired furnace (1751 MM Btu/hr) due to the higher adiabatic temperature and greater the specific heat of the oxygen-fired furnace flue gas. This requires less heat transfer duty in the HRA (as a consequence the upper economizer is not needed)

2. A higher heat transfer coefficient can be achieved in the oxygen-fired HRA than the air-fired HRA for the same flue gas pressure loss due to greater molecular weight (38 mol/lb-mol vs. 29 mol/lb-mol) of the oxygen-fired flue gas.

The HRA tube materials and wall thickness are nearly the same for the air-fired and oxygen-fired design (except for the finishing superheater where the 0.42” wall thickness of the air-fired case is increased to 0.46” for the oxygen-fired case) since the flue gas and water/steam temperature profiles encountered by the heat transfer banks are very similar.

4.3.4 Oxygen-Fired Case, OITM

Due to the 25% lower flue gas flow rate of the cryogenic ASU oxygen-fired case versus the air-fired case, the cross sectional area of the HRA is reduced to maintain the same gas side velocity (and pressure drop). HEATEX was used to determine the heat recovery area design of the convective tube banks between the furnace exit and the gas recuperator. These tube banks include the finishing superheater, finishing reheater, primary superheater, primary reheater, upper economizer, and lower economizer. Flue gas exits the furnace at 2185ºF and flows over the finishing superheater and finishing reheater tube bundles where it heats the main steam and reheat steam to 1083ºF and 1113ºF, respectively. The flue gas is then used to heat the air used for the OITM process. The gas flow is then split into two parallel flows: one passing over the primary reheater and the other passing over the primary superheater and upper economizer. The gas split is controlled by dampers to achieve the proper reheater outlet temperature.

Attemperating spray is used to control superheat temperature. The flue gas is combined downstream of the dampers and flows over the lower economizer, which receives water from the last feedwater heater stage. Flue gas exits the lower economizer at 695ºF and is sent to the gas recuperator.

Figure 4.8 presents the heat transfer requirements of the HRA banks. Figure 4.49 presents the corresponding design of the HRA banks. Total surface area of all convective banks is 291,150 ft^2 (242,510 ft^2 without the air heater). The total heat transfer surface required in the oxygen-fired HRA is 13% less than the air-fired HRA (28% less not including the air heater). The performance of HRA tube banks is shown in Figure 4.50. The total heat transferred to the water/steam is 1181 MM Btu/hr and to the air is 990 MMBtu/hr as 2.68 MM lb/hr of flue gas is cooled to 695ºF. The total furnace + HRA heat transfer surface area for the OITM O_2-PC is 309,799 ft^2 as compared to 382,574 ft^2 for the air-fired PC and 252,002 ft^2 for the cryogenic ASU O_2-PC.

The HRA tube materials and wall thickness are nearly the same for the air-fired and OITM oxygen-fired design (except for the finishing superheater where the 0.42” wall thickness of the air-fired case is increased to 0.46” for the oxygen-fired case) since the flue gas and water/steam temperature profiles encountered by the heat transfer banks are very similar.

The air heater is constructed Incoloy MA956 which is an iron-chromium-aluminum alloy. Incoloy MA956 has been used in advanced gas turbine engines and is resistant to creep, oxidation, and corrosion at temperatures up to 2200ºF. The furnace air heater is a three pass tubular design situated above the furnace nose to reduce radiation and maximum metal temperature. Air is heated from 745 to 1650ºF as the flue gas is cooled from 2950 to 2185ºF. Maximum metal temperature is approximately 1900ºF.

Figure 4.49 – HRA Tube Bank Design

		Air-Fired	**O2 PC SC Cryogenic**	**O2 PC SC OITM**
Air Heater				
Length	ft			28.0
No. of Tubes Deep				42
No. of Tubes Wide				79
Total Number of Tubes				3,318
Tube Outside Diameter	in			2.000
Tube Thickness	in			0.06
Tube Material				MA956
Design Pressure	psi			250
Design Temperature	F			2000
Stress Allowable	psi			8200
Min. Wall	in			0.040
Total Surface Area	ft2			48,640
Finishing Superheater				
Length	ft	36.0	24.0	24.0
No. of Tubes Deep		44	56	40
No. of Tubes Wide		30	32	32
Total Number of Tubes		1,320	1,792	1,280
Tube Outside Diameter	in	2.000	2.000	2.000
Tube Thickness	in	0.42	0.47	0.47
Tube Material		SA-213-T92	SA-213-T92	SA-213-T92
Design Pressure	psi	5000	5000	5000
Design Temperature	F	1150	1180	1180
Stress Allowable	psi	10200	8379	8379
Min. Wall	in	0.414	0.470	0.470
Total Surface Area	ft2	26,539	24,021	17,152
Vertical Reheater				
Length	ft	30.5	20.0	20.0
No. of Tubes Deep		40	72	60
No. of Tubes Wide		63	51	51
Total Number of Tubes		2,520	3,672	3,060
Tube Outside Diameter	in	2.250	2.250	2.250
Tube Thickness	in	0.165	0.165	0.165
Tube Material		SA-213-T92	SA-213-T92	SA-213-T92
Design Pressure	psi	1000	1000	1000
Design Temperature	F	1200	1200	1200
Stress Allowable	psi	7990	7330	6730
Min. Wall	in	0.173	0.173	0.173
Total Surface Area	ft2	45,270	43,260	36,050
Primary Superheater				
Length	ft	17.0		9.5
No. of Tubes Deep	0	96		64
No. of Tubes Wide	0	63		90
Total Number of Tubes	0	6,048		5,760
Tube Outside Diameter	in	2.250		2.250
Tube Thickness	in	0.42		0.42
Tube Material		SA-213-T2		SA-213-T2
Design Pressure	psi	5000		5000
Design Temperature	F	925		925
Stress Allowable	psi	11550		11550
Min. Wall	in	0.412		0.412
Total Surface Area	ft2	63,252		33,662

Figure 4.49 – HRA Tube Bank Design (Continued)

		Air-Fired	O2 PC SC Cryogenic	O2 PC SC OITM
Horizontal Reheater				
Length	ft	17.0	24.0	21.0
No. of Tubes Deep		70	75	75
No. of Tubes Wide		125	90	90
Total Number of Tubes		8,750	6,750	6,750
Tube Outside Diameter	in	2.250	2.250	2.250
Tube Thickness	in	0.165	0.165	0.165
Tube Material		SA-213-T2	SA-213-T2	SA-213-T2
Design Pressure	psi	1000	1000	1000
Design Temperature	F	950	950	950
Stress Allowable	psi	9200	9200	9200
Min. Wall	in	0.127	0.127	0.127
Total Surface Area	ft2	93,461	101,792	89,067
Upper Economizer				
Length	ft	17.0	0.0	9.5
No. of Tubes Deep		30	0	36
No. of Tubes Wide		126	0	90
Total Number of Tubes		3,780	0	3,240
Tube Outside Diameter	in	2.250	0.000	2.250
Tube Thickness	in	0.34	0	0.32
Tube Material		SA-210-A1	0	SA-210-A1
Design Pressure	psi	5000	0	5000
Design Temperature	F	700	0	650
Stress Allowable	psi	15600	0	17100
Min. Wall	in	0.322	0	0.298
Total Surface Area	ft2	40,373	0	19,339
Lower Economizer				
Length	ft	27.0	24.0	27.0
No. of Tubes Deep		33	39	33
No. of Tubes Wide		126	90	90
Total Number of Tubes		4,158	3,510	2,970
Tube Outside Diameter	in	2.250	2.250	2.250
Tube Thickness	in	0.32	0.32	0.32
Tube Material		SA-210-A1	SA-210-A1	SA-210-A1
Design Pressure	psi	5000	5000	5000
Design Temperature	F	650	650	650
Stress Allowable	psi	17100	17100	17100
Min. Wall	in	0.298	0.298	0.298
Total Surface Area	ft2	66,130	49,620	47,240
Total HRA Surface Area	ft2	335,025	218,693	291,150
Total Furnace + HRA Surface Area	ft2	382,574	252,002	309,799

Figure 4.50 – HRA Tube Bank Performance

	Bank	Surface Area (ft2)	Heat Trans. Coeff. (Btu/hr-ft2-F)	Mean Temp. Diff. (F)	Heat Transfer (MM Btu/hr)	Gas Press. Drop (in H2O)
O2 PC OITM	Air Heater	48,640	17.1	1189	990	0.38
Air PC	Finishing Superheater	26,539	11.4	1038	315	0.12
O2 PC	Finishing Superheater	24,021	14.7	1173	414	0.19
O2 PC OITM	Finishing Superheater	17,157	16.0	1026	281	0.20
Air PC	Primary Superheater	63,252	8.6	356	194	0.29
O2 PC	Primary Superheater	0				0.00
O2 PC OITM	Primary Superheater	33,662	11.2	268	101	0.44
Air PC	Finishing Reheater	45,270	10.2	722	333	0.18
O2 PC	Finishing Reheater	43,260	12.2	629	331	0.35
O2 PC OITM	Finishing Reheater	36,050	14.1	658	334	0.47
Air PC	Primary Reheater	93,461	9.1	402	341	0.47
O2 PC	Primary Reheater	101,792	10.8	290	320	0.58
O2 PC OITM	Primary Reheater	89,067	10.9	353	342	0.55
Air PC	Upper Economizer	40,373	7.5	367	111	0.20
O2 PC	Upper Economizer	0				0.00
O2 PC OITM	Upper Economizer	19,339	15.6	367	111	0.19
Air PC	Lower Economizer	66,130	9.9	196	128	0.35
O2 PC	Lower Economizer	49,620	9.8	177	86	0.27
O2 PC OITM	Lower Economizer	47,240	10.4	165	81	0.28
Air PC	Total	335,025			1431	1.61
O2 PC	Total	218,693			1151	1.39
O2 PC OITM	Total	291,155			2171	2.51

5.0 Conclusion

A new boiler is presented where the combustion air is separated into O_2 and N_2 and the boiler uses the O_2, mixed with recycled flue gas, to combust the coal. The products of combustion are thus only CO_2 and water vapor. The water vapor is easily condensed, yielding a pure CO_2 stream ready for sequestration. The CO_2 effluent is in a liquid form and is piped from the plant to the sequestration site. The combustion facility is thus truly a zero emission stackless plant.

A design and analysis of a reference air-fired boiler, an oxygen-fired boiler with cryogenic ASU, and an oxygen-fired boiler with oxygen ion transport membrane were performed. The O_2PC supercritical boiler incorporates the OTU Benson Vertical technology, which uses low fluid mass flow rates in combination with optimized rifled tubing. The following conclusions are made comparing the air-fired furnace with the oxygen-fired furnace design and performance:

1. The oxygen furnace has only approximately 65% of the surface area and approximately 45% of the volume of the air-fired furnace due to the higher heat flux of the oxygen-fired furnace.

2. Due to the higher O_2 concentration of the oxygen-fired furnace versus the air-fired furnace (40% vs. 21%), the maximum flame temperature of the oxygen-fired furnace is approximately 500°F higher.

3. Maximum wall heat flux in the oxygen-fired furnace is about 2.5 times that of the air-fired furnace (175,000 Btu/hr-ft^2 vs. 70,000 Btu/hr-ft^2) due to the higher flame temperature and higher H_2O and CO_2 concentrations.

4. 100% coal burnout is achieved in the oxygen-fired furnace (compared to 99.6% burnout in the air-fired furnace) due to higher furnace temperature and higher concentration of oxygen. The burnout differential between the oxygen-fired boiler and the air-fired boiler is expected to be significantly greater when harder to burn fuels are fired.

5. The higher heat flux of the oxygen-fired furnace significantly increases the maximum waterwall temperature (from 870°F for the air-fired furnace to 1060°F for the oxygen-fired furnace) requiring the material to be upgraded from T2 to T92.

6. NOx is reduced by oxygen firing (compared to air-firing) by about a factor of two from 0.38 lb/MMBtu to 0.18 lb/MMBtu.

7. A pressure equalization header is included at an elevation of 80’ to ensure stable operation at low loads.

8. The total heat transfer surface required in the HRA is 35% less than the air-fired HRA due to more heat being absorbed in the oxygen-fired furnace and the greater molecular weight of the oxygen-fired flue gas. To minimize the required surface area, the HRA design is in series for the cryogenic ASU O_2-PC and parallel for the OITM O_2-PC.

9. The required HRA tube materials and wall thicknesses are nearly the same for the air-fired and oxygen-fired design since the flue gas and water/steam temperature profiles encountered by the heat transfer banks are similar.

10. A tubular convective air heater is included in the OITM O_2-PC to provide the necessary air heating for the membrane separation process. The furnace air heater is an Incoloy MA956 three pass tubular design situated above the furnace nose.

6.0 References

1. FW-FIRE, Fossil-fuel Water-walled Furnace Integrated Reaction Emission, Theory and User's Manual, Foster Wheeler Development Corp., 11/30/99.

2. Fan, Zhen and Seltzer, Andrew, "System Design and Analysis for Conceptual Design of Supercritical Oxygen-Based PC Boiler", Task 1 Topical Report, March 2006, DE-FC26-04NT42207.

3. Fan, Zhen and Seltzer, Andrew, "Advanced O2 Separation System Integration for Conceptual Design of Supercritical Oxygen-Based PC Boiler", Task 2 Topical Report, April 2006, DE-FC26-04NT42207.

4. HEATEX Computer Program, "A Program to Determine the Thermal/Hydraulic Performance of Gas-Cooled Heat Exchangers", Revision 24, Foster Wheeler Corporation.

5. EMISS Computer Program, "A Program to Determine Gaseous Emissivity", Foster Wheeler Corporation.

6. Fan, Zhen and Seltzer, Andrew, "Conceptual Design of Oxygen-Based PC Boiler", Final Report, September 2005, DE-FC26-03NT41736.

7. STADE2 Computer Program, "Calculation Program for Pressure Drop and Heat Transfer in Tubes", Siemens, Version 4.40.

8. DYNASTAB Computer Program, "Dynamic Stability of the Flow through Evaporator Heating Tubes in Fossil Fired Steam Generators", Siemens, Version 1.1.

7.0 List of Acronyms and Abbreviations

ASU	Air separation unit
DNB	Departure from nucleate boiling
CFD	Computational fluid dynamics
FEGT	Furnace exit gas temperature
FW-FIRE	Fossil fuel, Water-walled Furnace Integrated Reaction and Emission Simulation
HRA	Heat recovery area
LOI	Loss on ignition
NOx	Nitrogen oxides
OITM	Oxygen ion transport membrane
OD	Outside diameter
OFA	Over-fired air
OTU	Once-through utility
PC	Pulverized coal
SCR	Selective catalytic reactor