y
970
28

Dr 125

RFP-910

MASTER

INGOT-SHEET BERYLLIUM FABRICATION

1. This report is subject to Department of Commerce Comprehensive Export Schedule Part 385.2(c) (3) (v).
2. This report may not be published in whole or in part without approval of the Atomic Energy Commission.

THE DOW CHEMICAL COMPANY
ROCKY FLATS DIVISION
P. O. BOX 888
GOLDEN, COLORADO 80401
U.S. ATOMIC ENERGY COMMISSION
CONTRACT AT(29-1)-1106

DISTRIBUTION OF THIS DOCUMENT IS UNLIMITED

~~DISTRIBUTION OF THIS DOCUMENT IS LIMITED~~
~~Subject to Export Control, Domestic~~
~~Distribution Only, Minus Sales Outlets~~

DISTRIBUTION OF THIS DOCUMENT IS LIMITED
To Government Agencies and Their Contractors

DISCLAIMER

LEGAL NOTICE

February 9, 1968

RFP-910
UC-25 METALS, CERAMICS,
AND MATERIALS
TID-4500

INGOT-SHEET BERYLLIUM FABRICATION

Julius L. Frankeny
Dennis R. Floyd

THE DOW CHEMICAL COMPANY
ROCKY FLATS DIVISION
P. O. BOX 888
GOLDEN, COLORADO 80401
U. S. ATOMIC ENERGY COMMISSION
CONTRACT AT(29-1)-1106

DISTRIBUTION OF THIS DOCUMENT IS UNLIMITED

~~DISTRIBUTION OF THIS DOCUMENT IS LIMITED~~
~~Subject to Export Control. Domestic~~
~~Distribution Only, Minus Sales Outlets~~

~~DISTRIBUTION OF THIS DOCUMENT IS LIMITED~~
~~To Government Agencies and Their Contractors~~

CONTENTS

ACKNOWLEDGMENTS

Appreciation is expressed to the following for their contributions: From Research and Development in General Fabrication--W. W. Leslie for valuable assistance in and coordination of all rolling and forming work; K. E. Voiles for pioneering and executing most of the casting innovations; D. A. Lopeman, R. M. Simmons, J. J. Blakeslee, and W. M. Leverett for performing ably all experimental operations; and J. E. Honea for developing methods for and investigating properties of bare-rolled sheet. From Research and Development in Materials--T. A. Blatter and J. F. Capes for the metallographic support; and D. V. Miley for the mechanical properties data; From Research and Development Technology, Joining--G. K. Hicken for welding data; From Manufacturing Technical--D. W. Heller for many of the helpful forming suggestions; From Manufacturing, Fabrication--J. J. Steger, J. D. Spruiell, P. McHugh, and L. E. Smith for assistance in scheduling and suggestions on fabrication; From Tool Engineering--F. D. Lundberg, N. F. Hoffman, and F. A. Roth for the excellent tool-engineering support; From Maintenance--R. F. Biella, G. Olsen, W. Spencer, J. Stout, and B. Dusterbeck for developing machining techniques for beryllium; and from Quality Control--R. H. Ross for statistical data on chemistry and density.

Ingot-Sheet Beryllium Fabrication

Julius L. Frankeny and Dennis R. Floyd

Abstract. Summarized is work done at the Rocky Flats Plant on development of casting and rolling parameters for conversion of scrap, powder-pressed beryllium into ingot sheet. Forming processes of deep-drawing and roll-forming as applied to the ingot sheet are fully discussed.

The objectives were to develop economical techniques for fabricating the beryllium-scrap feed into usable shapes and find methods for improving mechanical and physical properties of materials over available commercial powder-metallurgy products. Data are given on results obtained and included also is information on welded joint strengths.

INTRODUCTION

Since 1961, the Rocky Flats Plant has been involved with the conversion of commercial grade, S-200 scrap beryllium, originally made by powder-metallurgy techniques into ingot sheet and usable shapes. A large quantity of available scrap, coupled with the high cost of recycling it through the powder process to a finished product, provided the economic impetus for the work. Efforts by others offered encouragement to the current approach (1) and (2).* The previous efforts were performed with higher purity feed (Pechiney CR), than what was used for the work reported herein.

Earlier work on rolling and forming of the powder-metallurgy product has been reported (1), (2), and (3). The sheet finally obtained was highly textured, and an economical process for fabricating shapes using conventional metalworking techniques did not materialize. Thus, shapes continued to be produced by machining from a solid, powder-metallurgy block. The procedure, plus the toxicity and reactivity of the starting powder, relates to the high cost of the finished product. Cost is one of the important factors inhibiting a more widespread use of beryllium as an engineering metal.

In detailing the work done, it is intended to make known to beryllium suppliers and users, the technology developed at the Rocky Flats Plant for making ingot-sheet beryllium. Perhaps the economies of the work processes can be applied to reduce the overall cost of fabricated beryllium items, and thereby expand their use.

The objectives in carrying out the project were two-fold:

1. To develop economical techniques for casting, rolling, and fabricating the beryllium-scrap feed into usable shapes; and
2. To develop mechanical and physical properties comparable to or better than currently available commercial powder-metallurgy products.

The operations are given in sequence as usually carried out, such as casting, rolling, and forming. In addition, a section is included on mechanical and physical properties of the product used. Supplementary details relating to the work efforts are contained in Appendix A, Materials Data.

DISCUSSION

1. Casting.

EXPERIMENTAL – Vacuum-induction casting has been used exclusively. A typical casting setup is shown in Figure 1. The mold-crucible arrangement was placed in a 65-inch, inside diameter (ID) Stokes vacuum-induction furnace. The induction coil was 42 inches long with a 29-inch ID, and was powered by a 250-kilowatt (kw), 960-cycle motor-generator set. As noted, insulating firebrick (1-inch thick) was used as the refractory lining for the coil. The furnace consisted of a bottom-pouring capability actuated by lifting the stopper rod via a vacuum-sealed linkage. Mold temperatures were measured with Inconel-sheathed, chromel-alumel thermocouples at the locations shown in Figure 1. Melt temperatures were monitored using a radiation pyrometer through a sight port in the furnace top.

---

*See references.

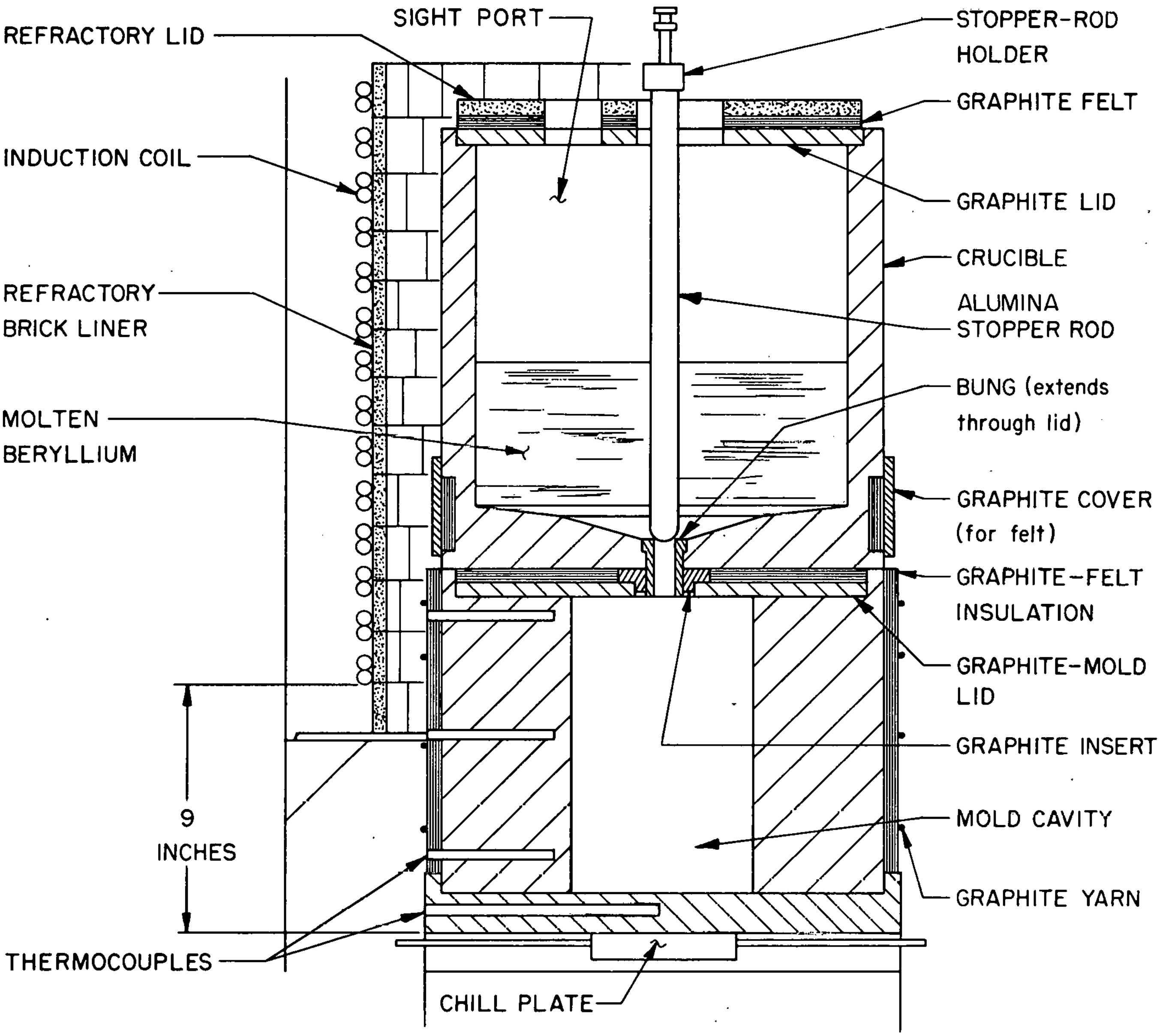

FIGURE 1. Cross-sectional view of the mold-crucible arrangement used to cast large, rectangular beryllium ingots.

Graphite molds and crucibles were used. Because liquid beryllium reacts with carbon, all graphite surfaces that contacted the beryllium received a protective coating. New crucibles and molds were given a hand-rubbed coating of a beryllium-beryllium sulfate (Be-$BeSO_4$) wash and baked at 1450°C for 30 minutes. The crucible gets a spray coating of the wash on the internal surfaces, pour hole, mold-crucible interface, and stopper rod. Molds are not spray-coated because a protective film of beryllium carbide (Be_2C) is formed during the initial baking which prevents further reaction. After use, both the mold and crucible should be cleaned thoroughly, and the crucible recoated as described earlier.

Mold temperatures are established by the location of the mold-crucible assembly within the induction coil. Graphite-felt insulation can be used to alter mold-temperature gradients. It was applied to the molds illustrated in Figure 1. A water-cooled chill plate (Figure 1) was used to control solidification of the large ingots.

The feed stock used for casting consists of powder-metallurgy scrap material mixed with recycle metal from previous castings. The charge used is always at least 15-weight percent (wt %) in excess of that required to fill the mold (4). Since the mold and crucible are in contact (see Figure 1), the excess metal remains in the crucible after the pour.

In addition to static casting, some work has been completed with centrifugal casting. A smaller vacuum-induction furnace is utilized than what was described earlier. The furnace has a 13-inch ID coil. The crucible is suspended over the mold which rotates about a vertical axis (see Figure 2). A speed range from 0 to 1000 revolutions per minute (rpm) is available. Mold temperatures are determined by the position of the graphite mold in the coil.

RESULTS – Beryllium decreases in volume by 7 percent during solidification (4). The result can produce a primary solidification of the pipe near the top of the ingot, with secondary piping and cracking occurring throughout the ingot as depicted in Figure 3. Since such defects do not heal completely during rolling, they must be eliminated from the castings.

FIGURE 2. Cross-sectional view showing the centrifugal casting assembly. The mold rotates about a vertical axis.

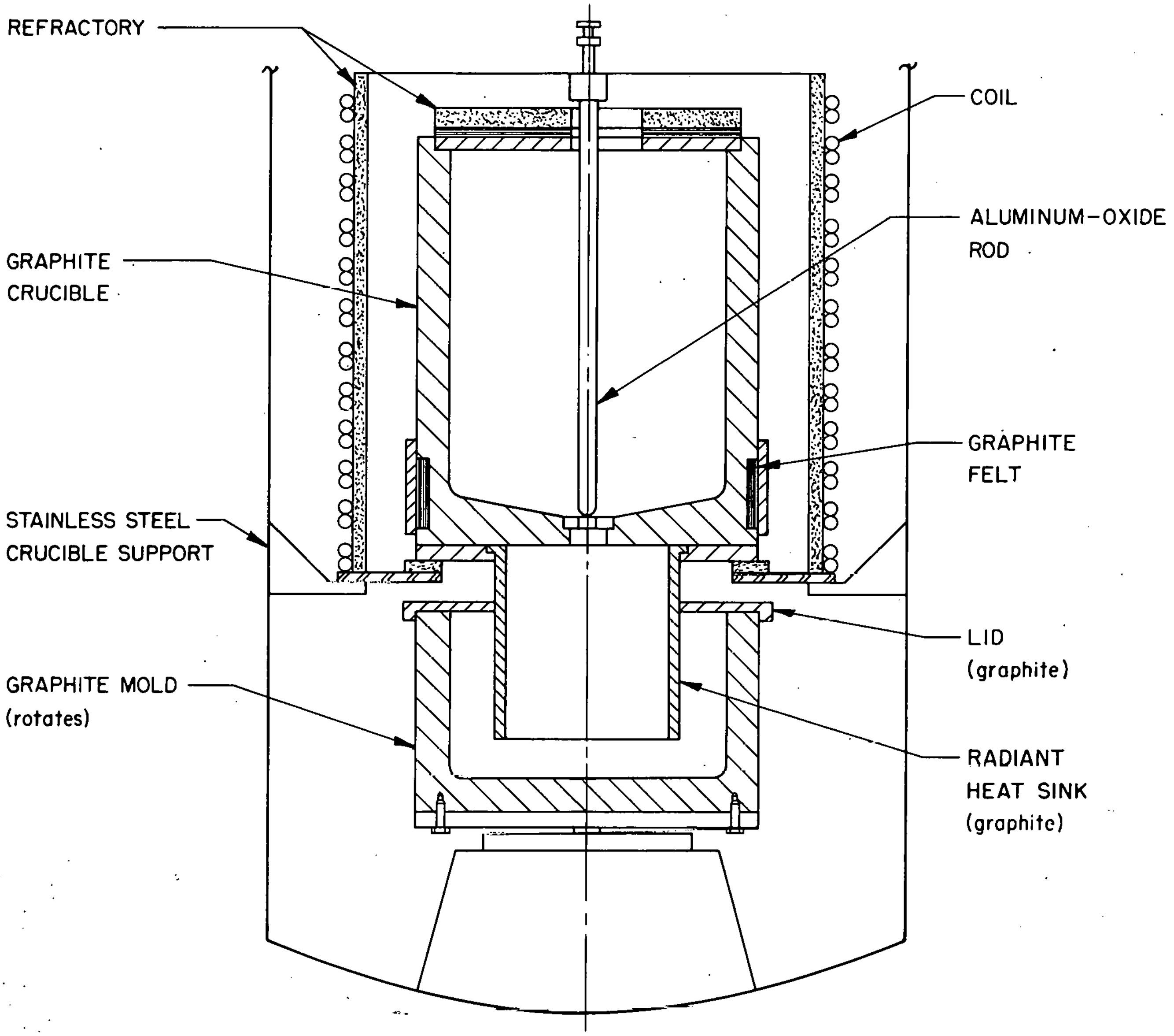

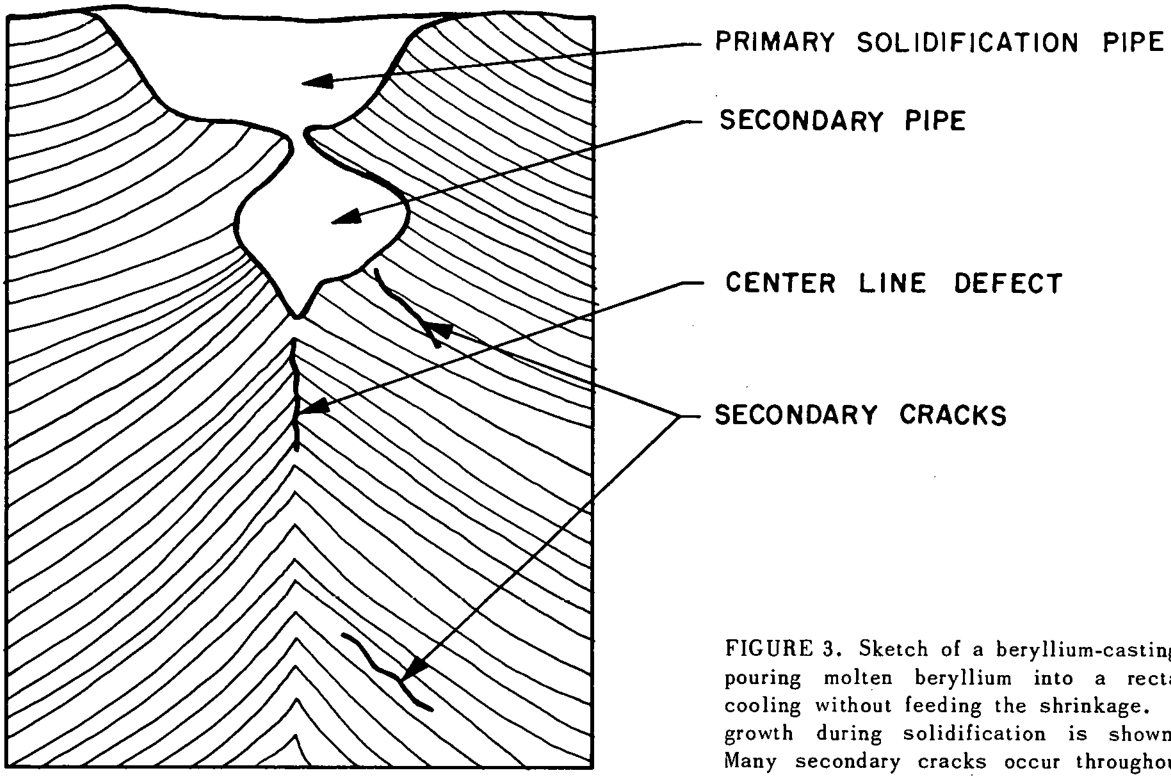

FIGURE 3. Sketch of a beryllium-casting section made by pouring molten beryllium into a rectangular mold and cooling without feeding the shrinkage. Direction of grain growth during solidification is shown by light lines. Many secondary cracks occur throughout such an ingot.

FIGURE 4. Sketch of ingot sections comparing desired structure (a) to the undesired structure (b). (The desired structure results when the side-wall insulation and the bottom-cooling are employed.)

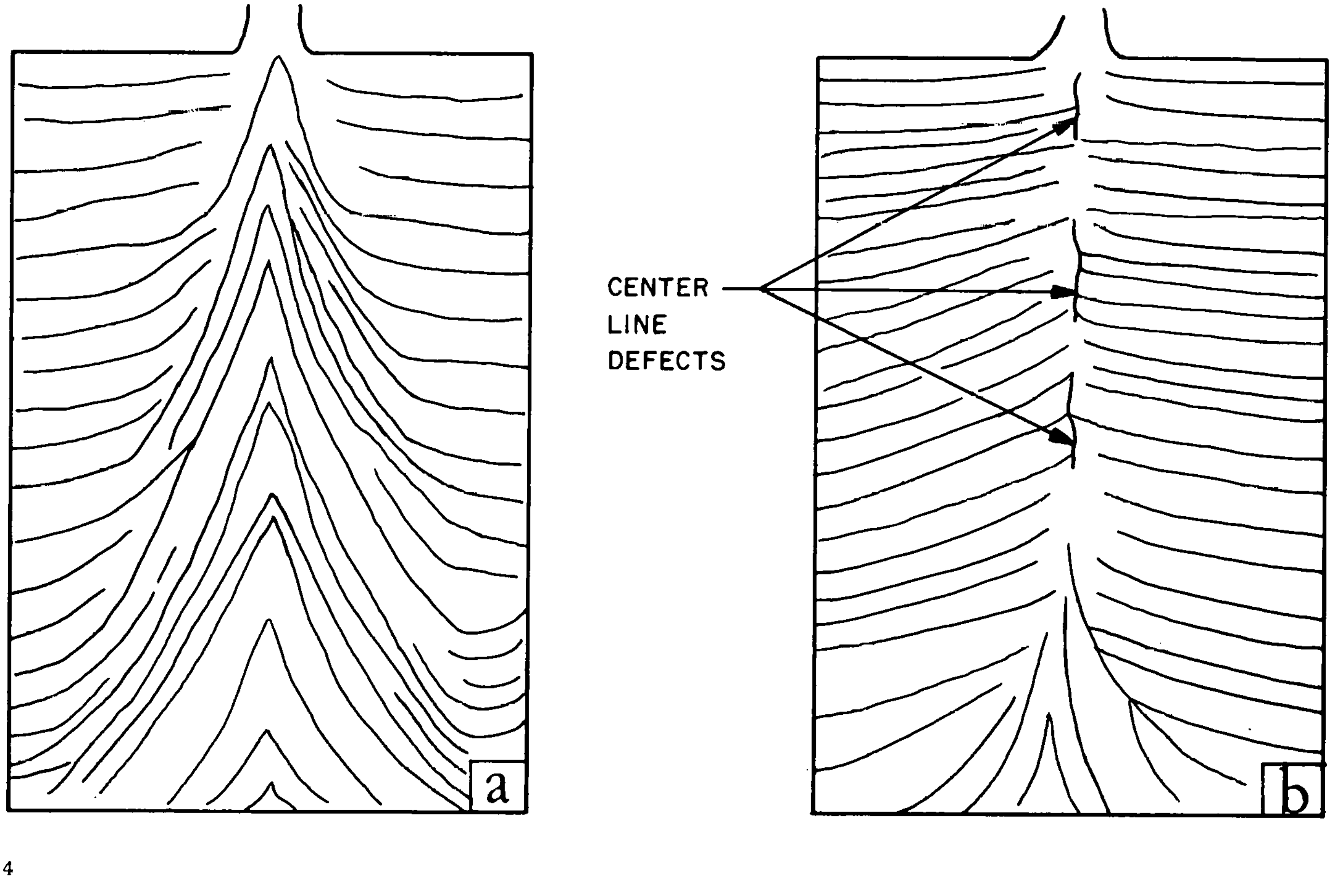

The technique used at Rocky Flats to eliminate ingot defects utilizes bottom pouring with 15-percent overcharge and a tapered crucible bottom. By allowing a 15-percent overcharge and providing a direct linkage between the mold and crucible, the overcharged metal can continuously feed the solidifying ingot. The tapered bottom on the crucible provides a hydrostatic head of molten beryllium which assures proper feeding.

FIGURE 5. Thermal cycle used in the vacuum-induction casting of beryllium at Rocky Flats. Temperatures of charge are used to control power input. Temperatures of the mold depend upon the position of mold in the induction coil.

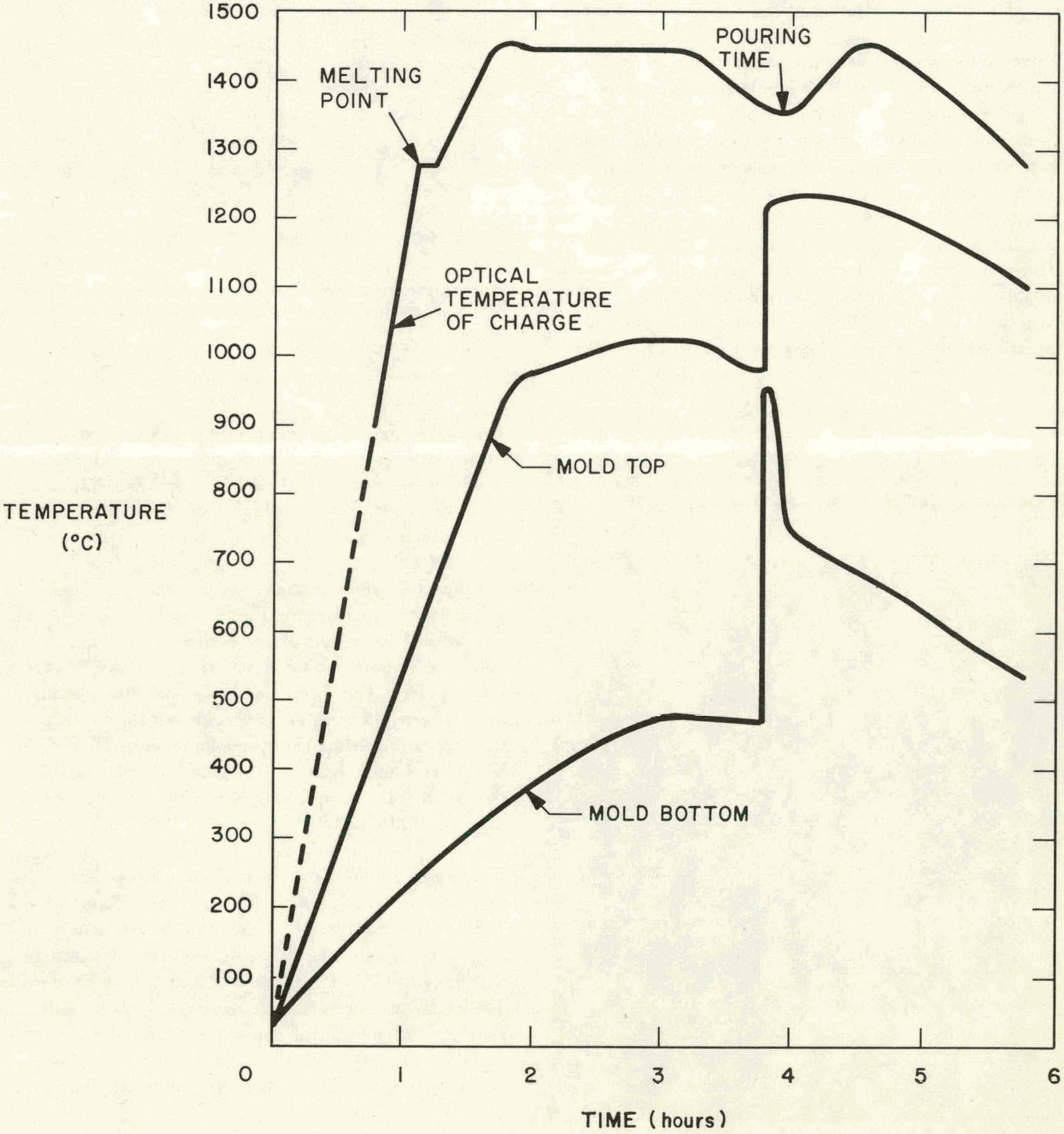

Center line defects are also eliminated by causing the columnar grains to turn upward during solidification. This can be done by providing insulation to prevent heat removal from the side walls, and removing heat from the bottom with a water-cooled chill block. Desirable and undesirable structures are sketched in Figures 4 (a) and (b). The type of defect shown in Figure 4 (b) is probably due to solidification stresses. For structures similar to Figure 4 (b), the center line or center plane constitutes a line or plane of weakness.

Figure 5 shows the thermal cycle of the melt in a typical run. The 1450°C superheat is required to assure melting of the entire charge. The temperature is dropped to 1350°C prior to pour to eliminate superheat at the time of pour. The molten metal remaining in the crucible after the pour is heated to 1450°C to allow continuous feeding of the ingot during solidification. The cooling cycle from 1450°C was determined by experience as the fastest decline which would not cause cracks in the ingot. When the melt temperature reaches 1000°C, the vacuum furnace is backfilled with helium to promote more rapid cooling.

FIGURE 6. Two large rectangular as-cast ingots—the casting on the left measures 11 by 11 by 15.5 inches; the one on the right measures 9 by 9 by 15.5 inches.

Pol 67-135

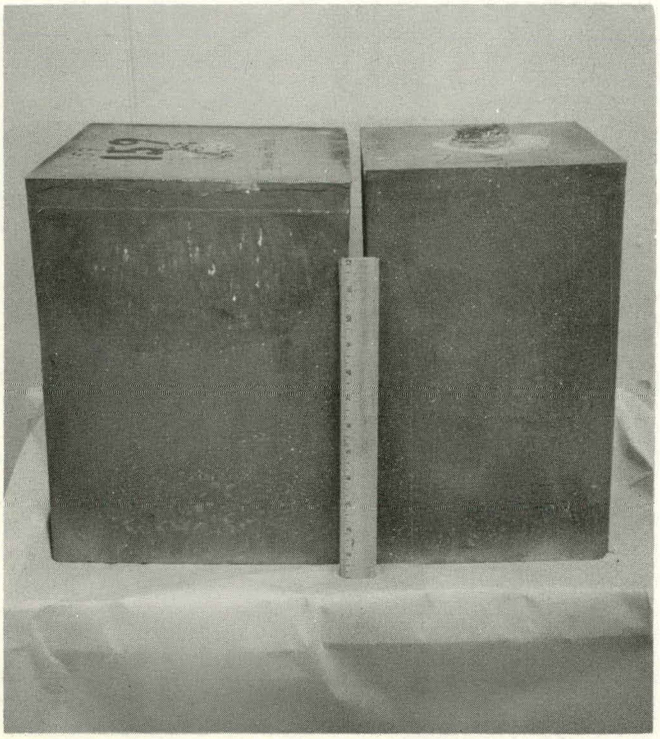

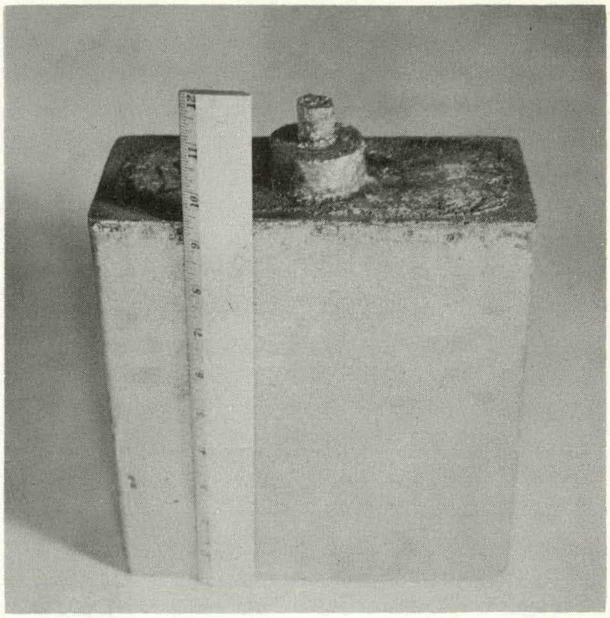

Pol 65-279

FIGURE 7. Shown is small as-cast rectangular beryllium casting. Ingot measures 4 by 9 by 9 inches.

Typically large rectangular beryllium castings are shown in Figure 6. The largest casting produced to date measures 11 by 11 by 15.5 inches. Aside from occasional minor surface tears near the top, these castings are usually defect-free.

Small rectangular castings, such as those in Figure 7, more closely approximate the rolling-billet dimensions. These have been cast either individually in a small induction furnace, or three at a time in a large induction furnace. The latter technique involves placing three separate crucibles and molds within the induction coil and heating them simultaneously. The same bottom-pour technique is used, except that a special stopper-rod mechanism serves to lift three stopper rods simultaneously.

In addition to the rectangular casting described, many cylindrical castings are made (see Figure 8). These vary from 2 to 10 inches in diameter and from 2 to 15 inches in length. Sound cylindrical castings with length-to-diameter ratios of 5 to 1 have been made. The grain structures of rectangular and cylindrical castings are shown in Figures 9 (a) through (e). Both types can be cast without defects using the techniques described. The rectangular castings are preferred for subsequent rolling operations.

Occasionally high density stringers appear in the top third of the 15-inch long rectangular ingots. These result from excessive time at 1450°C after the pour. Apparently, compounds of iron, aluminum, and silicon precipitate in the grain boundaries. Statistical analyses of chemical data show no significant chemical gradient from center line to outside, nor from top to bottom. Rapid solidification must prevent such grain-boundary precipitation in the lower portion of ingots. Remelting billets, rich in these stringers, does not cause an enrichment of stringers in the resulting ingot.

One of the more significant aspects of the casting operation is the utilization of scrap feed. Table I compares the chemistry of the feed material to the chemistry of the sheet after rolling. The purity of ingot sheet exceeds that of powder scrap primarily due to the decrease in BeO content, resulting from the casting operation. There is no significant change in the other impurity levels.

FIGURE 8. As-cast beryllium ingot, 7-inch diameter, 12.5 inches high. Large surface grains are the result of variations in mold coating, which acts as a thermal barrier. Pol 63-4B

TABLE I. Comparison of the chemistry of the scrap feed to the chemistry of the ingot sheet. Values are in percent by weight.

Materials	Feed Scrap	Wrought Sheet
Beryllium[a]	98.6	99.29
Beryllium Oxide[a,b]	1.65	0.260
Aluminum	0.090	0.075
Iron[a]	0.150	0.170
Magnesium	0.040	< 0.002
Silicon	0.050	0.050
Carbon[a]	0.080	0.070
Nitrogen[a]	0.037	0.015
Manganese	0.010	0.010
Chromium	0.010	0.010
Copper	0.010	0.010
Nickel	0.020	0.025
Titanium	0.040	0.013
Calcium	0.010	< 0.004
Cadmium	< 0.003	< 0.003
Cobalt	< 0.003	< 0.003
Molybdenum	< 0.003	< 0.003
Lead	< 0.003	< 0.004
Tungsten	< 0.006	< 0.008
Zinc	0.010	0.006

[a] Wet chemical analyses. All other impurities are determined by spectrographic techniques.

[b] These analyses are made by the bromine-methanol method. There is doubt in the levels reported. Neutron-activation analysis indicates that substantially less than 1000 parts per million of total oxygen was present in the wrought material, and 1.5- to 2.0-percent beryllium oxide in the feed scrap.

The work experience indicates that ingot soundness is unrelated to the furnace pressure in the range from 10 microns of mercury (Hg) to atmospheric pressure of helium. There is some vaporization of beryllium under vacuum conditions. The amount is negligible, however, because of the oxide blanket formed by the skull over the molten pool. Typical ingots poured at 1350°C and 200-microns Hg experience a surface evaporation just at the solidification point resulting in a fine grain structure on the ingot surface and a film of distillate on the mold wall. This does not occur when castings are poured at the same temperature under atmospheric pressure of helium. In this case, the ingot surface is large-grained and resembles a washboard.

Typical centrifugal castings are shown in Figures 10 (a) through (d). These castings have ranged in sizes from 3-inch diameters to 13-inch diameters, and from 3 inches

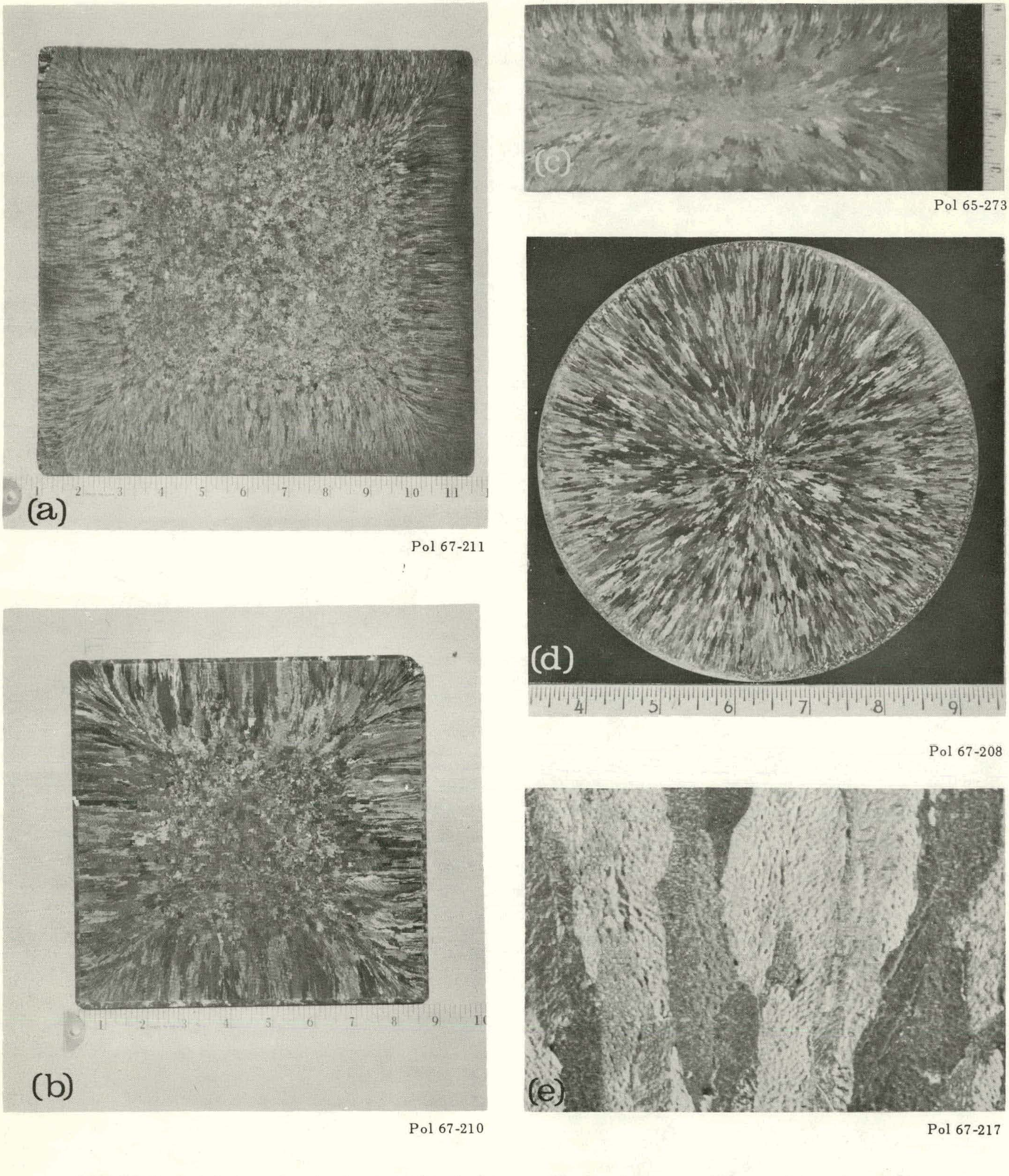

Pol 67-211

Pol 67-210

Pol 65-273

Pol 67-208

Pol 67-217

FIGURE 9. Axial view of grain structure of typical ingots. The sections were all removed from the middle portion of the various ingots and etched in Tucker's solution: 25 milliliters (ml) of hydrochloric acid, 15 ml of nitric acid, 4 ml of hydrofluoric acid, and 25 ml of distilled water; Rectangular, 11- by 11-inch ingot (a); Rectangular, 9- by 9-inch ingot (b); Rectangular, 4- by 9-inch ingot (c); Cylindrical, 6-inch diameter ingot (d); and a close-up (e) at Magnification 7X of the structure (d) taken near the outside diameter.

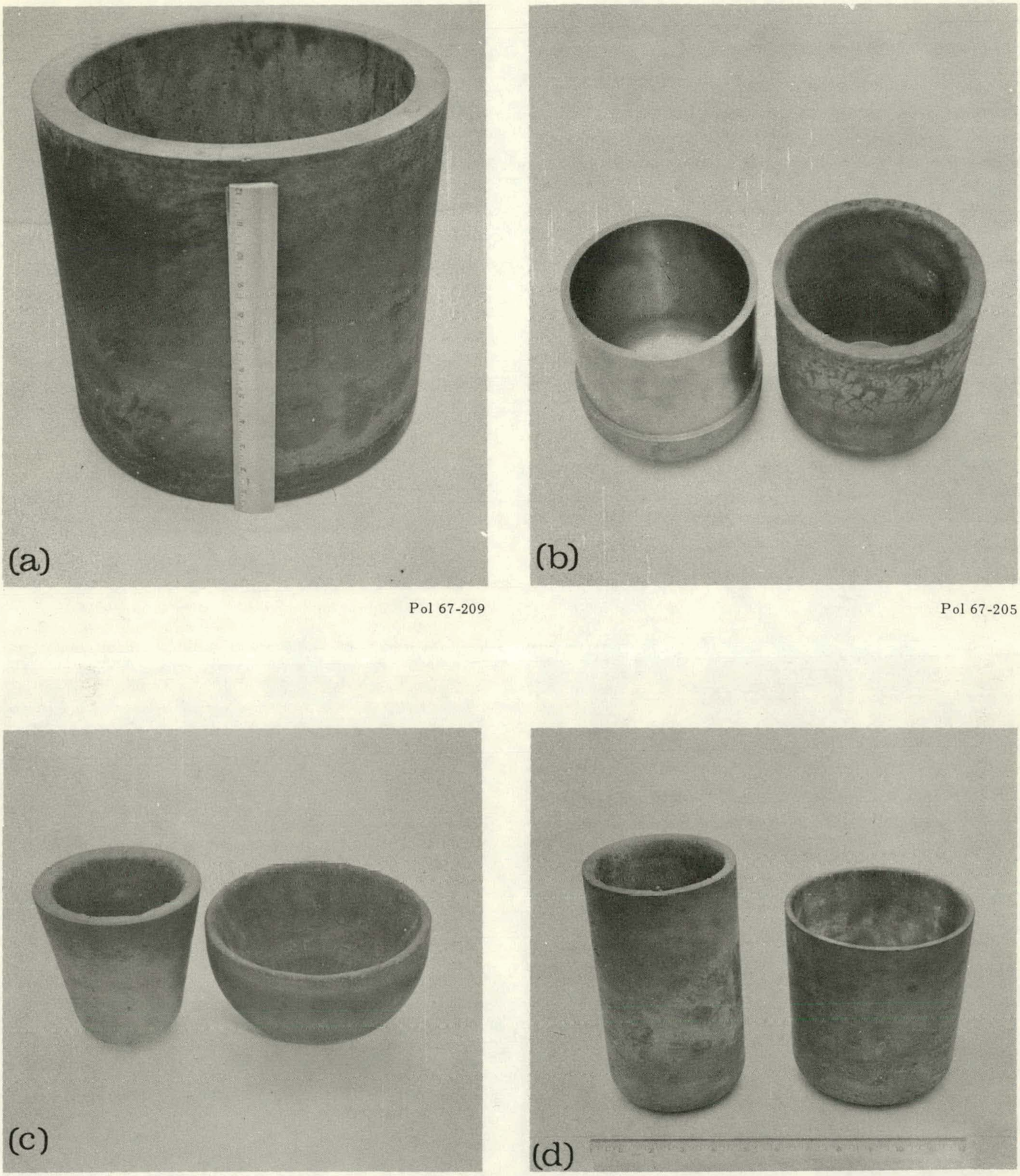

Pol 67-209

Pol 67-205

Pol 67-206

Pol 67-202

FIGURE 10. Various typical experimental centrifugal castings are shown. The cylinder in (a) is the largest made to date, and measures 13 inches in diameter and 13 inches deep. The cylinders in (b) show a partially machined one on the left and an as-cast one on the right. Other typical castings are shown in (c) and (d).

to 13 inches long. Typically, the melt is 1350°C and the mold 300°C at the time of pour.

In general, when the wall thickness exceeds 0.25 inches, cracks appear on the inside surface. These cracks are the result of the thermal gradient existing from the mold wall to the inside of the casting. They can be minimized by increasing the mold-wall temperature and providing a heat sink which promotes faster cooling on the inside of the casting. A separate mold heater will be required to regulate the mold temperature and completely eliminate these cracks.

The grain structure of the machined cylinder in Figure 10 (b) is shown in Figures 11 (a) and (b). Note that the grain size is much finer than for static castings as seen in Figure 9 (e). The apparently equiaxed grain structure is due to truncation of columnar grains which have a diameter-to-length ratio of about 5.

2. Rolling.

EXPERIMENTAL –

a. Canned: Rectangular ingots are sectioned into rolling billets approximately 3.75 inches thick. The operation is carried out on a horizontal, reciprocating-power hacksaw. These billets are degreased, radiographed, and machined to a 3.5-inch thickness. A wash coating is used to protect the beryllium from a potential reaction with the Type-304 stainless steel can at the rolling temperatures. The coating is painted or sprayed onto the machined beryllium billet.

During rolling, the beryllium must be canned to prevent fracturing and oxidation. Type-304 stainless steel is used for the can material because of its strength at elevated temperatures. A typical can (Figure 12) consists of four side-piece sections and two covers, all 0.625 inches thick. The components are clamped

FIGURE 11. An axial view of the grain structure of a centrifugally cast right-circular cylinder is shown in (a) —Tucker's etch. A close-up of this structure is seen in (b) —Tucker's etch, magnification 7X, and can be compared to the structure in Figure 9 (e) of a statically-cast cylinder of the same diameter.

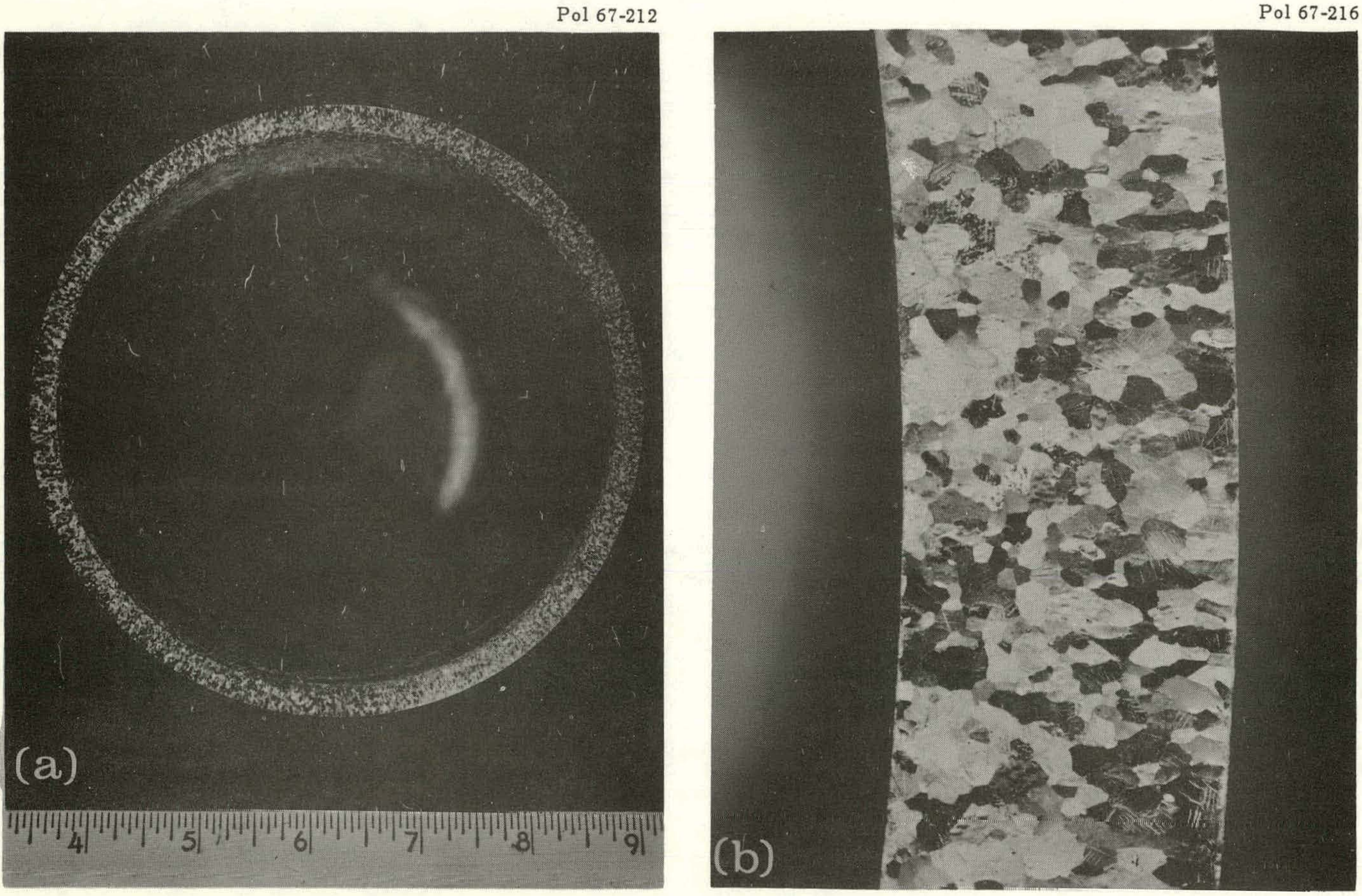

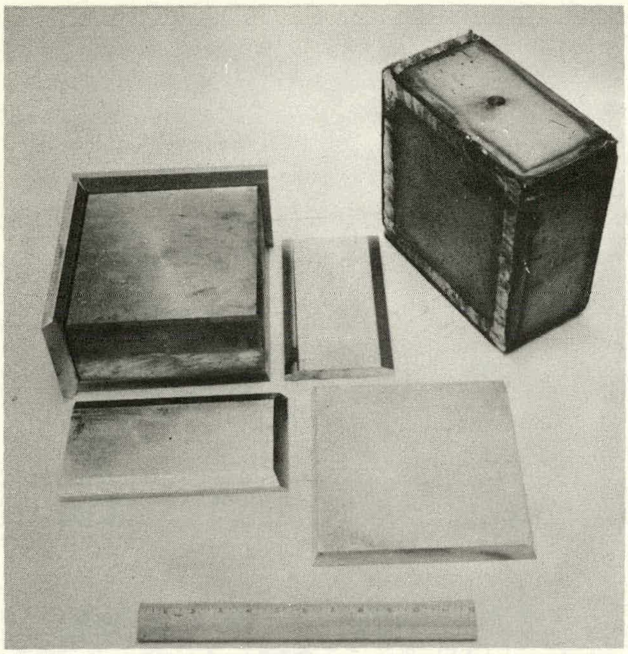

Pol 67-207

FIGURE 12. Major components are shown of a beryllium-rolling assembly. The beryllium billet will be coated prior to canning. In the top right corner is a finished assembly. Note the vent hole in the center of the top.

against a coated billet and welded using Type-308 stainless steel filler rods. The first pass is made using the gas tungsten-arc method. The manual electro-arc with covered electrodes is used to complete the weld. The welded-can assembly in Figure 12 shows the vent hole which allows outgassing of the canned assembly, when it is heated prior to rolling. Just prior to rolling when the can is at approximately 980°C, the hole is closed by welding.

A solutionizing-heat treatment is given to the beryllium (while in the canned assembly) immediately prior to rolling. The heat treatment, 980°C for a minimum of 4 hours, is based on resistivity measurements made at Rocky Flats (5). The effect of this heat treatment on iron in beryllium has been known for some time and is reported in the literature (6).

Most rolling is done on a 42-inch wide, 4-high Loewy mill with work rolls 12 inches in diameter and backup rolls of 42-inch diameters. The mill will withstand a 5,000,000-pound separating force. Less than 500,000 pounds are required to roll the canned beryllium. A resistance-heated, air-atmosphere furnace is used to heat billets. It is capable of 1100° ±20°C. Upon completion of the last pass through the mill, the sheet (still jacketed with Type-304 stainless steel) is transported directly to a pit furnace for an overaging heat treatment of 20 hours at 780°C.

The desheathing operation involves removing the sheet from the furnace at 780°C, transporting it to a guillotine-type shear, and shearing through the composite, 2.5 inches from each edge. If the sheet must be cut into smaller pieces, occasional edge-cracking of the beryllium is avoided by leaving the stainless sheath in place, rather than shearing the bare beryllium.

RESULTS – The 3.5-inch thick beryllium billets are reduced to thicknesses ranging from 0.5 to 0.170 inches (depending upon the ultimate use of the sheet), while sheathed in Type-304 stainless steel. Much work has been done in developing rolling parameters. Table II presents the optimum rolling conditions. The as-rolled surface of a typical beryllium ingot sheet is shown in Figure 13 (a) with a close-up (b) of the surface of the sheet.

The use of Type-304 stainless steel as a can material evolved from work with mild steel, Types 430, 304, and cast 316 stainless steels. Sheet of the highest quality consistently results when Type-304 stainless steel is used. Mild steel yields the characteristic surface condition shown in Figure 14. The ferritic stainless steel evaluated (Type-430) performed somewhat better than mild steel, but not as well as Type-304. Sheet surfaces similar to those

TABLE II. Typical schedule used to hot-roll cast beryllium, canned in Type-304 stainless steel, to sheet at Rocky Flats. Dimensions shown refer to the beryllium thickness, not the composite thickness. Cross-rolling is effected by rotating the billet 90 degrees after each pass through the mill.

Beryllium Thickness Range (inches)	Reduction Per Pass (inches)	Temperature (°C)
3.5 → 2.2	0.215	1040
Reheat - 25 minutes		980
2.2 → 1.14	0.2	980
Reheat - 25 minutes		870
1.14 → 0.81	0.15	870
Reheat - 15 minutes		870
0.81 → 0.55	0.13	870
Reheat - 15 minutes		
0.55 → 0.350	0.10	870
Reheat - 15 minutes		780
0.350 → 0.250	0.065	780
Reheat - 20 hours		780
Shear and remove covers		500-700

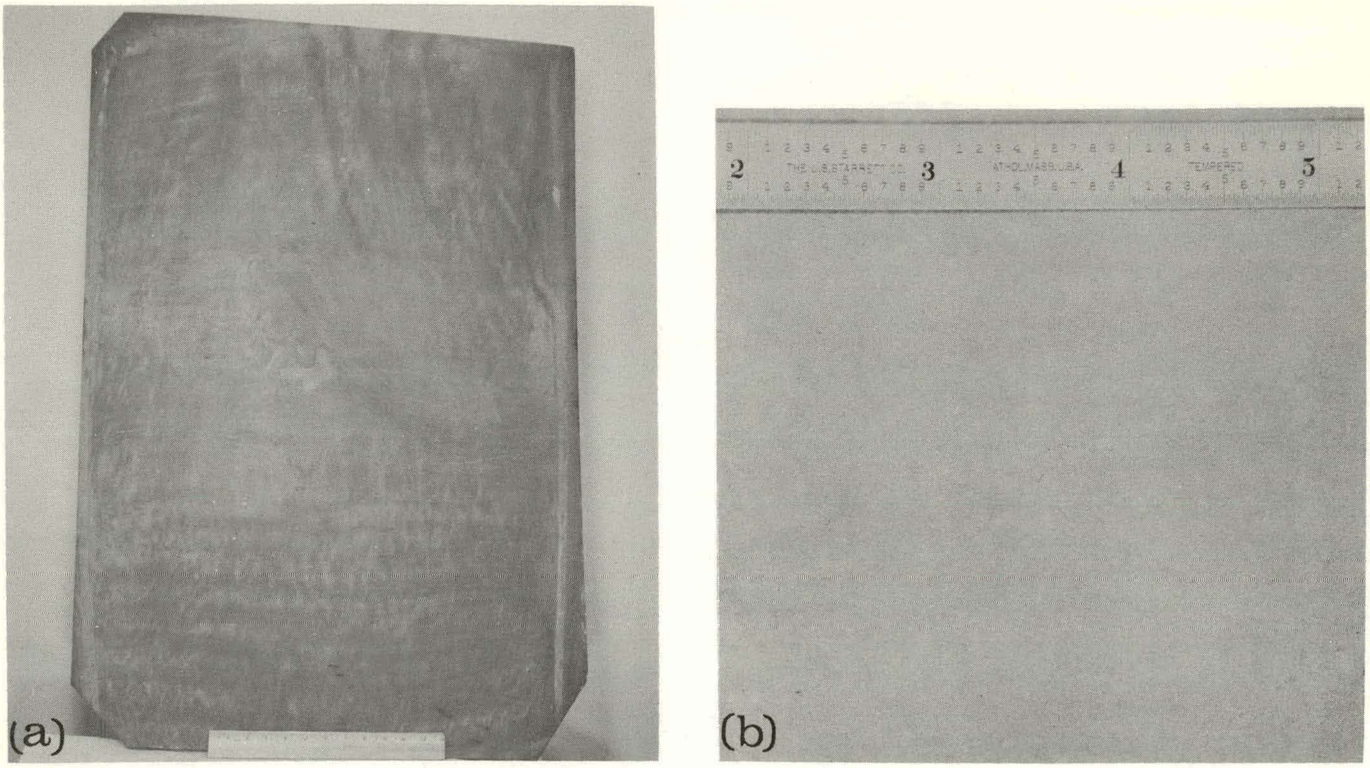

Pol 67-197

Pol 67-196

FIGURE 13. Surface appearance of ingot-sheet beryllium, hot-rolled in a Type-304 stainless steel can. The as-rolled sheet is shown in (a) and a close-up of its surface in (b) (as-rolled). Magnification 1X.

FIGURE 14. Surface of a beryllium-ingot sheet, hot-rolled in a mild steel can. The rough surface is typical of the entire sheet, as-rolled. Magnification 1X.
Pol 65-280

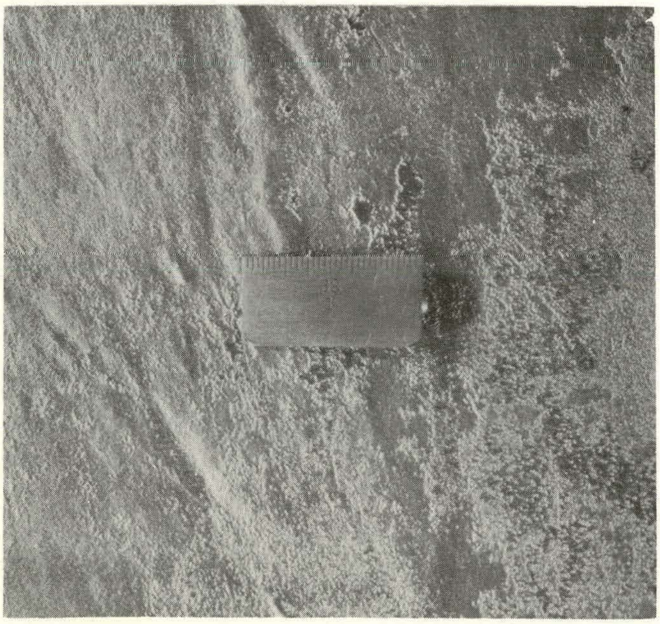

for mild steel resulted. The surface shown in Figure 14 can be traced to the grain pattern of the rolling billet. Different orientations of grains apparently promote variable deformation characteristics at the breakdown temperatures.

Thicknesses of Type-304 stainless steel cans have been varied from 0.375 to 1 inch. The 0.625-inch thick can material seems to be generally the most satisfactory and reliable. While cans thinner than 0.375 inches fail during rolling, there is no upper limit on thickness, although thicknesses greater than 0.625 inches do not contribute to quality or reliability.

Sixty percent reduction in thickness at 980°C or higher is required to completely break down the cast structure. Eighty-five percent reduction in thickness is required to produce sound sheet. Thus, starting with a 3.5-inch thick billet, it is difficult to produce a sound sheet thicker than 0.5 inches. Further reduction in thickness improves the surface quality, reduces the grain size, and increases the properties of the sheet. The dependence of grain size upon total reduction in thickness and finish-rolling temperature is shown in Figures 15 and 16, respectively.

The post-rolling, 20-hour heat treatment mentioned in Table II is essential to the successful shearing and forming of rolled sheet of this grade. The as-rolled sheet is completely brittle at temperatures as high as 800°C, and any attempts at shearing for desheathing result in extensive cracking. The sheet must be quickly transported to the soaking furnace after rolling to prevent the assembly from cooling while the sheath restrains the beryllium.

After the heat treatment, the composite can be sheared at 600°C without cracking. The heat-treatment is a combination recrystallization and overaging anneal. The time-temperature profile was determined by resistivity measurements made at room temperature on specimens quenched from the overaging temperature. The recrystallization temperature for this material has been determined to be 730°C (7). Extensive grain growth occurs above 820°C.

The principal difficulties encountered during rolling are:

Temperature – If frequent reheats are not used, two characteristic effects are observed:

a. Curling of the canned assembly occurs due to preferential surface chilling. Proper lubrication of the work rolls is also needed to prevent curling.

b. A characteristic surface cracking occurs in localized areas. The cracks are parallel, 0.125 to 0.5 inches apart, propagate perpendicular to the sheet surface, and turn parallel to the plane of the sheet near the midplane.

Weld Failures – It is essential that the cans have sound, full-penetration root welds. When a can fails during rolling, the failure invariably initiates at the root of the weld. Curling can cause excessive strain in the weld and promote such failures. The use of a

FIGURE 15. Data give the dependence of grain size upon total reduction in thickness during canned rolling of ingot-sheet beryllium. The original billet was 3.5 inches thick. Final rolling temperature for each was 760°C.

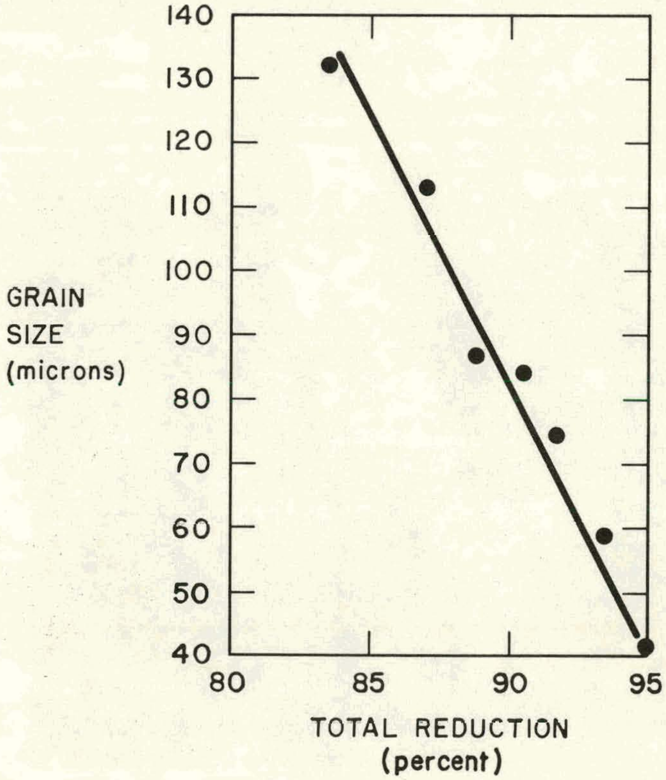

FIGURE 16. Data show the dependence of grain size of ingot-sheet beryllium upon the finish-rolling temperature. Billets of 3.5 inches thick were rolled to 0.350 inches per Table II (Page 11) and finish-rolled to 0.175 inches at the temperatures indicated on the curve.

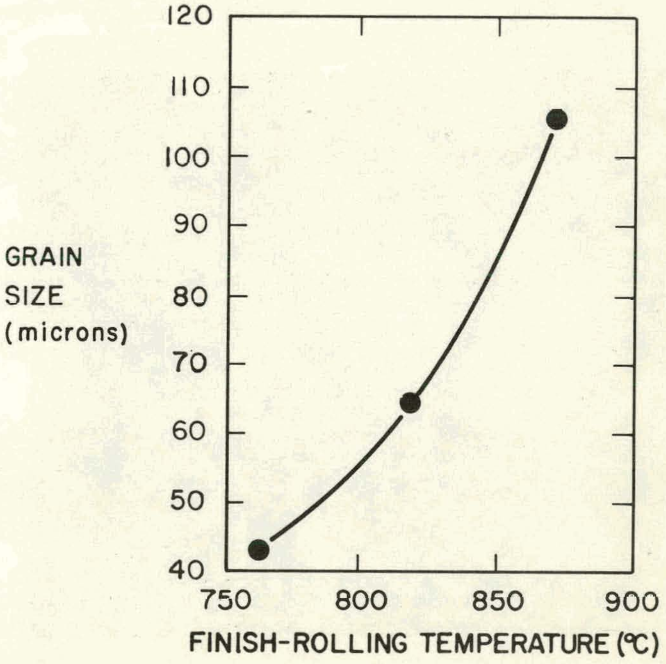

welding-filler rod with low carbon content is required to prevent brittle welds.

Duplex Structure – Insufficient reduction during the hot breakdown and insufficient reduction during final canned rolling stages often result in a duplex structure. This appears as elongated grains (typically 40 by 200 microns) surrounded by fine, equiaxed grains (typically 20-micron diameters). This structure, once formed, can not be eliminated by continuing the deformation bare-rolling to as thin as 0.100 inches. Duplex (a) and typical (b) structures are compared (see Figure 17).

b. Bare-Rolling: It is possible to roll beryllium sheet in air at temperatures below 800°C. The ingot sheet prepared at Rocky Flats can be removed from the stainless sheath at any thickness below 0.35 inches, and rolled bare at 780°C from an atmospheric muffle furnace. Reductions of 10 percent per pass are used from a 0.35- to a 0.1-inch thickness. Reductions of 15 percent per pass can be used below 0.100 inches. Reheating 5 to 10 minutes after each pass is necessary to prevent cracking of the sheet.

Most bare-rolling is done on an 8-inch wide, 2-high laboratory mill which has a 100,000-pound maximum separating force. Tungsten disulfide is sprayed onto the 5-inch diameter rolls for lubrication. A surface speed of 85 feet per minute is used.

An etchant must be used to remove surface contaminants from the bare-rolled beryllium sheet. If foil (0.002 to 0.010 inches thick) is desired, the etching must be performed when the stock is 0.025 inches thick, as well as after the final pass. The most successful etch contains 2-percent hydrofluoric acid (HF), 45-percent nitric acid (HNO_3), and 53-percent distilled water (H_2O). The procedure involves agitation of the etchant and swabbing the sheet surface with 400-grit metallographic paper. About 0.001 inches are removed from each surface.

RESULTS – After the beryllium ingot has been reduced in thickness by 90 percent (to 0.350 inches), it can be desheathed and rolled bare. Bare-rolling has many advantages. It offers excellent control of the rolling temperature. Sheet-thickness variation is minimized and the surface acquires the finish of the rolls. Mechanical properties improve and grain size decreases due to the increased reduction.

Cross-rolling can be accomplished by equal amounts of unidirectional rolling in mutually perpendicular

FIGURE 17. Photomicrographs (polarized light) of duplexed (a) and typical (b) microstructures of ingot-sheet beryllium rolled to 0.250 inches per Table II (Page 11). Magnifications 100X.

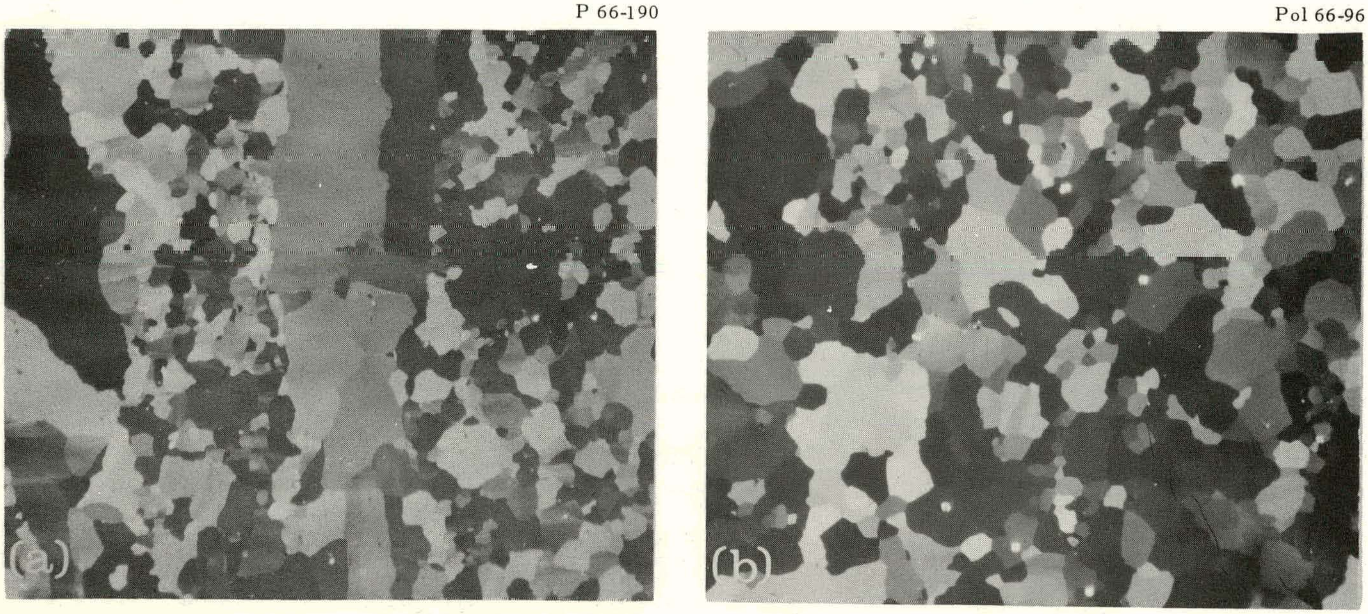

directions. It can also be affected by rotating the sheet 90° after each pass. Sheet (which is sound according to radiographic, dye penetrant, and helium leak-checks) can be produced in thicknesses ranging from 0.125 to 0.002 inches. Typical thickness variations for several thicknesses of bare-rolled sheet are shown in Table III. The largest sheet produced to date by bare-rolling measures 30 by 60 by 0.075 inches.

Sheet can be bare-rolled with or without lubricant; some surface contamination results in either case. The as-rolled beryllium surface is dependent on the condition of the mill-roll surfaces. As-rolled surface finishes of 6 to 10 microinches are common. It is possible to remove surface contamination by etching. A 10-microinch finish will be about 20 microinches, after removal of all visible contamination.

The recrystallization behavior of bare-rolled beryllium for various reductions is illustrated in Figure 18. The starting material was a 0.250-inch canned rolled sheet.

TABLE III. Typical thickness variation for beryllium foil produced at Rocky Flats by bare-rolling ingot sheet. All specimens were etched prior to inspection, as described in experimental section.

Thickness (inches)*	Specimen Size (inches)	Number Pieces Checked	Average Variation (inches)	Surface Finish (microinches, AA)
0.002	0.5 × 4.0	6	±0.00015	20
0.005	2.0 × 2.5	60	±0.00030	20
0.010	6.0 × 6.0	4	±0.0006	20
0.025	6.0 × 6.0	4	±0.0009	10

* Ball micrometers were used for thickness measurements.

FIGURE 18. Grain size versus annealing temperature for ingot-sheet beryllium, can-rolled from 3.5 inches to 0.250 inches and bare-rolled from 0.250 inches to the reductions indicated. The anneals were all one hour long.

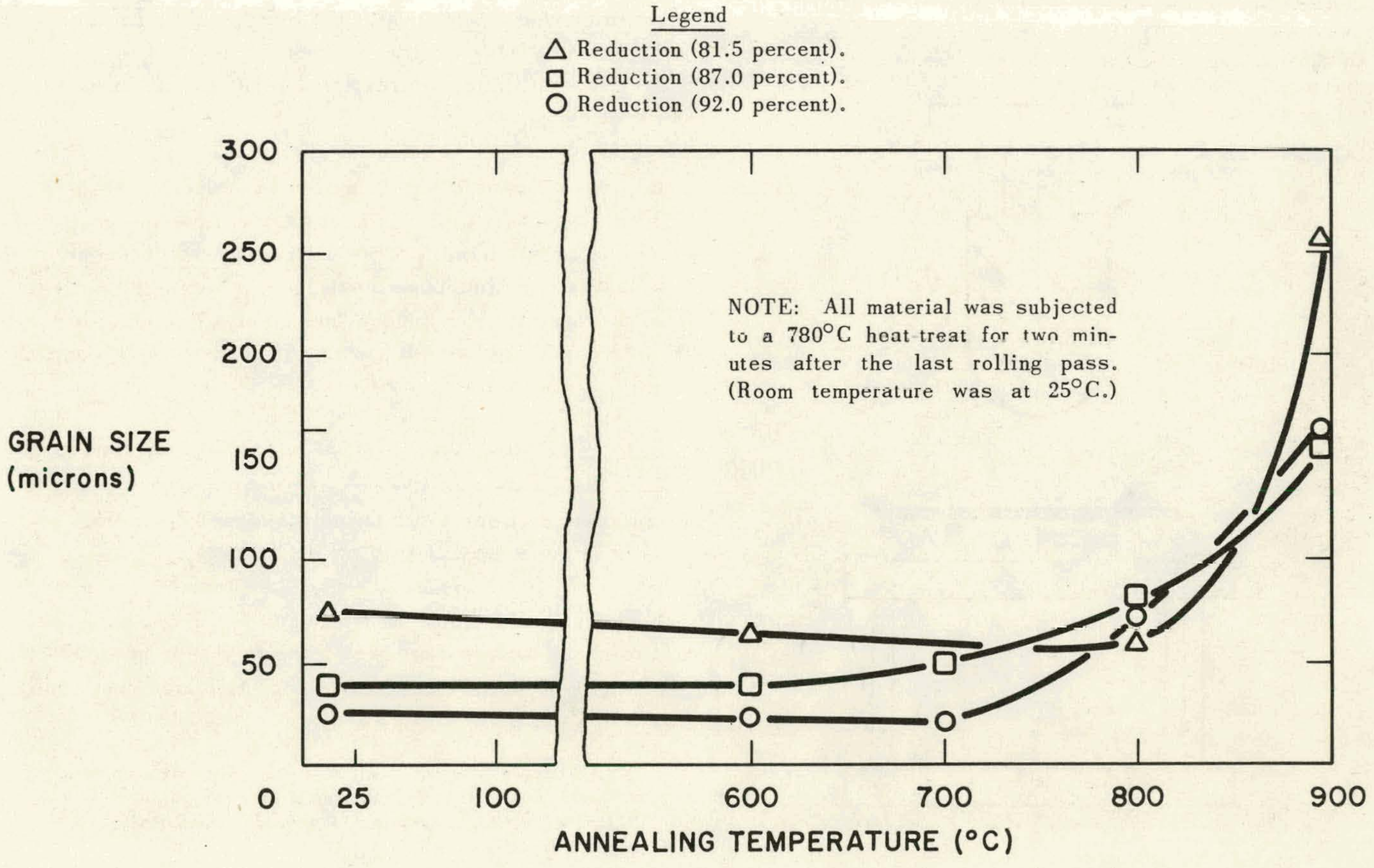

NOTE: All material was subjected to a 780°C heat-treat for two minutes after the last rolling pass. (Room temperature was at 25°C.)

3. Forming.

EXPERIMENTAL – Two hydraulic presses are used for deep drawing: (a) A 30-ton, single action, Tinius Olsen testing machine, and (b) A 300-ton, double action, Erie press.

The 30-ton press has a variable drawing speed, from 0.010 inches per minute to 6 inches per minute. The 300-ton press has a fixed drawing speed of 20 inches per minute.

Three distinct types of mechanical tooling are used for deep drawing:

a. A punch-and-draw ring, without hold-down (Figure 19).

b. A punch-and-draw ring, with fixed hold-down (Figure 20).

FIGURE 19. Cross-sectional view of a punch- and draw-ring used to deep-draw ingot-sheet beryllium without any hold down of the forming blank. If the clearance between punch- and draw-ring is slightly greater (10 percent) than the stock thickness, the work can be done as an ironing operation.

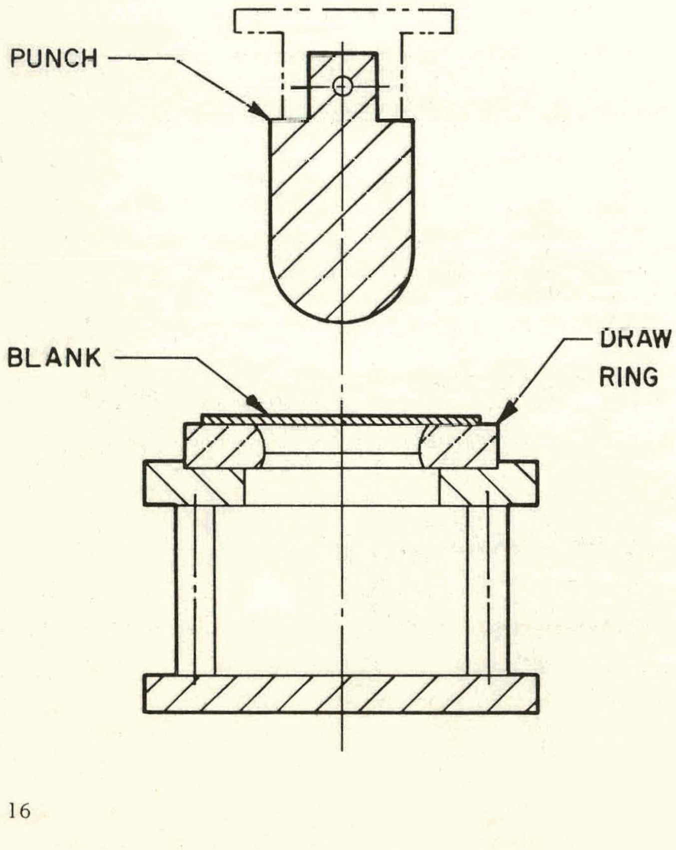

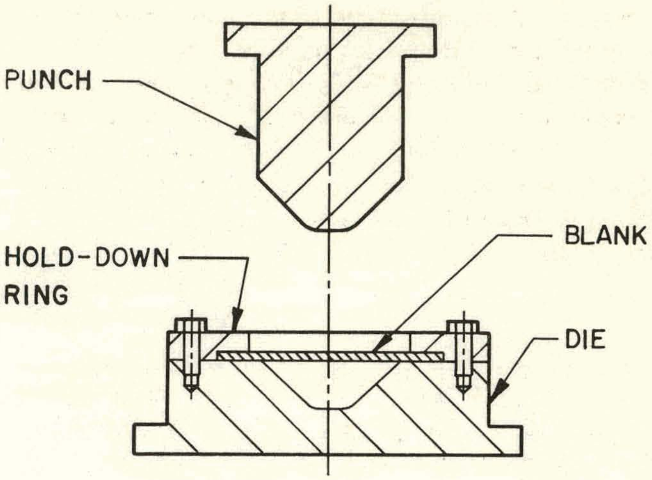

FIGURE 20. Cross-sectional view of the tooling used to form beryllium ingot sheet utilizing a fixed hold-down pressure to prevent wrinkling. The screws provide the fixed hold-down by securing hold-down ring against blank.

c. A punch-and-draw ring, with variable hold-down (Figure 21).

Max-el 3.5 tool steel,[1] hardened to R_C40, is used for the draw ring. Meehanite cast iron[2] is used for the punch and sizing cavity. Max-el 3.5 is used for deep draws where differential thermal expansions are of concern.

In general, the tooling is heated by induction using a 60-cycle, 40-kw unit. Punches are heated integrally with the rest of the tool, or are provided with separate tube heaters. Induction heating is the easiest method of reaching the die temperature used, although other techniques can be used, when the temperatures desired are not excessive.

Lubrication is provided by placing a layer of 0.015-inch thick asbestos sheet, impregnated with colloidal graphite, between the forming blank and draw ring. This is done immediately prior to forming.

Forming temperatures depend upon blank geometry. The forming blanks are preheated to 780°C in an air-atmosphere furnace when the stock thickness is 0.125

---

[1] Crucible Steel Company's oil-hardening, free-machining steel from Crucible Steel Company, Pittsburgh, Pennsylvania.

[2] Trade name for gray-cast iron of Greenlee Foundries, Chicago, Illinois.

inches or greater. This temperature is decreased to as low as 300°C as the blank thickness approaches 0.050 inches. Tooling temperatures vary correspondingly. For example:

Blank Thickness (inches)	Forming-Blank Temperature (°C)	Punch Temperature (°C)	Draw-Ring Temperature (°C)
0.050	300	300	300
0.075	400	350	400
0.150	750	500	650

It is imperative that the formed part be removed from the punch quickly (within several seconds) when forming at 750°C. This prevents the blank from shrinking onto the punch and cracking. The wear plate is used to strip the part from the punch after the forming cycle is completed.

Some work has been done roll-forming hollow cylinders from sheet. A manually-operated, multiple-bend tool is used. The tooling is not heated. The beryllium is heated to 700°C (as required) in an atmospheric muffle furnace, just prior to bending. Usually about 12 passes, each bending the sheet to a smaller radius, are used until the sheet forms a complete cylinder. Electron-beam closure welding is employed.

RESULTS – Some of the geometries formed at Rocky Flats from ingot-sheet beryllium are shown in Figures 22, 23, and 24. Parts have been formed in sizes ranging from 2- to 8-inch major dimensions and 0.010- to 0.400-inch wall thicknesses. All forming is done with an as-rolled surface on the forming blank. The forming blanks are obtained from the sheet by trepanning or by hot blanking. The thickness variation within an individual forming blank is minor (±1 percent); however, the variation from blank to blank can be as much as ±5 percent. This variation is usually accommodated by providing a sizing cavity along with the draw ring. After the part has been deep-drawn with sufficient clearance between the punch and draw ring, it can be accurately sized in the cavity.

The lubrication technique used is the most important aspect of the reliability of the hot-forming operation. Lubricants applied directly to the blank burn away to cause galling between the beryllium and the draw ring. This results in roughening of the draw ring and failure of the beryllium. The graphite-impregnated asbestos sheet provides a continuous film of lubrication during the drawing operation. It is also an effective thermal barrier which helps maintain the

FIGURE 21. Cross-sectional view of tooling used to form and accurately size ingot-sheet beryllium with variable hold-down pressure. The variable hold-down pressure is applied by the cushion pins which hold the draw blank against the draw ring.

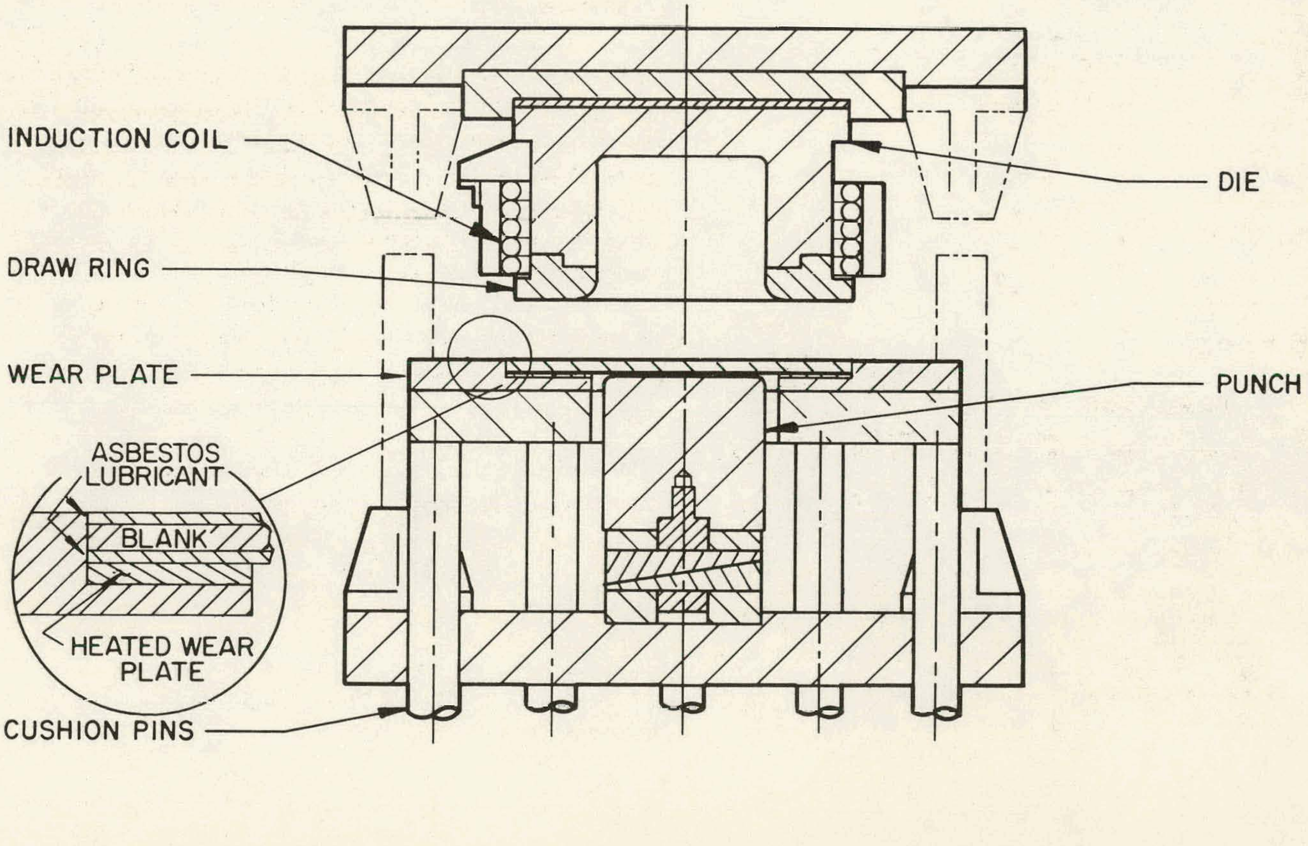

Pol 67-201

FIGURE 22. Typical experimental as-formed beryllium parts formed on Type-1 tooling (Figure 19). The cylindrical skirts are removed by trepanning and are machined to rings. The part on the left is partially machined. Light lines on the inside surface of the part at right resulted from severe ironing.

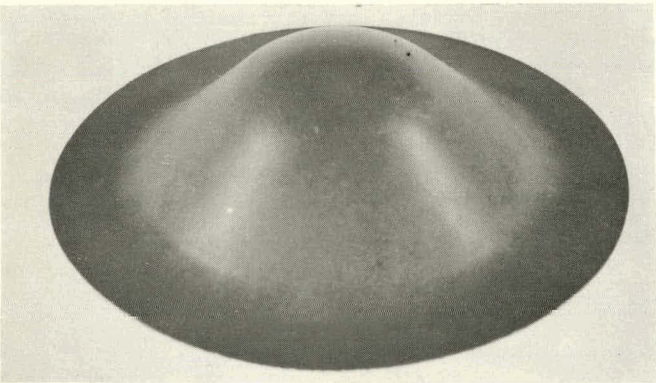

FIGURE 23. As-formed beryllium cone made on Type-2 tooling (Figure 20).

FIGURE 24. Typical experimental parts deep-drawn from ingot-sheet beryllium. The part on the left is machined. Parts were formed on Type-3 tooling (Figure 21). Note the absence of a flange.

Pol 67-309

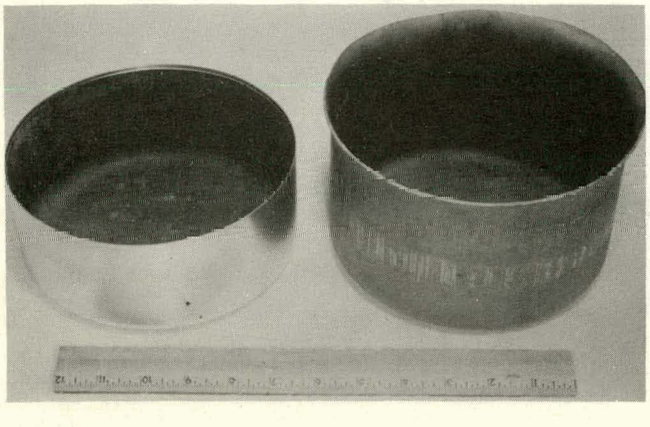

temperature of the forming blank during forming. A new layer of felt is used for each forming operation. No reworking is required when this lubrication technique is used.

It has been determined with beryllium at Rocky Flats that blank diameter (D) to blank thickness (t) ratios (D/t) greater than 24, require guiding or hold-down as shown in Figures 20 and 21.

Components that have D/t ratios as high as 200 can be formed, with hold-down, on the tooling shown in Figure 21. Preliminary work indicates that components can be drawn with D/t ratios up to 350.

Rather large reductions[3] are possible with beryllium at elevated temperatures. Work to date has shown it is possible to deep-draw a D/t ratio of 200 to a reduction of 57 percent. The maximum recommended single stage reductions for mild steel and austenitic stainless steels is 50 percent (8). Rather high hold-down pressures are required to prevent wrinkling.

The unusual metal-flow behavior of beryllium is compared to that of stainless steel in Figure 25. The data for the stainless shape are taken from Reference 8. The data for beryllium are taken from a geometrically similar shape formed at Rocky Flats. The strains have been adjusted for dimensional differences, so the data can be considered as coming from identical shapes.

It is not unusual that the negative strain (thinning) in the Type-304 stainless steel is much greater than for beryllium. Type-304 stainless steel undergoes a rather high reduction in area. This coupled with its high strain-hardening coefficient accounts for its excellent deep-drawing characteristics. The absence of thinning in ingot-sheet beryllium is unusual, however. Obviously, beryllium does not flow, even at elevated temperatures, by thinning. This is due to the complex stress state during deep-drawing and the limited number of slip systems available.

Theoretically (8), the plastic strain in the outer fibers of a formed part can be determined by the formula:

$$t = t_o (D_o/D)^{1/2}$$

---

[3] Reduction = R = $(1 - d/D)\,100$; (d = part diameter, and D = blank diameter).

t = final thickness of fiber

t_o = initial thickness of fiber

D = final diameter of fiber

D_o = initial diameter of fiber

This formula results from the laws of plasticity (9), assuming uniaxial compression (in the circumferential direction). Thus, the thickening is independent of the material. Both the stainless steel and beryllium in Figure 25 should have exhibited 35-percent plastic strain at the flange edge. Only the stainless did, as can be noted. The reason the beryllium thickened by only 25 percent is that the high hold-down pressure (S_t) used has become a significant fraction of the circumferential compressive stress (S_c). This invalidates the assumption of uniaxial stress and alters the strain formula. For example, if $S_t = 0.2\ S_c$; then the plastic strain in the flange fiber is calculated from $t = t_o\ (D_o/D)^{1/3}$, according to the same laws of plasticity. Using the revised formula, the strain in the flange of the parts in Figure 25 should be +24 percent, which is close to that measured.

Further confirmation of the validity of the latter formula can be obtained from Table IV. This contains thickening data for several different part geometries and sizes, reduced to strain values. Note that

NOTE: Plastic Strain (ϵ_t) = $(t - t_o)/t_o$; where t = thickness after draw, and t_o = thickness before draw.

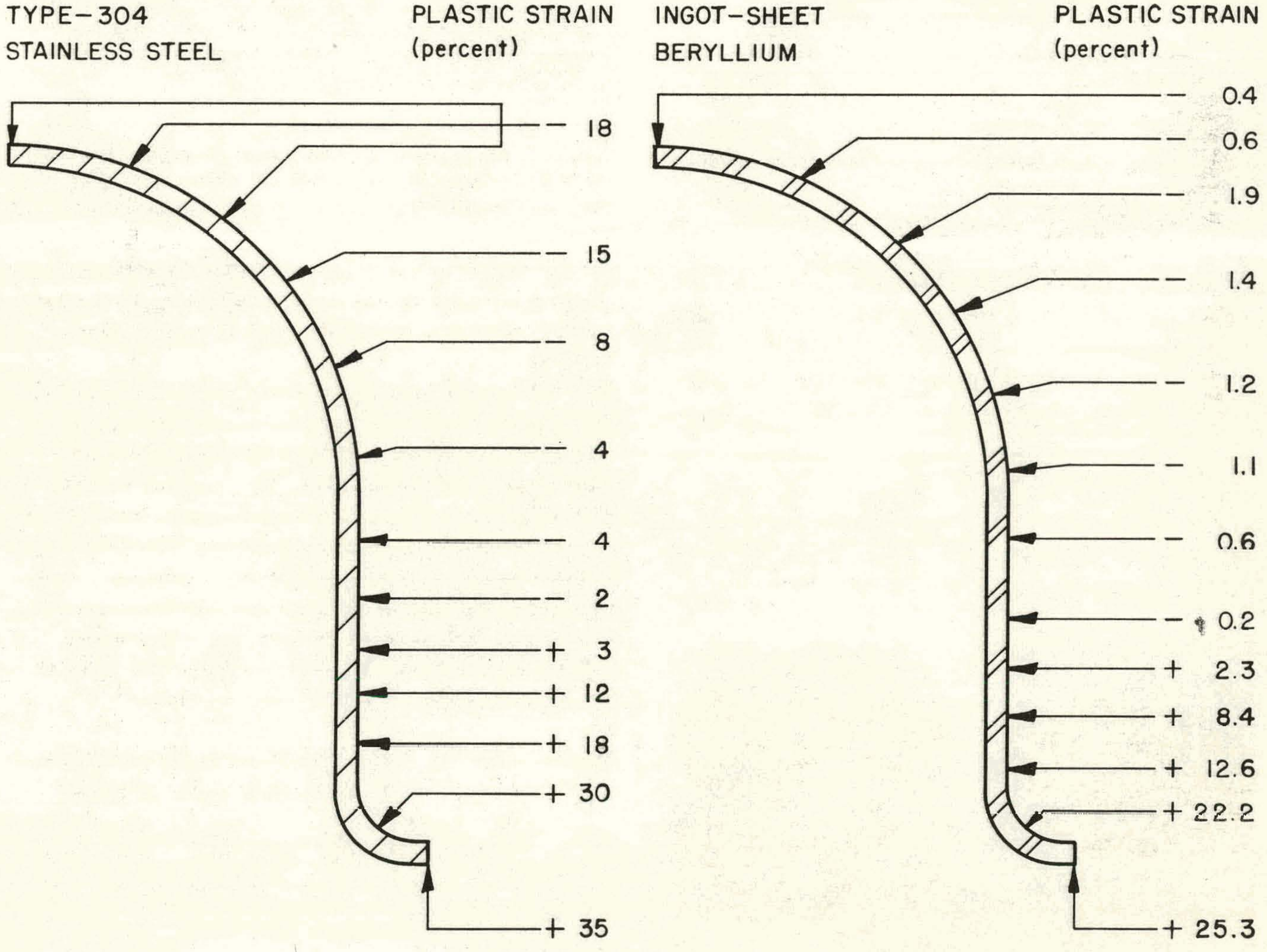

FIGURE 25. Cross-sectional views comparing the plastic strains resulting from deep-drawing, geometrically similar domes of Type-304 stainless steel and ingot-sheet beryllium. Beryllium does not thin or thicken as much as Type-304 stainless steel.

the strain values calculated from the normal formula do not agree with observed data, while those calculated from the modified formula do agree. Part Type 4, the only exception, came from the limited clearance between punch and die which resulted in interference. This indicates the level of interference, or ironing, beryllium can undergo without failing.

TABLE IV. Strain values of the outer fibers of various beryllium-part types deep-drawn at Rocky Flats using variable hold-down tooling. Measured values are compared to those calculated by two formulas.

Part Type	Calculated Strain (percent) [a]Formula 1	[b]Formula 2	Measured Strain (percent)
1	24	15	16
2	26	16	17
3	33	21	20
4	30	19	[c] 9

[a] Formula 1: $t = t_0 (D_0/D)^{1/2}$.

[b] Formula 2: $t = t_0 (D_0/D)^{1/3}$.

[c] Clearance between punch and die allowed only 9-percent strain to obtain ironing.

If the forming conditions are proper, beryllium can be formed into complex shapes, despite its inability to thin. These include effective lubrication, optimized hold-down pressure, and close control of tooling and blank temperature.

Several typical roll-formed cylinders are shown in Figure 26. These parts are round within ±0.010 inches on the diameter. The 0.020-inch thick part on the right was rolled, using 11 passes, at room temperature to form the complete cylinder. The center part, 0.050 inches thick, required a 350°C preheat prior to each bend to prevent cracking. The part on the left, 0.090 inches thick, required a 500°C preheat. None of the parts cracked during rolling.

FIGURE 26. Typical experimental parts roll-formed from ingot-sheet beryllium. Electron-beam closure weld can be seen on the outside diameter of the center part and the inside diameter of the part on right. Surfaces shown as-rolled.
Pol 67-199

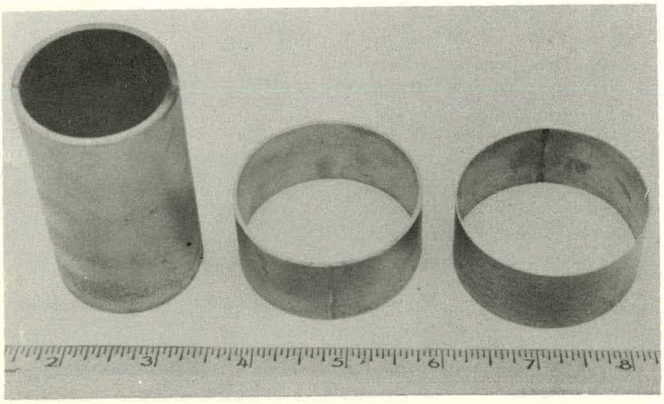

PROPERTIES OF MATERIALS

1. Physical.

The average density of ingot-sheet beryllium is 1.847 grams per cubic centimeter (g/cm^3) (10). The variation in density is much less in ingot sheet than in powder-metallurgy product. Table V contains a statistical comparison of density of powder-metallurgy product, ingot sheet, and parts drawn from ingot sheet.

The resistivity of ingot-sheet beryllium is a function of the heat treatment given to the material. Table VI contains resistivity data of ingot sheet given various heat treatments. The resistivity of typical ingot sheet, aged 20 hours at 780°C, is 4.8 micro-ohm centimeters.

TABLE V. Statistical analysis of the density of various types of beryllium. All tests performed at Rocky Flats. Measurement accuracy was ±0.001 grams per cubic centimeter.

Material	Number of Samples	Average Density (g/cm^3)	Range of Density (g/cm^3)	Standard Deviation (g/cm^3)
Powder-Metallurgy Beryllium[a]	22	1.847	1.832 to 1.864	0.007
RFD Ingot Sheet	48	1.847	1.843 to 1.850	0.002
Parts from Ingot Sheet	83	1.848	1.845 to 1.852	0.0012

[a] Type S-200, hot-pressed block.

TABLE VI. The resistivity of ingot-sheet beryllium given various heat treatments at Rocky Flats. All samples are from the same sheet. The chemical analysis of this material is similar to that given in Table I (Page 7).

Sample No.	Heat Treatment	Temperature (°C)	Time of Temperature (hours)	Resistivity (micro-ohm-centimeter)
1	Solutionizing	980	2	6.12
2	Aging	875	24	6.08
3	Aging	850	6	5.77
4	Aging	850	24	5.63
5	Aging	825	16	5.78
6	Aging	825	24	5.02
7	Aging	800	48	5.14
8	Aging	780	20	4.80

2. Mechanical.

EXPERIMENTAL – Mechanical properties of ingot-sheet beryllium are determined on a Tinius Olsen, Super L, 60,000-pound capacity testing machine. The normal test specimen is a flat bar with a rectangular cross section as shown in Figure 27. Occasionally, the American Society for Testing and Materials (ASTM) $^3/_8$-inch round threaded standard tensile bar is used. A 0.002-inch taper to the center of the reduced section is employed to prevent failure in the threaded section.

The specimen design for electron-beam welded sheet is shown in Figure 28. The normal specimen is inadequate because failure usually occurs in the parent metal.

Sample preparation, although slightly different for each specimen design, consists of the following steps:

a. Machining: The final three cuts are 0.005, 0.003, and 0.001 inches deep. Using this procedure, twinning damage occurs to a depth of approximately 0.002 inches.

b. Etching: The twinned surface layer is removed by etching 0.002 inches per side in a solution of 50 grams of chromic acid (Cr_2O_3), 25 ml sulfuric acid (H_2SO_4), and 450 ml orthophosphoric acid (H_3PO_4) at 150°F.

c. Inspection: Radiographic and dye penetrant inspection of each specimen is employed to detect cracking.

Extensiometers are used to measure elongation. Their output is used to automatically plot a load-elongation curve. Yield strength is determined at 0.2-percent offset using this curve. Strain rate is usually 0.002 inches per inch per minute (in/in/min). Elongation is measured by assembling the fractured specimens and comparing the initial and final gage lengths using a Vernier scale. The gage length is located with the use of scribe lines on Dykem.[4]

Elevated temperature tests are performed in air, using a tubular muffle furnace. Temperature readings are accurate and uniform along the specimen length within ±25°C. A special elevated temperature extensiometer is used to record elongation.

RESULTS – The properties of ingot-sheet beryllium depend primarily upon the following:

a. Percent reduction by rolling.

b. Amount of unidirectional rolling.

c. Final rolling temperature.

d. Grain size.

e. Heat-treatment.

---

[4] Commercial bluing, a product of The Dykem Company, St. Louis, Missouri.

FIGURE 27. Tensile specimen design for ingot-sheet beryllium. (Inch dimensions.)

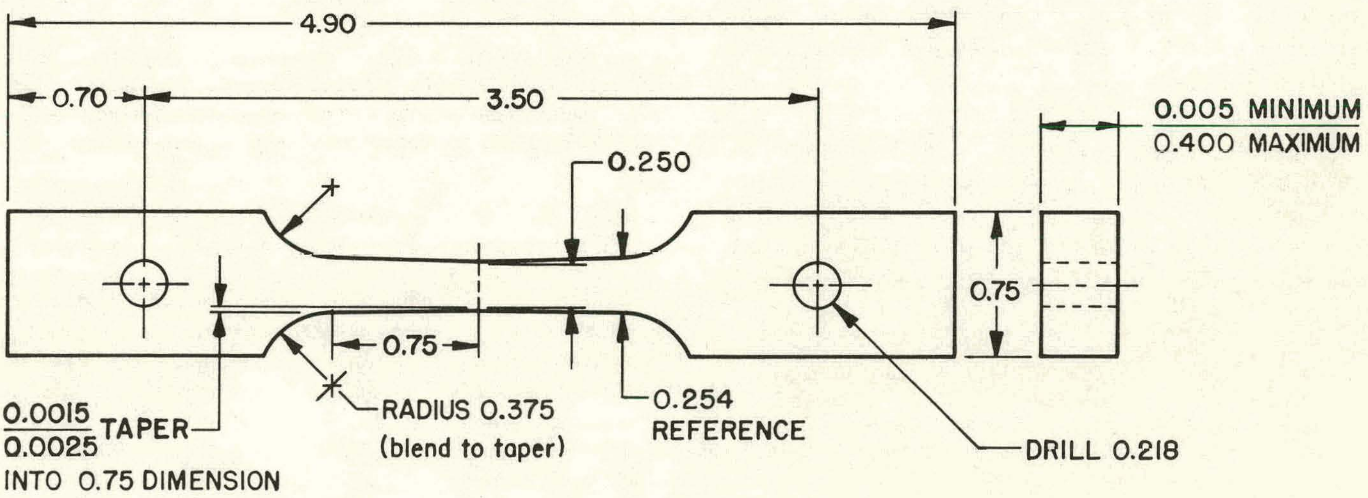

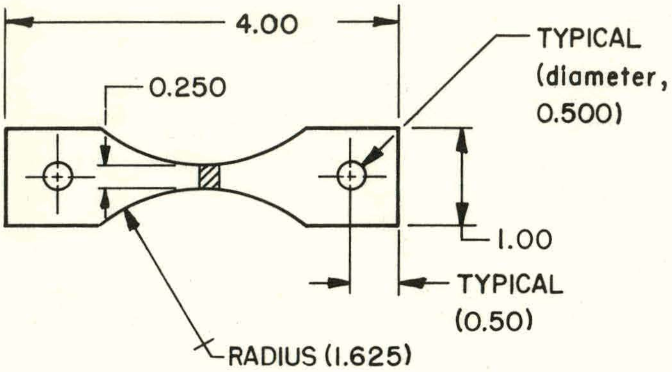

FIGURE 28. Tensile specimen design used to test electron-beam welds of ingot-sheet beryllium. The thickness of the bars can vary, but is usually 0.125 inches. The bars are neither etched nor annealed, after machining. (Dimensions as noted are in inches.)

Some of these relationships have been studied at Rocky Flats and are discussed below.

Average room-temperature mechanical properties of ingot-sheet and powder-metallurgy beryllium are compared below:

	Ultimate Tensile Strength (pounds per square inch)	Yield Strength (pounds per square inch)	Elongation (percent)
Ingot Sheet	36,800	29,600	3.0
Powder Product:[5]			
N-50-A	35,000	25,000	1.0
N-200-A	40,000	30,000	1.0

The ingot-sheet data result from a statistical study involving 8 different sheets and 48 test specimens prepared at Rocky Flats. The detailed results are contained in Table VII.

The effect of percent reduction by can-rolling on the mechanical properties of ingot sheet is shown in Figure 29. This same effect is shown in Figure 30 for bare-rolling various amounts from 0.315-inch starting stock. The data of Figure 30 is also plotted in Figure 29. Note the improvement in properties that can be accomplished by effecting further reduction by bare-rolling.

The importance of minimizing the final rolling temperature can be seen in Figure 31. The grain size decreases and the strength increases as the final rolling temperature nears the 730°C recrystallization temperature.

TABLE VII. Statistical data on the mechanical properties of 0.250-inch, ingot-sheet beryllium. The eight sheets involved were can-rolled per schedule in Table II (Page 00).

	Ultimate Tensile Strength (pounds per square inch)	Yield Strength (pounds per square inch)	Elongation (percent)
Number of Specimens	19	18	19
Average Value	36,800	29,600	3
Range	28,800 to 45,700	22,200 to 36,600	1-5
Standard Deviation	6,000	4,100	1.5

The effect of various heat treatments upon the mechanical properties of ingot-sheet beryllium are shown in Table VIII. Note that the first 20-hour anneal decreases the yield strength and increases the ductility. This agrees with the observation that after rolling of beryllium, it can not be sheared from the can without an anneal. The ultimate tensile strength is affected more severly than the yield strength by the 980°C anneal, which caused excessive grain growth.

TABLE VIII. Average mechanical properties of ingot-sheet beryllium can-rolled to 0.200 inches and subjected to various heat treatments. (At least two specimens per data point.)

Heat Treat	Ultimate Tensile Strength (pounds per square inch)	Yield Strength (pounds per square inch)	Elongation (percent)
As-rolled	38,600	37,900	1
780°C - 20 hours	37,500	27,000	2
980°C - 2 hours	23,300	21,000	1
980°C - 2 hours 780°C - 20 hours	23,300	18,400	1

---

[5] The data results from specification sheets of the Brush Beryllium Company dated November 1, 1961, and from sheets of the Beryllium Corporation dated October 1963. The N-50-A has a nominal 0.9-percent beryllium oxide content.

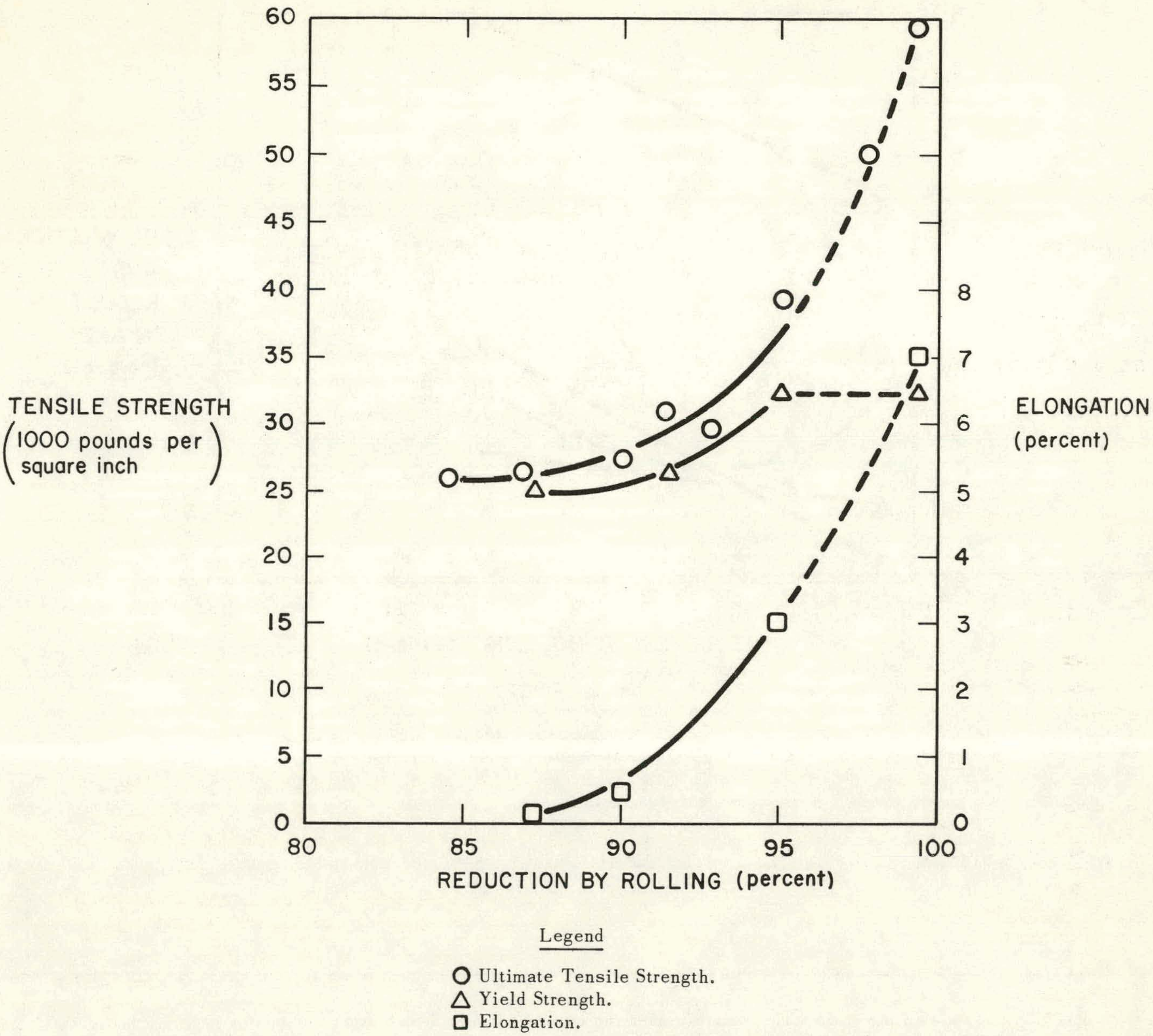

FIGURE 29. Room-temperature mechanical properties of ingot-sheet beryllium can-rolled to various reductions. The dashed line indicates data taken from Figure 30. All material was cross-rolled and the finish-rolling temperature was 780°C. Points are the average of at least two tests.

The effect of unidirectional rolling is shown in Table IX. Note the improved mechanical properties of bare-rolled material over can-rolled, resulting primarily from the increased reduction. Note also that unidirectional rolling results in further increase in strength, but a decrease in ductility compared to the same amount of cross-rolling.

The elevated temperature mechanical properties of beryllium ingot sheet are shown in Figures 32 and 33. Figure 32 contains data for sheet can-rolled to 0.250 inches and Figure 33 for a similar sheet bare-rolled from 0.315 to 0.025 inches. Both sheets were cross-rolled. The thickness of the test specimens from the bare-rolled sheet was 0.021 inches with 0.004 inches being removed by etching.

Note that the ultimate strength of the bare-rolled material exceeds that of can-rolled by 25,000 pounds per square inch (psi) at room temperature, but is the

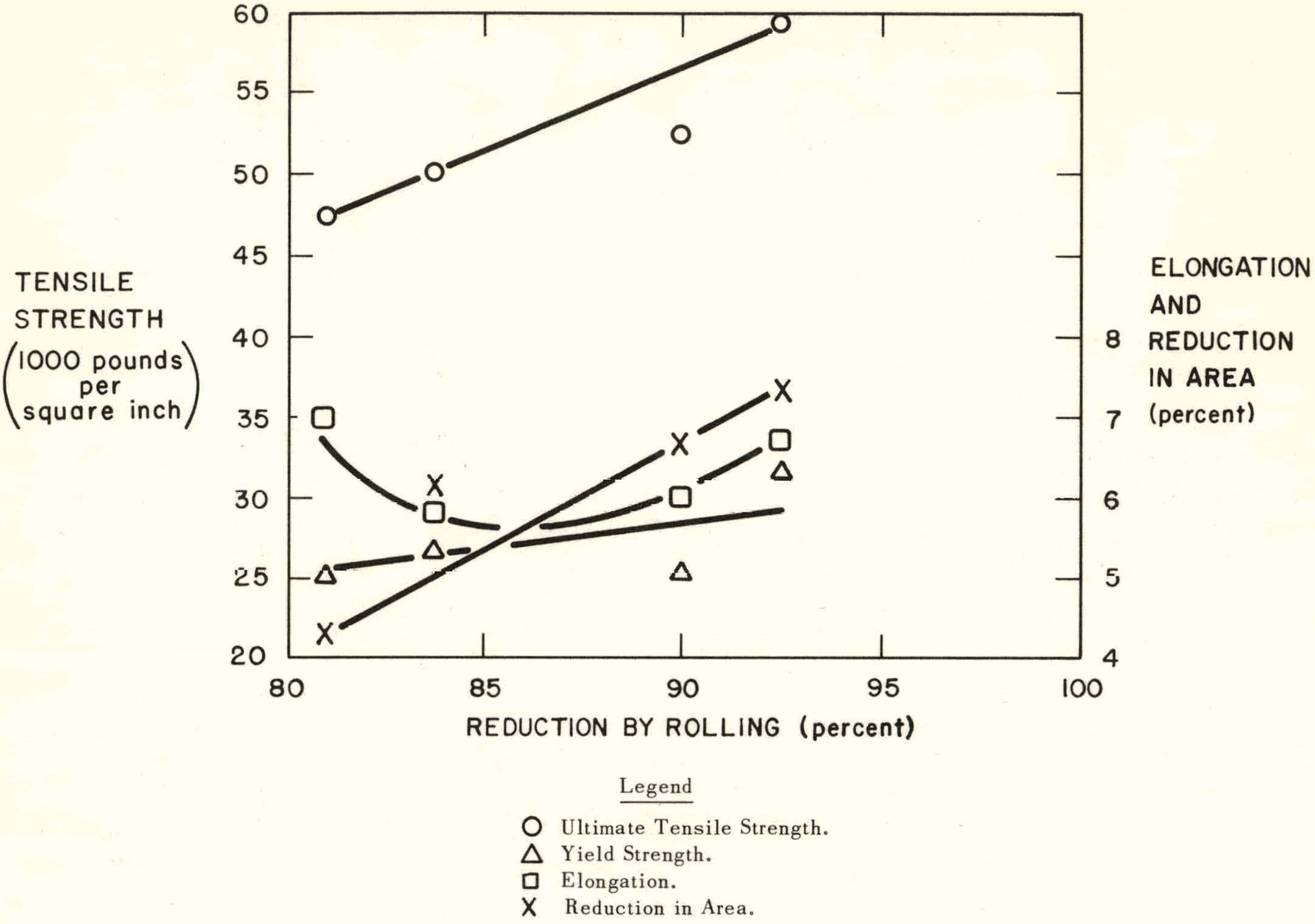

FIGURE 30. Room-temperature mechanical properties of beryllium bare-rolled to reductions indicated from 0.315-inch starting thickness. The material was cross-rolled, both when canned and bare.

TABLE IX. Data on ingot-sheet beryllium showing the effect of rolling direction on mechanical properties.

Sheet	Condition	Ultimate Tensile Strength (pounds per square inch)	Yield Strength (pounds per square inch)	Elongation (percent)
8-96-3	Can-rolled to 0.250 inches per Table II (Page 11).	33,000	28,000	1
8-96-3	Can-rolled to 0.250 inches per Table II and cross-rolled bare to 0.075 inches.	49,000	28,000	4
8-96-3	Can-rolled to 0.250 inches per Table II and unidirectional rolled-bare to 0.075 inches.[a]	67,000	55,000	2
8-126-A	Can-rolled to 0.250 inches per Table II and unidirectional rolled to 0.075 inches.[a]	43,500	38,200	1
8-126-A	Can-rolled to 0.250 inches per Table II and unidirectional rolled to 0.075 inches.[b]	55,100	43,100	2

---

[a] Tested transverse to the rolling direction.

[b] Tested parallel to the rolling direction.

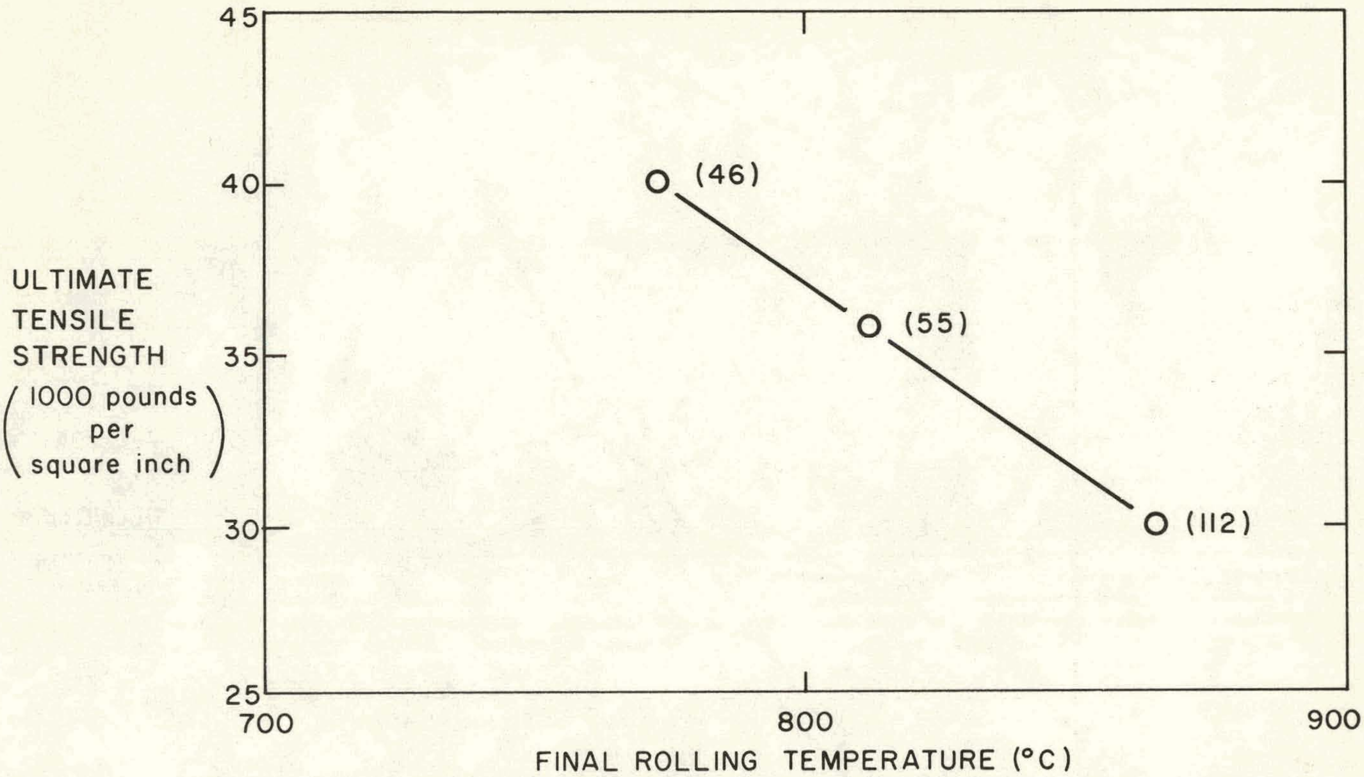

FIGURE 31. Plot of ultimate tensile strength versus final rolling temperature for ingot-sheet beryllium. Grain size in microns is indicated in parentheses. Data points result from at least two tests of material cross-rolled to the same total reduction. (The curve is not intended to suggest a linear relationship at temperatures beyond the extremes shown.)

same at 400°C. The yield strengths of both types are comparable. Elongation of the bare-rolled material reaches a maximum at about 200°C, whereas maximum elongation of the can-rolled does not occur until about 350°C. The reduction in area is superior in the bare-rolled material at all test temperatures.

The effect of chemistry on mechanical properties has not yet been determined. The observed effect of heat treatment on elevated temperature formability and ductility mentioned earlier indicates that this is an important area. Preliminary work reveals that:

a. Silicon contents of 1000 parts per million (ppm) improve room- and elevated-temperature ductility.

b. Copper contents of 1200 ppm improve formability.

c. Iron to aluminum ratios of 3 or greater prevent hot shortness during forming above 650°C.

3. Joint Strengths.

Ingot-sheet beryllium has been electron-beam welded at Rocky Flats using both the aluminum shim technique (11) and pure fusion. Some test data are contained in Table X. None of the specimens were etched prior to testing. This results in unusually low properties for the parent metal. Effectively, 100-percent joint strength was observed with ingot sheet. There was no porosity in the welds, as has been experienced with powder-metallurgy beryllium. The failures occurred in the weld-beryllium interface, not in the shim.

TABLE X. Ultimate tensile strength of ingot-sheet beryllium, electron-beam welded at Rocky Flats. All data results from unetched test specimens.

Specimen Thickness (inches)	Weld Thickness (inches)	Ultimate Weld (pounds per square inch)	Tensile Strength Parent Metal (pounds per square inch)	Joint Efficiency (percent)
0.025	none	39,000	38,000	100+
0.125	0.006	41,000	39,000	100+
0.250	0.012	35,000	36,000	97

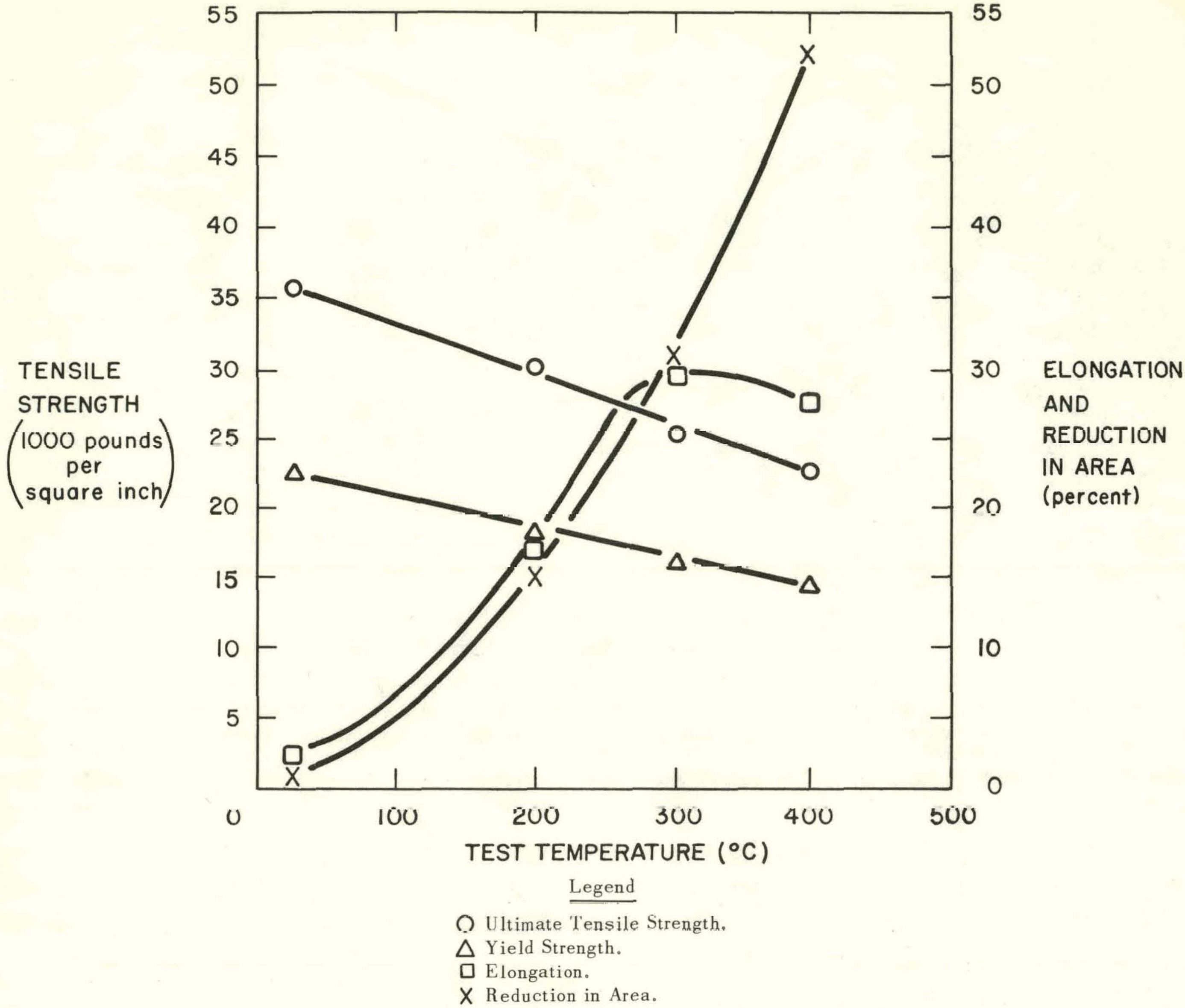

FIGURE 32. Plot of mechanical properties versus test temperature for Sheet 383-43, which was can-rolled to 0.250 inches with a finish-rolling temperature of 820°C. All points are the average of six tests.

CONCLUSIONS

1. Sound ingots, as large as 11 by 11 by 15.5 inches can be cast using the bottom-pouring technique and a 15-percent overcharge of scrap, powder-metallurgy feed.

2. Sound centrifugal castings, as large as 13-inch diameters by 13 inches long, can be made with wall thicknesses up to 0.375 inches. Cracking of the inside surface occurs with thicker walls, due to severe thermal gradients.

3. Sound sheet can be obtained by hot-rolling beryllium, canned in Type-304 stainless steel, to 85-percent total reduction in thickness. Reductions per pass of 10 to 15 percent at temperatures from 1020°C (initial breakdown) to 780°C (final passes) are used.

4. Ingot sheet can be bare-rolled (i.e., without a can) after 90-percent total reduction in a can. Sound, uniform sheets from 0.002 to 0.150 inches thick can be produced with a 20-microinch arithmetic average (AA) finish, using this technique.

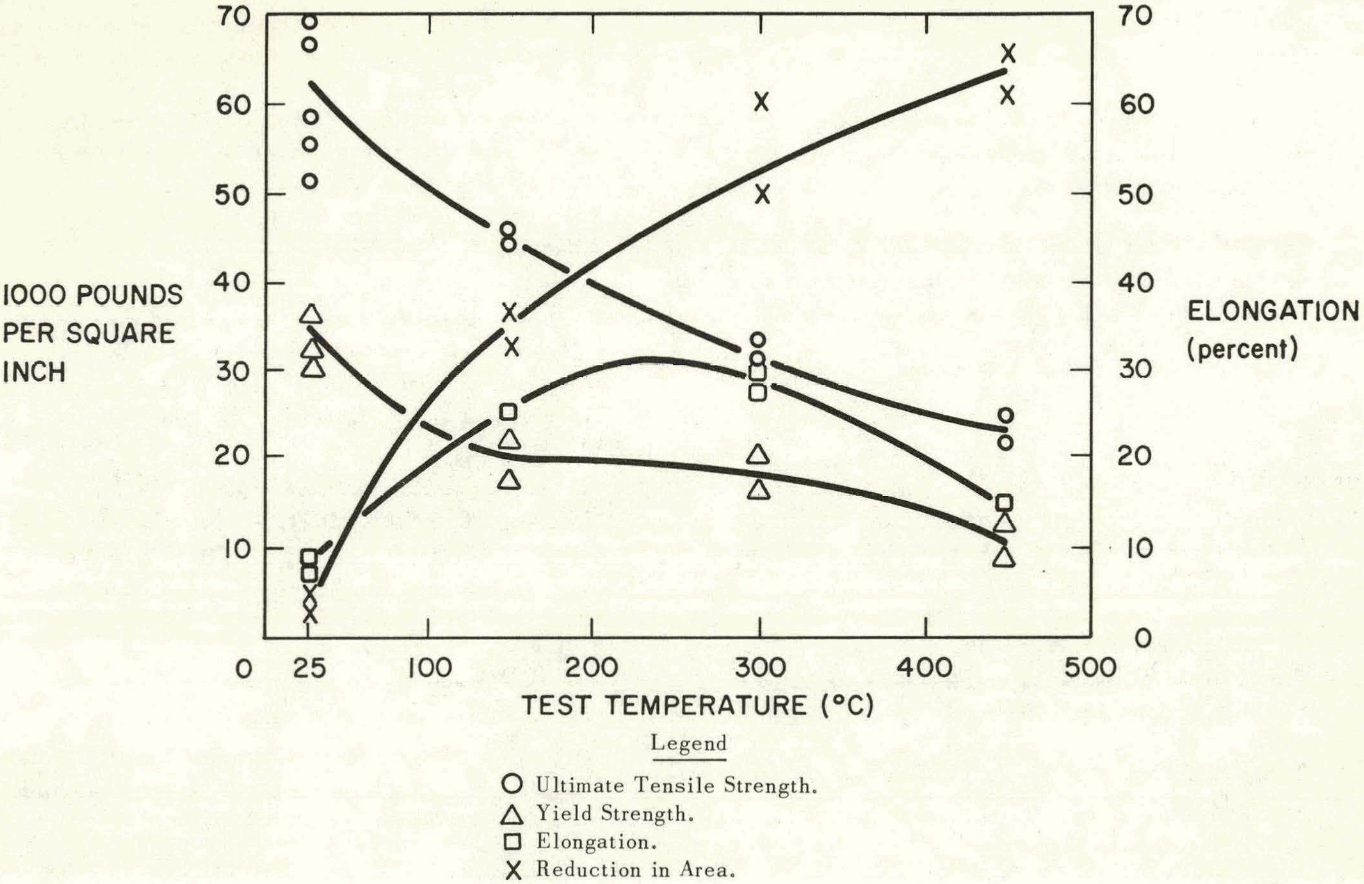

FIGURE 33. Tensile test data for ingot-sheet beryllium can-rolled from 3.5 inches to 0.250 inches and bare-rolled to 0.025 inches. Room temperature was at 25°C. (All tensile bars underwent a 20-hour heat-treat at 780°C after final rolling.)

5. Mechanical properties of the sheet are strongly dependent upon total reduction and amount of unidirectional rollings. Properties are also dependent upon finish-rolling temperature. Typical properties of 0.25-inch thick sheets, hot-rolled in a can to 92-percent reduction at a finish temperature of 780°C, are:

Ultimate Tensile Strength (pounds per square inch)	36,800
Yield Strength (pounds per square inch).	29,600
Elongation (percent)	3

6. The mechanical properties of ingot sheet containing 0.26-percent of beryllium oxide (BeO) are comparable to powder product containing 0.9 percent BeO, but slightly weaker than conventional powder product containing 2.0-percent BeO.

7. As-rolled ingot sheet can be deep-drawn into complex configurations at temperatures from 300°C to 780°C, depending upon stock thickness.

8. Bare-rolled ingot sheet can be roll-formed to simple geometries at temperatures from 25°C to 500°C, depending upon stock thickness.

9. Beryllium does not thin appreciably during deep drawing and the outer fibres do not thicken as much as most materials. Thickening can be determined from the equation where t_f = final thickness; t_i = initial thickness; D_f = final diameter; and D_i = initial diameter: $t_f = t_i (D_i/D_f)^{1/3}$.

10. Current experience indicates that nearly any configuration which can be formed from conventional materials, such as stainless steel, can be formed from beryllium at elevated temperatures. Indeed, some parts which can not be fabricated from

stainless steel can be made from beryllium. A wide variety of parts have been made.

11. It has been demonstrated that large scale reliable casting, rolling, and forming operations can be performed with beryllium.

Such evidence will undoubtedly have an effect on the cost of beryllium components. A reduction in costs should result in more widespread uses of beryllium in areas previously excluded.

REFERENCES

1. *Proceedings of The Institute of Metals.* London, England. October 1961.
2. G. E. Darwin and J. A. Buddery. *Beryllium.* Butterworths Scientific Publication, London, England. September 1959.
3. D. W. White and J. E. Burke. *The Metal Beryllium.* American Society for Metals, Cleveland, Ohio. 1955.
4. J. L. Frankeny. *Vacuum Induction Casting of Beryllium.* RFP-340. The Dow Chemical Company, Rocky Flats Division, Golden, Colorado. June 1964.
5. V. R. Friebel. "A Resistivity Study of Beryllium." RFP-841. Internal Communication. 1966.
6. A. Moore, *et al.* "Precipitation Aging and Improved Mechanical Properties in Commercially Pure Beryllium and Beryllium Alloys." Paper No. 4. *Proceedings of The Institute of Metals.* London, England. October 1961.
7. V. R. Friebel. *Metallography of Beryllium at Elevated Temperature.* RFP-544. The Dow Chemical Company, Rocky Flats Division, Golden, Golden, Colorado. November 22, 1965.
8. G. Sachs. *Sheet Metal Fabricating.* Reinhold Company, New York. 1951.
9. J. D. Lubahn and R. P. Felgar. *Plasticity and Creep of Metals.* John Wiley and Sons, New York. 1961.
10. V. R. Friebel and G. C. Campbell. *A Density Study of Beryllium.* RFP-679. The Dow Chemical Company, Rocky Flats Division, Golden, Colorado. January 21, 1966.
11. G. K. Hichen and W. B. Sample. "Joining Beryllium by an Electron-Beam Braze-Welding Technique." *Welding Journal,* 46:541S. December 1967.

APPENDIX A. Materials Data.

The specific information on materials and designs used is presented below for those concerned with the details of the work. The data are presented in the same order as the main body of the report.

1. Casting.

a. Crucible, mold-wash:

This is a water-base slurry of –325 mesh BeO and saturated solution of $BeSO_4$ as follows:

Beryllium Oxide (BeO)	42 grams
Beryllium Sulfate ($BeSO_4$)	15 grams
Distilled Water (H_2O)	43 grams

The above is blended by ball-milling for 100 hours.

b. The mold and crucible design for a rectangular ingot are shown in Figures 1-A and 2-A. The basic design is used for all geometries of static castings.

c. Graphite-material grades:

Crucibles, molds (either Great Lakes H4LM or National Carbon CS312).

Felt, WDF Grade, Union Carbide Corporation, Carbon Products Division, New York.

d. Stopper-rods:

Hycor TA505, aluminum oxide (Al_2O_3) rods from Coors Porcelain Company, Golden, Colorado.

e. Refractory:

Fire brick, K28 Type, Babcock and Wilson, Refractory Division, New York.

Castable, castable refractory from Norton Company, Worchester, Massachusetts.

2. Rolling.

a. A typical can design and rectangular-rolling billet are detailed in Figures 3-A through 6-A.

b. The wash coating used on the billets prior to canning contains:

Aluminum Oxide (Al_2O_3)	35 grams
Calcium Oxide (CaO)	15 grams
Distilled Water (H_2O)	50 grams

3. Forming.

a. The asbestos-sheet lubricant used is Type D-4106-85-41123, Grade 76807 from the General Electric Company, Insulating Materials Department, Schenectady, New York.

PROPERTIES OF MATERIALS.

1. The etches used at 120 to 160°F, prior to mechanical testing are:

Chromic Oxide (Cr_2O_3)	50 grams
Orthophosphoric Acid (H_3PO_4)	450 milliliters
Sulfuric Acid (H_2SO_4)	25 milliliters

2. Used at room temperature were:

Hydrofluoric Acid (HF) (concentrated)	2 milliliters
Nitric Acid (HNO_3) (concentrated)	45 milliliters
Distilled Water (H_2O)	53 milliliters

Only one of the etches is used and about 0.002 inches are removed from each surface.

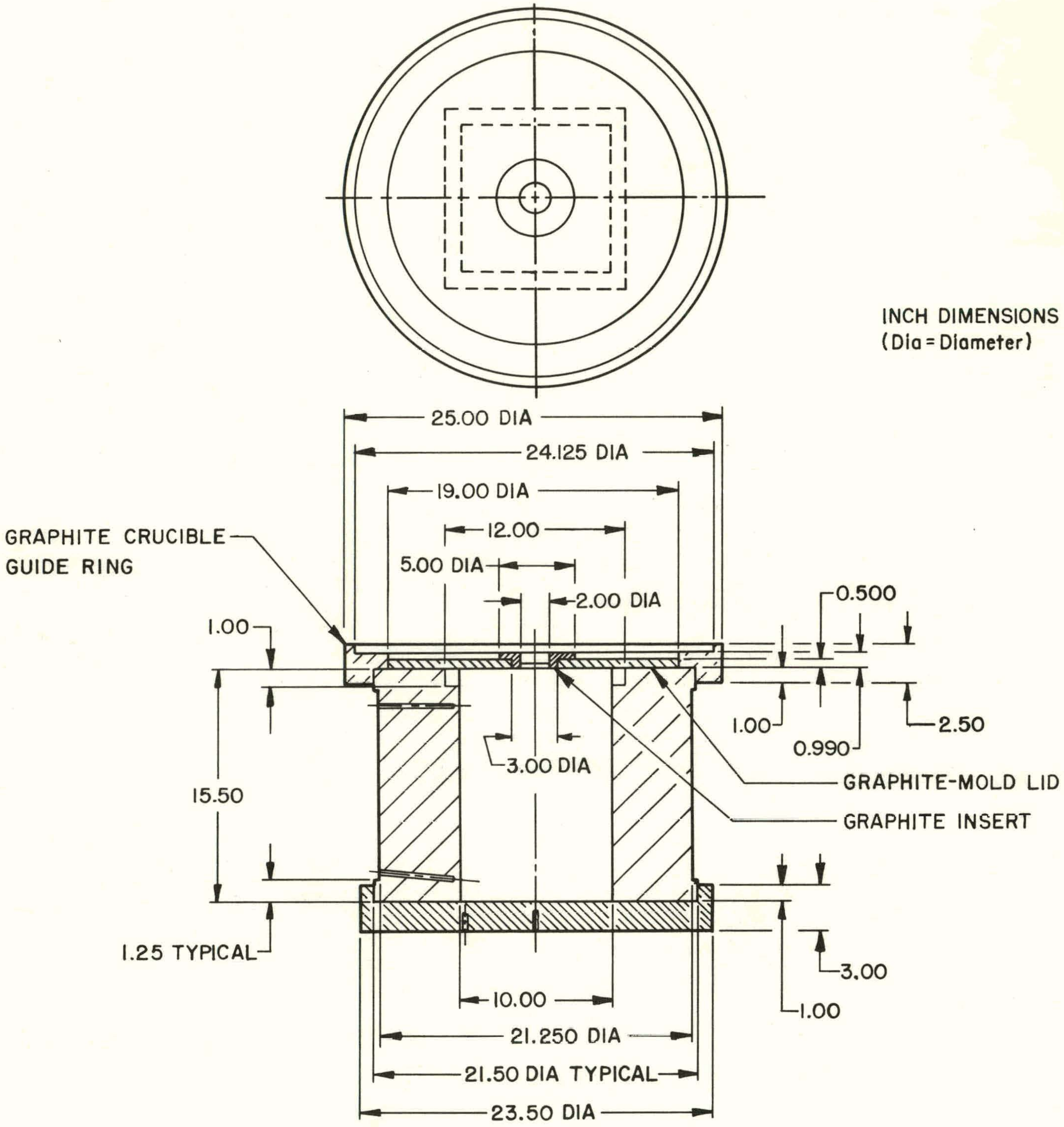

FIGURE 1-A. Large ingot-mold design used to cast 10- by 10- by 15.5-inch ingots, using the bottom-pouring technique.

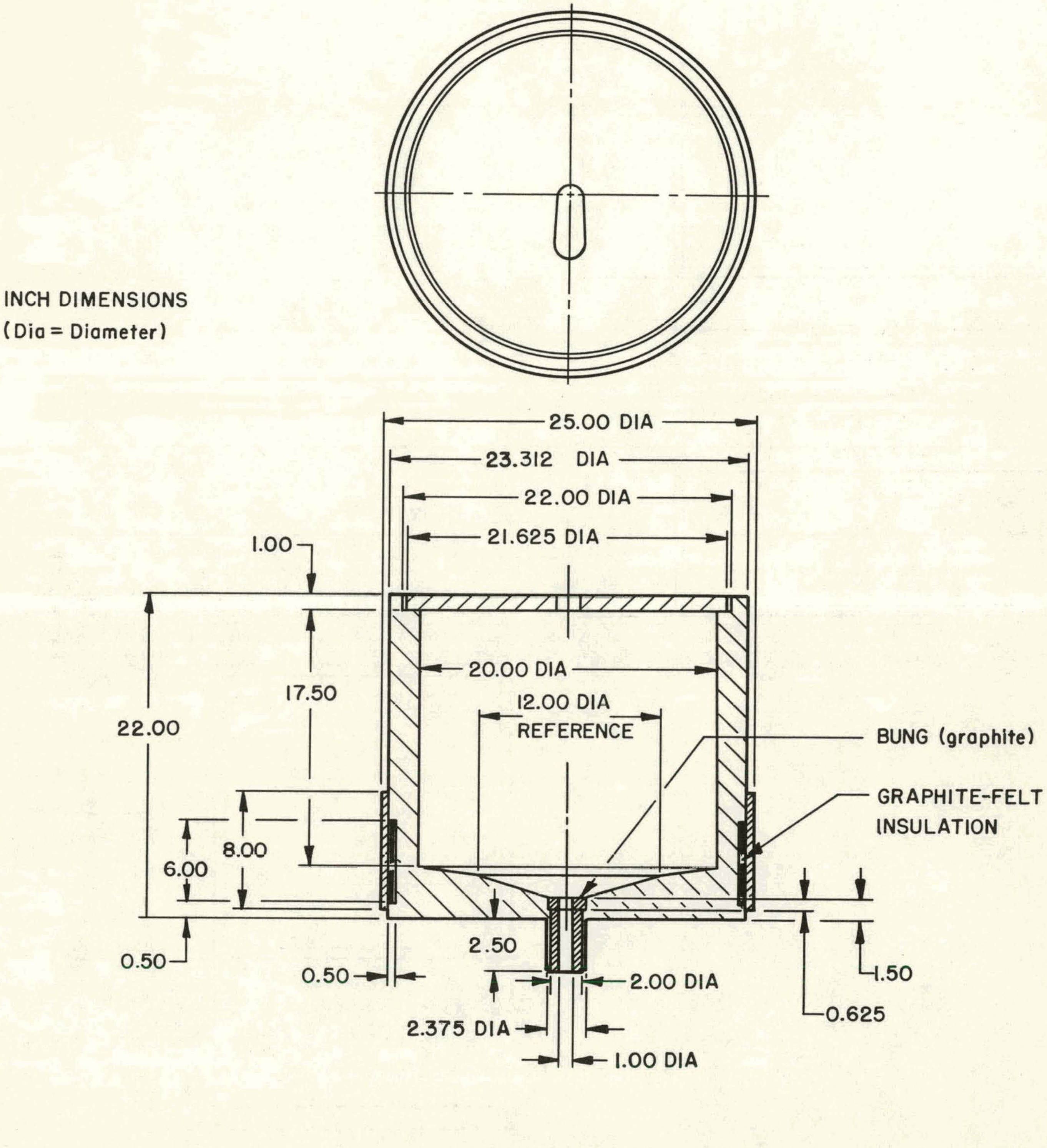

FIGURE 2-A. Large crucible design used to cast 10- by 10- by 15.5-inch ingots with bottom-pouring technique.

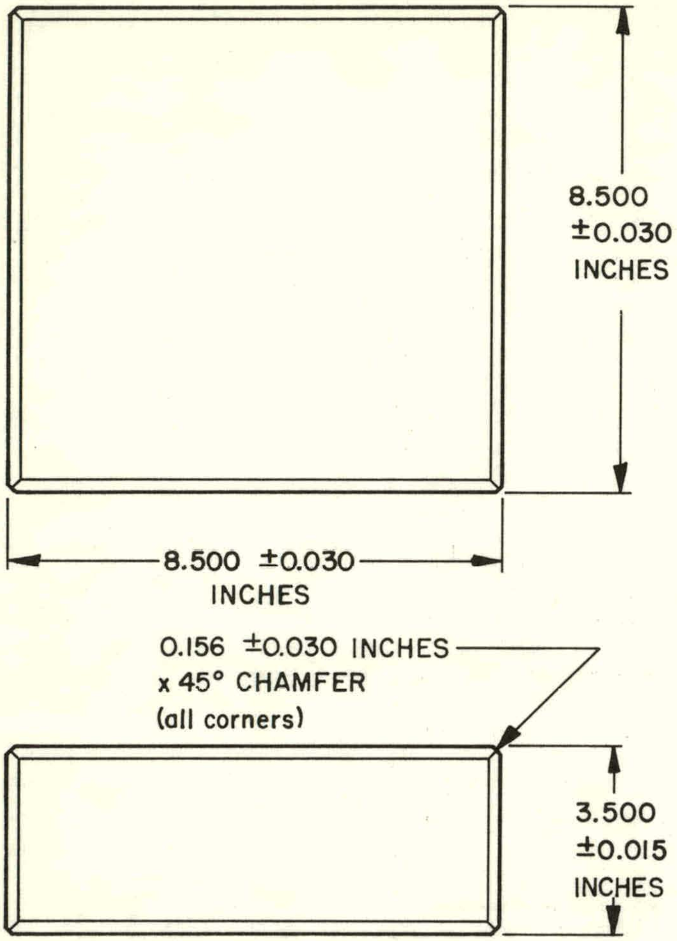

FIGURE 3-A. Typical cast and machined beryllium billet.

FIGURE 4-A. Lid design for typical rolling can of Type-304 stainless steel. Two are required per assembly.

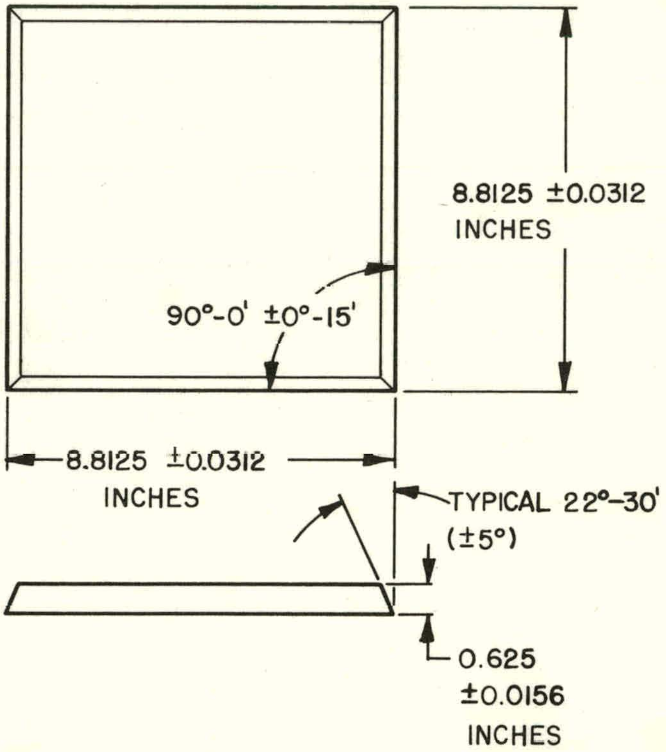

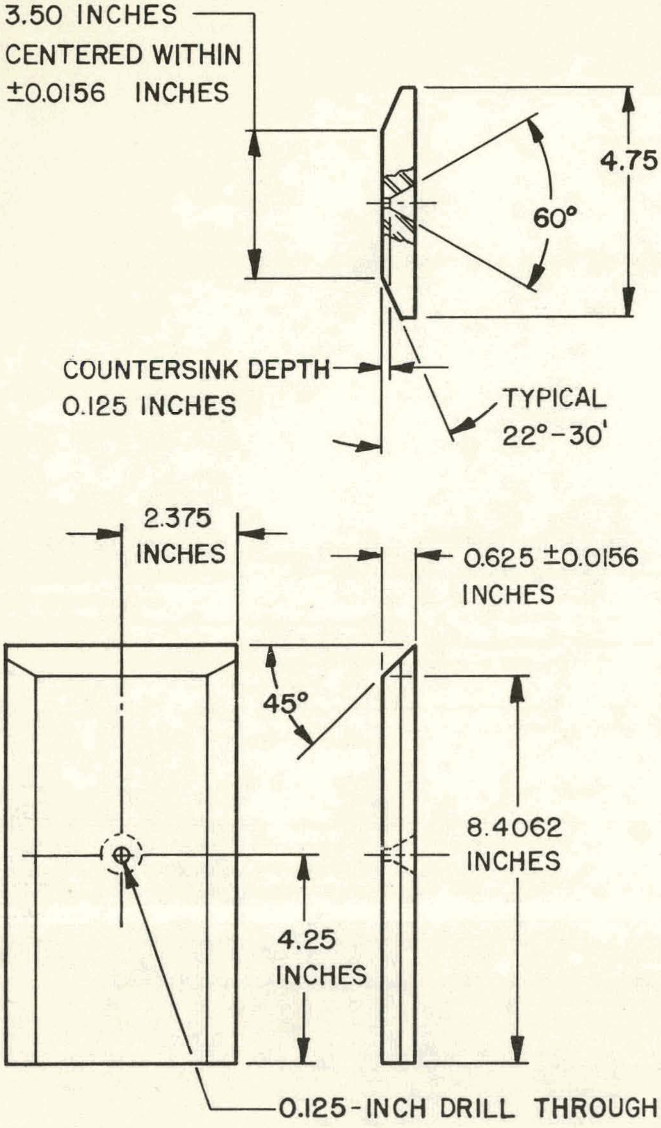

FIGURE 5-A. Side-rail design for typical can of Type-304 stainless steel. Only one of the four used per assembly has the vent hole. (Tolerances for diagram: Fraction, ±0.0312; Angle, +5°.)

FIGURE 6-A. Assembled beryllium billet in Type-304 stainless steel can. (Welds indicated by solid shadings.)