SSCL-656

SSCL-656
January 1994
Distribution Category: 414

R. D. Hutton

Design of a Synchrotron Radiation Detector for the Test Beam Lines at the Superconducting Super Collider Laboratory

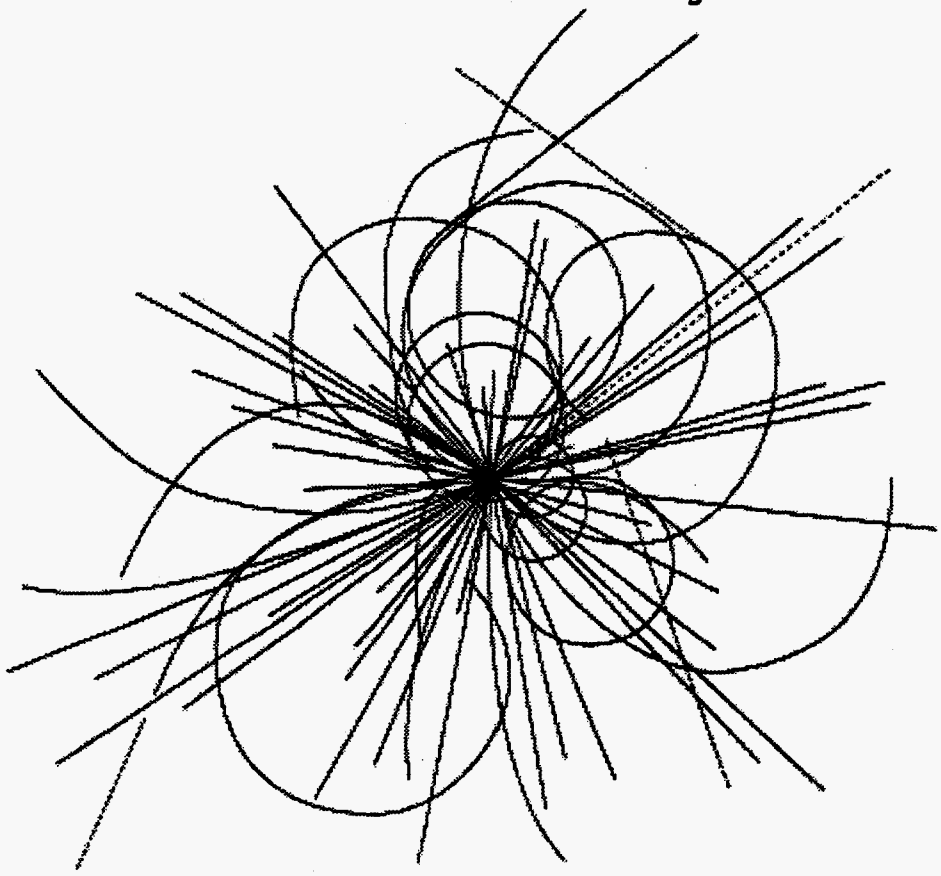

Superconducting Super Collider Laboratory

APPROVED FOR RELEASE OR PUBLICATION - O.R. PATENT GROUP
BY.....DATE.....

Disclaimer Notice

This report was prepared as an account of work sponsored by an agency of the United States Government. Neither the United States Government or any agency thereof, nor any of their employees, makes any warranty, express or implied, or assumes any legal liability or responsibility for the accuracy, completeness, or usefulness of any information, apparatus, product, or process disclosed, or represents that its use would not infringe privately owned rights. Reference herein to any specific commercial product, process, or service by trade name, trademark, manufacturer, or otherwise, does not necessarily constitute or imply its endorsement, recommendation, or favoring by the United States Government or any agency thereof. The views and opinions of authors expressed herein do not necessarily state or reflect those of the United States Government or any agency thereof.

Superconducting Super Collider Laboratory is an equal opportunity employer.

DISCLAIMER

Portions of this document may be illegible in electronic image products. Images are produced from the best available original document.

SSCL-656

Design of a Synchrotron Radiation Detector for the Test Beam Lines at the Superconducting Super Collider Laboratory

R. D. Hutton

Superconducting Super Collider Laboratory*
2550 Beckleymeade Ave.
Dallas, TX 75237

January 1994

*Operated by the Universities Research Association, Inc., for the U.S. Department of Energy under Contract No. DE-AC35-89ER40486.

DISTRIBUTION OF THIS DOCUMENT IS UNLIMITED

MASTER

1.0 INTRODUCTION

As part of the particle- and momentum-tagging instrumentation required for the test beam lines of the Superconducting Super Collider (SSC), the synchrotron radiation detector (SRD) was designed to provide electron tagging at momentum above 75 GeV. In a parallel effort to the three test beam lines at the SSC, schedule demands required testing and calibration operations to be initiated at Fermilab. Synchrotron radiation detectors also were to be installed in the MP and MW beam lines at Fermilab before the test beam lines at the SSC would become operational.

The SRD is the last instrument in a series of three used in the SSC test beam lines. It follows a 20-m drift section of beam tube downstream of the last silicon strip detector. A bending dipole just in front of the last silicon strip detector produces the synchrotron radiation that is detected in a 50-mm-square cross section NaI crystal. A secondary scintillator made of Bicron BC-400 plastic is used to discriminate whether it is synchrotron radiation or a stray particle that causes the triggering of the NaI crystal's photomultiplier tube (PMT).

2.0 DESIGN REQUIREMENTS

When the test beam spill is commenced from the Medium Energy Booster during the beam line operation, the beam profile is oval in shape, and has four sigma measurements of a vertical minor axis of 40 mm and a horizontal major axis of 76 mm. The bend angle of 7.6 mrad produces a spray of synchrotron light to be detected 20 m downstream of the bend center, as illustrated in Figure 1. The SRD must provide a clear aperture for this radiation and for the beam particles, and must be "tune-able" from a remote location to optimize the output of the scintillators. The SSC beam profile presented a larger aperture requirement than did either of Fermilab's MW or MP lines such that it became the limiting sizing factor.

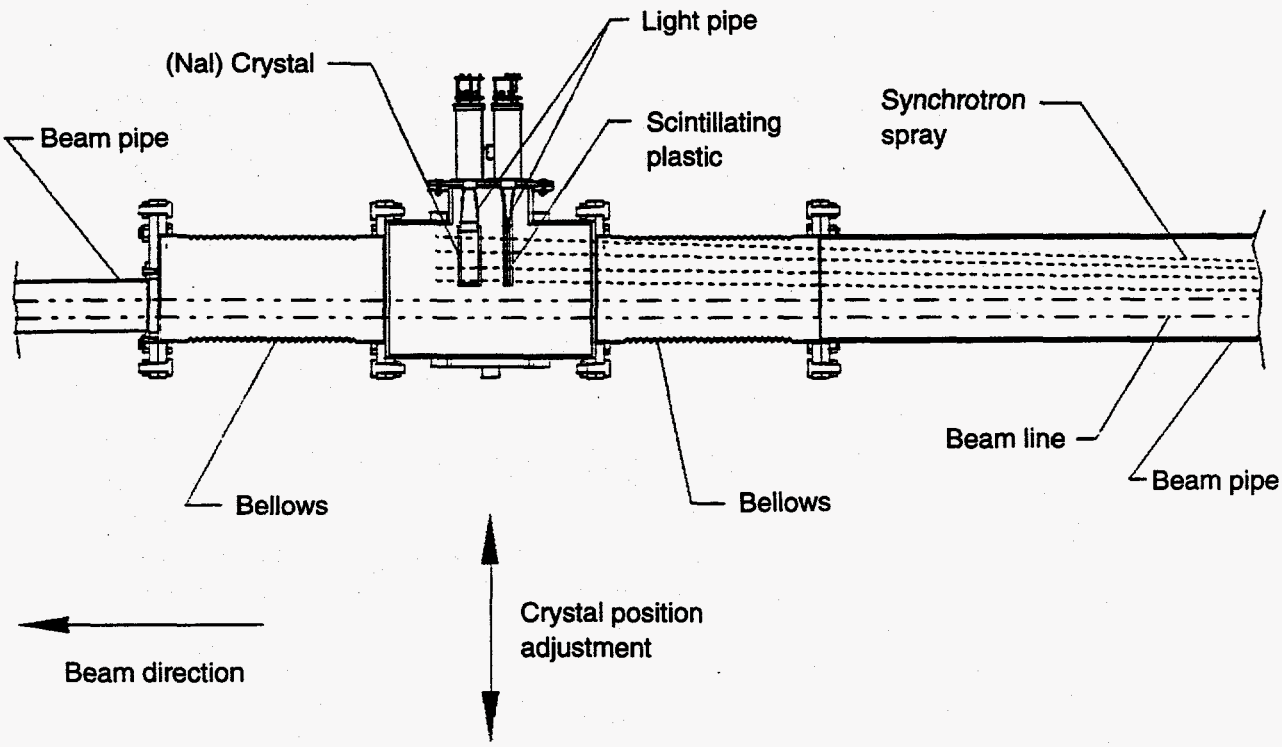

Figure 1. Synchrotron Radiation Detector (Side View).

An automated motion requirement of ±25-mm travel in the horizontal direction perpendicular to the beam was specified. This was to be controllable through common computer equipment and standard communications interfaces. To minimize vessel size and to prevent heating and voltage breakdown problems, the PMTs and their electronics were to be located outside the beam line vacuum. To maximize photon transmission and, therefore, signal, scintillators were to be in the vacuum. This required a vacuum-tight seal that also transmitted the scintillation light. A circumferential O-ring seal on the light pipe had to be developed and tested to ensure its functionality in this application.

Radiation exposure to the device is minimal due to the slow spill beam extraction used in the test beam operation. Therefore, O-ring seals could be used at all vacuum interfaces, and the expected 25-yr life of the device would not be adversely affected. A final requirement of the SRD was to have the design standardized so that it could be installed at either the SSC or Fermilab with little or no modification necessary.

3.0 DESIGN SOLUTION AND SPECIFICATIONS

3.1 Mechanical

The synchrotron radiation detector is shown in Figure 2, without its motion/alignment base and without a stand. The figure shows the enlarged beam pipe on the upstream side of the SRD, which allows clear aperture for the synchrotron radiation. The scintillators are shown in position, but their restraining clamps have been omitted for clarity. Two Phillips PMT bases (part number S563) are mounted on the T-section flange plate. The O-ring seal is at the point where the light pipe passes through the flange plate. Motion of the scintillators is effected by a global motion of the SRD body, which is mounted on linear bearings and is moved via a stepper motor-controlled lead screw. Compliance with the interfacing beam tubes is allowed by bellows on either end of the SRD body.

The body of the SRD was chosen to be 12-in., schedule 5S, 304 austenitic stainless steel pipe. This cross section yields a 316-mm internal diameter which, when allowing for tolerances and the motion requirements, leaves a clearance of approximately 15 mm per side from the beam and resulting synchrotron radiation. An 8-in., schedule 5S, 304 SS pipe is fit and welded to form the T-section. The cradle base of the SRD is welded to the main body and is also made from 304 stainless steel. Machining of thick interface pads on the bottom of the cradle base assures that the linear bearing blocks mate perpendicular to the centerline of the body and the T-flange, and are at the proper distance from centerline. Stainless steel was chosen for its weldability, cleanliness, resistance to corrosion, and cost savings due to its lack of required maintenance over its life requirement of 25+ yr.

The two photomultiplier bases are mounted to the T-section flange plate using an adapter flange. The adapter flange (dwg. no. R70-000013) has an M75 × 1.5 thread on its outer diameter onto which the PMT base can be threaded. A neoprene gasket provides a light seal against the face of the flange and is a standard application in the use of the base. The opposite side of the adapter flange provides the lip profile, which crushes the O-ring seal down around the round cross section of the light pipe. This seal profile was fully examined by the SSC Physics Research Division Vacuum Support Group. Calculations and test results are attached to this report. The T-section flange plate is aligned to the mating flange on the SRD body using a diamond and a round pin. The alignment pins allow the flange plate to be removed for service, transportation, or any number of reasons, and they allow the flange plate to be reinstalled without necessitating any subsequent alignment or tuning of the SRD.

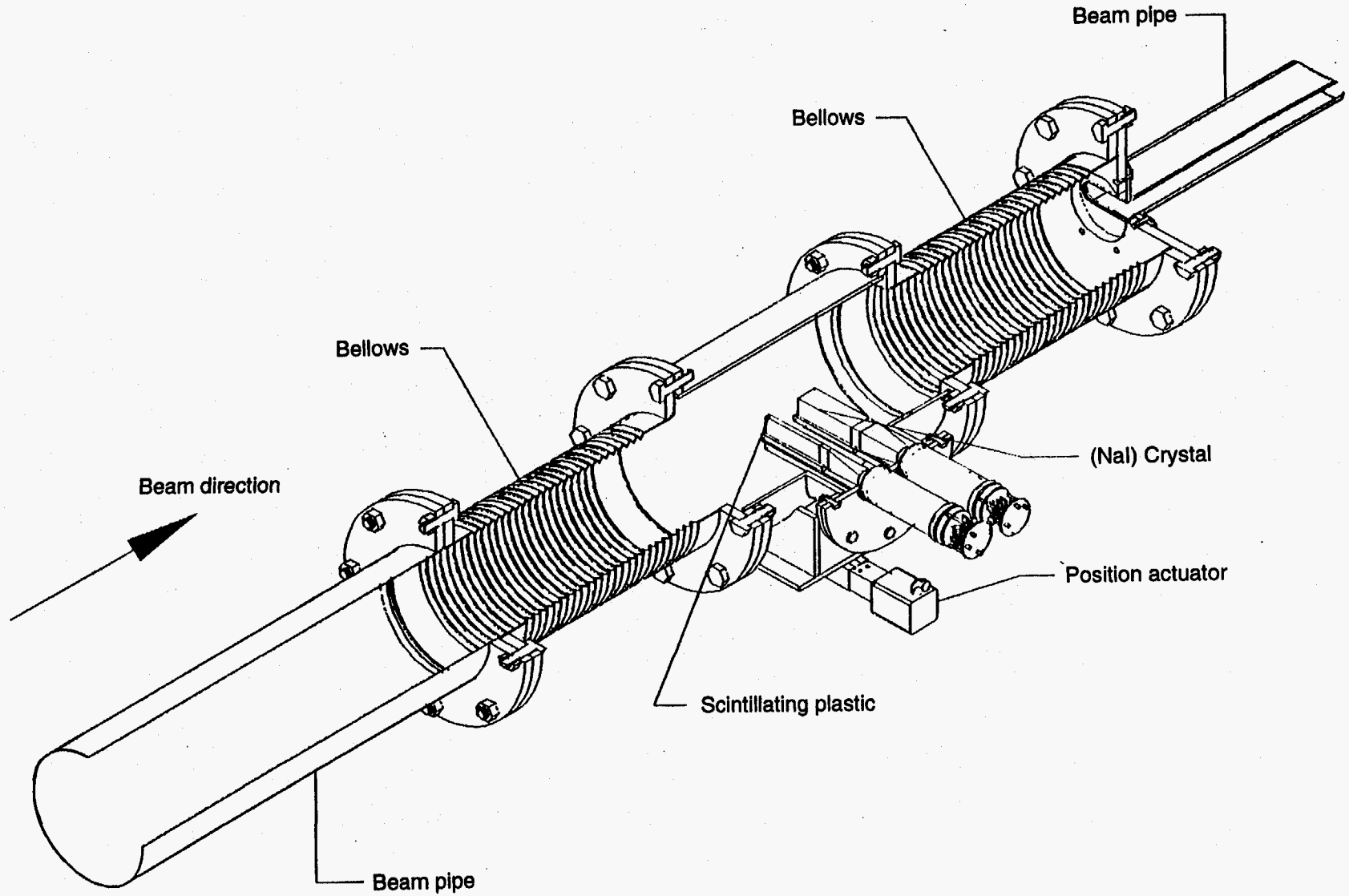

Figure 2. Synchrotron Radiation Detector (Cutaway View).

Registration of the scintillators is achieved through brackets attached to the T-section flange plate. Each aluminum bracket has a shallow groove machined down its length, just larger that the width of its scintillator. At the point where the bracket attaches to the flange plate is a ring clamp that secures the light pipe. When the assembly is made up, the light pipe is inserted through the hole in the plate, and the scintillator is positioned a calculated distance from the surface of the flange plate and is temporarily secured. An optical glue joint is made between the light pipe and scintillator, and the clamp is tightened. Once the glue has set, the entire clamp-scintillator-light pipe assembly can be wrapped with light shielding. The length of the circular cross section of the light pipe is not correct on the prints as shown. The required length will be determined by the PMT chosen.

The motion system consists of off-the-shelf components. The linear bearings are from the Thompson Industries, Inc., catalog. A double shaft system, 3/4-in. diameter, with super ball bushing bearing pillow blocks, was chosen (part number 1CB-12-HAO, 12-in. length). The linear actuator was chosen from Industrial Devices, Inc., which provides a turnkey system incorporating a Compumotor, Inc., stepper motor and controller with a lead screw actuator. The motor/actuator configuration, its mounting orientation, and the actuator end are specifiable from a number of options. The system chosen for the SRD is part number NH998A-2-MS6-FS2-PB-Q-ZH. This provides for a low profile actuator with an in-line motor with 2 in. of stroke on an 8 threads/in. acme screw that is mounted on its side with screws; it has a spherical joint rod end, a protective boot to keep contaminants out of the screw, and a quick-disconnect electrical connection, and it is equipped with an encoder and a home position sensor. The controller chosen was the H3951, which has encoder feedback capability and can communicate with a host computer through an RS232 serial interface. Appropriate pages from the vendor catalogs are attached.

The bellows were not bid, but design iterations were done with John Crane/Belfab, Inc. Primary design considerations were the minimization of axial beam line length used and minimization of the bellow's lateral spring rate to keep the load on the actuator within design limits. Two different size bellows are to be used, despite what is shown in Figure 2. Non-symmetrical vacuum loads are produced at the SRD because there is a large-diameter beam tube upstream and a small-diameter beam tube downstream. Rather than have facility people design load-carrying supports at each SRD installation, the SRD was designed to react to those loads itself and, therefore, to be innocuous to its interface connections. The flanges on the bellows are an ISO F-style (bolted) at the SRD connections, and an ISO K-style (clamped) at the beam tubes. This prevents difficulties with interface mismatch with hole locations in the tunnel installation. The drawings on the bellows and the SRD assembly drawing do not reflect the final design iterations. The final specifications on the bellows are listed in Table 1.

Table 1. Bellows for the SRD.

Design Parameter	Upstream End	Downstream End
Bellows type	Edge welded	Edge welded
Material, stainless steel	316L	316L
Internal diameter (in.)	12.60	6.625
Outer diameter (in.)	13.90	7.625
Material thickness (in.)	0.005	0.006
Number of plies	2	1
Number of convolutions	50	70
Free length (in.)	7.00	6.25
Lateral spring rate (ft lb/in.)	75.6	40
Axial spring rate (ft lb/in.)	14	18.6
Minimum lateral offset (in.)	± 1.0	± 1.0
Minimum axial offset (in.)	± 0.125	± 0.125
External pressure differential (psi)	15	15
Minimum required cycles	100	100

3.2 Vacuum Specifications

The vacuum level at the SRD was to be in the 10E-03 Torr range, resulting from the pumping of Roots blowers installed at WP 10. Some back-streaming of pump oil was likely, but was not expected to be a significant problem downstream. The leak-tightness requirement of the vessel is that achieved with the standard application of O-ring seals at each of the locations in the design. Tighter sealing systems were not required.

The O-ring seal around the light pipe was designed to be a "crush" seal, providing an approximately 95% fill of the gland volume. A Parker fluorocarbon compound, number V747-75, was chosen for its chemical inertness against Lexan polycarbonate and its lower permeability to helium compared to the other compounds tested against Lexan. The chemical inertness of the compound against acrylic light pipe material was tested, as was the ability to provide an acceptable seal. The seal design was successful for sealing vacuum, but there was some crazing of the light pipe from the O-ring compound. The test report is attached to this document.

Cleaning and leak check specifications were taken from Accelerator Division documents: Vacuum Leak Test, No. AMA-3210088, and Cleaning Vacuum Components, No. AMA-3210086. These process specifications were to be used in their entirety.

Two vacuum access ports are provided on the body of the SRD. These can be used for a variety of purposes. Vacuum pump-down in the lab during system check-out and vacuum monitoring in the tunnel installation were the main uses foreseen.

3.3 Safety Specifications

A major function of the SRD is containment of beam line vacuum. Due to the implosive nature of large vacuum volumes, safety codes exist to govern the design of vacuum vessels. Fermilab's codes were in place and were centered around the Compressed Gas Association's Standard for Insulated Cargo Tank Specification for Cryogenic Liquids, number CGA-341-1987. Within that standard is a section that covers the outer vacuum shell of a cargo tank; the SRD's physical parameters easily met those guidelines. Even with this standard satisfied, the Fermilab safety code number 5033 eliminated any special requirements other than sound engineering design, because the vessel volume was well below the 35-ft^3 threshold set forth in 5033. Copies of both of these items are attached.

The safety code for vacuum vessels at the SSC had not been developed at the time the SRD was designed and was to be produced. Meetings with Laboratory safety officers yielded the decision to design the vessel according to the practices of the ASME Boiler and Pressure Vessel Code, Section VIII, Division 1. Adherence to the code was to stop short of having ASME-approved inspectors witness and certify the fabrication of the vessel, but all other documentation was to be preserved. Code calculations performed by the Physics Research Division's Analysis Group are attached to this document.

3.4 Electrical Specifications

Electrical requirements were the least developed of all the design issues. PMT high-voltage and signal connections are very commonplace and did not need special attention. Standard high-voltage power supplies and data acquisition modules are required for the PMTs. Any vacuum-monitoring transducer connections would need to be provided for.

The stepper motor is the only other electrical device associated with the SRD. The motor controller is the point for power input, which is required to be 95–132 VAC @ 50/60 Hz; 5 A max, 10 A peak. The controller connects directly to the motor and encoder via a quick disconnect cable approximately 12 ft in length. The motor runs on direct current, and there are some maximum cable length considerations for it and the encoder. An RS232 serial communication line to the controller also needs to be provided.

3.5 Interface Specifications

As noted in Section 3.2, the beam pipe connections require a standard ISO K-style flange attached to the existing ends. No clocking or bolt hole requirement exists for the flanges; only the ISO sizes need be correct. Axial beam line clearance has not been specified due to the uncertainty of the bellows manufacturer and, therefore, the ultimate bellows length. Electrical interfaces are discussed in Section 3.4.

Alignment of the SRD remains the final design issue. At the SSC, the alignment group preferred the use of spherically mounted targets as a standard equipment specification. Four spherical cups were to be mounted to the body of the SRD, two on either side body of the SRD at 45° from vertical, with as much axial distance between them as possible. The drawings show an earlier concept with the cups mounted on the T-section flange plate, but the body location affords installation and alignment without the sensitive components needing to be in place.

The alignment plate had yet to be sent through the alignment group for approval, but the design is similar to another installation at the SSC. It uses bronze jack bolts at six locations, three of which are used to set height and tilt in two axes. The three screws are used exactly as any other three-point system would be, and the other three bolts are for added stiffness once the three primary bolts are secured. Slots in the jack bolt mounting plates allow for movement transversely to the beam line and also permit some rotation about the vertical axis. Adjustment in the axial direction, parallel to the beam line, was not considered critical, and initial survey placement of the device is sufficient. The stand design shown in drawing number R70-000029 is generic and can differ in height depending on final installation requirements.

ACKNOWLEDGMENTS

The success of this device is due to the combined insight and experience of several persons. Howard Fenker provided the design requirements and project motivation. Ken Schlindwein provided hard knocks design applications experience and maintained the schedules. Kelley Bramble was responsible for the design details and drawings, and Sanyi Zheng for the vacuum calculations and testing. Electrical support was provided by Tom Regan, and vacuum test pieces were manufactured by the Physics Research Division shop personnel.

ATTACHMENTS

CGA-341 — 1987

STANDARD FOR INSULATED CARGO TANK SPECIFICATION FOR CRYOGENIC LIQUIDS

COMPRESSED GAS ASSOCIATION, INC.

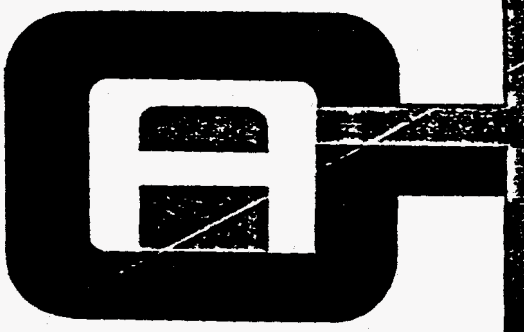

DEPT

TP761
.C65
C341
c.3

APR 2 8 1993
ORDER NO: 13852
US GOV'T PROPERTY

PLEASE NOTE:

The information contained in this document was obtained from sources believed to be reliable and is based on technical information and experience currently available from members of the Compressed Gas Association, Inc. and others. However, the Association or its members, jointly or severally, make no guarantee of the results and assume no liability or responsibility in connection with the information or suggestions herein contained. Moreover, it should not be assumed that every acceptable commodity grade, test or safety procedure or method, precaution, equipment or device is contained within, or that abnormal or unusual circumstances may not warrant or suggest further requirements or additional procedure.

This document is subject to periodic review and users are cautioned to obtain the latest edition. Comments and suggestions are invited from all users for consideration by the Association in connection with such review; any such comments or suggestions will be fully reviewed by the Association after giving the party, upon request, a reasonable opportunity to be heard.

This document should not be confused with federal, state, provincial, or municipal specifications or regulations, insurance requirements or national safety codes. While the Association recommends reference to or use of this document by government agencies and others, this document is purely voluntary and not binding.

THIRD EDITION: 1987
COPYRIGHT © 1987 BY THE COMPRESSED GAS ASSOCIATION, INC.
1235 JEFFERSON DAVIS HIGHWAY, ARLINGTON, VA. 22202
Printed in U.S.A.

CONTENTS

Page

1. INTRODUCTION 4
2. DEFINITIONS 4
3. GENERAL REQUIREMENTS 5
   - 3.1 CGA Design Pressure and Design Service Temperature 5
   - 3.2 Regulations 5
   - 3.3 Liquid Container 5
   - 3.4 Inner Support System 5
   - 3.5 Insulation 5
   - 3.6 Outer Shell 5
4. MATERIALS 7
   - 4.1 Liquid Container 7
   - 4.2 Other Components 8
   - 4.3 Cleaning 8
5. JOINTS 8
   - 5.1 General 8
   - 5.2 Welding 8
   - 5.3 Location 8
   - 5.4 Attachments 8
6. PIPING AND CONTROLS 8
   - 6.1 Manholes 8
   - 6.2 Outlets 8
   - 6.3 Discharge Control 8
   - 6.4 Pressure Relief Devices 8
   - 6.5 Piping, Valves, and Fittings 8
7. PROTECTION OF PIPING, VALVES, AND FITTINGS 9
   - 7.1 General 9
   - 7.2 Mid-Tank Housing 9
   - 7.3 Protective Housing 9
   - 7.4 Rear Bumper 9
8. SUPPORTS AND ANCHORING 9
   - 8.1 Cargo Tank with Frame 9
   - 8.2 Frameless Cargo Tank 9
9. GAUGING DEVICES 10
   - 9.1 Level Gauging Devices 10
   - 9.2 Pressure Gauges 10
   - 9.3 Vacuum Gauges 10
10. PUMPS 10
11. TESTING 10
    - 11.1 General 10
    - 11.2 Piping and Appurtenances 10
12. MARKING OF TANKS 10
    - 12.1 Code and Name Plate 10
13. CERTIFICATION 11
    - 13.1 General 11
    - 13.2 Retention 11
14. REFERENCES 11

LIST OF ILLUSTRATIONS

Tables

1. Minimum Metal Thickness of Outer Shell 5
2. Maximum Portion of Outer Shell to be Used in Computing Ring Section Modulus 7

COMPRESSED GAS ASSOCIATION SPECIFICATION CGA-341
INSULATED CARGO TANK FOR CRYOGENIC LIQUIDS

1. INTRODUCTION

1.1 This cargo tank specification contains the suggested minimum guidelines for insulated cargo tanks intended for transportation of cryogenic liquids at pressures below 25.3 psig (174.3 kPa) in the highway mode and, in the United States, not covered by Hazardous Materials Specification MC-338 of the U.S. Department of Transportation (DOT) and other applicable sections of Title 49 of the U.S. *Code of Federal Regulations.* [1][1] In Canada, specification requirements for cargo tanks for refrigerated (cryogenic) liquids are promulgated by Transport Canada in the *Transportation of Dangerous Goods Regulations.* [2]

1.2 Specification CGA-341 provides a cargo tank with very efficient insulation and relatively low heat leak to the lading. It resembles an oversized thermos bottle in that the liquid container is supported in an approximately concentric manner within the outer shell, with insulation in the annular space. Thus, the outer shell is often the primary structural member anchored to the truck bed, or the tandem—fifth wheel of a cargo tank.

1.3 Specification CGA-341 cargo tanks are considered suitable for the transportation of liquid argon, helium, nitrogen, oxygen, and nonflammable cryogens.

2. DEFINITIONS

2.1 For the purpose of this standard the following terms are defined:

2.1.1 ASME Code. As used in this standard, ASME Code refers to the latest edition and addenda in effect at the date of manufacture of Section VIII, Division 1, "Pressure Vessels," of the *ASME Boiler and Pressure Vessel Code* of the American Society of Mechanical Engineers. [3]

2.1.2 Cargo Tank. The assembled liquid container, insulation, support system and outer shell permanently mounted on or forming part of a road vehicle.

2.1.3 CGA Design Pressure. As used in this specification, CGA design pressure is identical to the term "maximum allowable working pressure" as used in the ASME Code. It is the maximum gauge pressure at the top of the liquid container in its operating position and should not be less than 25.3 psig (174.3 kPa). To determine the minimum permissible thickness of the different parts of the liquid container, the static head of the lading shall be added to the CGA design pressure. If vacuum insulation is used, the liquid container must be designed for a pressure of 14.7 psia (101.4 kPa) more than the CGA design pressure plus the static head of the lading.

2.1.4 Cryogenic Liquid. A liquefied gas having a boiling point colder than -130°F (-90°C) at 14.7 psia (101.4 kPa).

2.1.5 Design Service Temperature. This is identical to the minimum allowable temperature for which the liquid container is suitable as defined in paragraph UG-116 of the ASME Code. [3] The design service temperature must be -320°F (-196°C); for liquid helium, the design service temperature must be -452°F (-269°C).

2.1.6 Design Weight of Lading. The weight of the lading used in the design calculations for the liquid container, inner support system, outer shell, anchorage, etc. As a minimum, it must equal the actual weight of lading to be put in the cargo tank, but it may exceed this so that the cargo tank will be suitable for heavier ladings.

2.1.7 Insulation. A material of low thermal conductivity, surrounding the liquid container, which reduces the flow of heat to the liquid container. This insulation may or may not be evacuated.

2.1.8 Lading. The cryogenic liquid being transported in the liquid container.

2.1.9 Liquid Container. The inner tank (pressure vessel) which actually contacts and holds the lading.

2.1.10 Outer Shell. The outer metal housing around the insulation. This housing protects the insulation from moisture. It is often the primary structural member which serves as the frame of the cargo tank or is anchored to the frame of a truck.

2.1.11 Pressure Relief Device. A device intended to prevent rupture of a container, such as a liquid container or outer shell under certain conditions of exposure.

2.1.12 Ultimate Strength. The term ultimate strength has to do with the maximum stress a material can develop. This incorporates an account-

NOTE: References in this document are indicated by bracketed numbers and are listed in the order of appearance. See Section 14, References.

ing of tensile, compressive, and torsional stress into one word. Ultimate strengths are usually stated in terms of the kind of stress producing the failure. Minimum ultimate means the minimum value of a range of ultimate strengths as determined by measurements.

3. GENERAL REQUIREMENTS

3.1 CGA Design Pressure and Design Service Temperature. See Section 2, Definitions.

3.2 Regulations

3.2.1 The cargo tank and its lading are subject to the following applicable regulations:

3.2.1.1 In the United States, Title 49 of the *Code of Federal Regulations*, (Transportation). [1]

3.2.1.2 In Canada, the *Transportation of Dangerous Goods Regulations* of Transport Canada as well as the Pressure Vessels Act and Regulations of the Provinces in which the cargo tank is used. [2]

3.3 Liquid Container

3.3.1 The liquid (pressure) container must be of welded construction and be designed, constructed, and stamped in accordance with and fulfill the requirements of the ASME Code. [3]

3.3.2 Local primary membrane stresses in the shell at the inner support system must be in accordance with UG-54 of the ASME Code, Section VIII, Division 1. [3] The weight of the liquid container itself, the design weight of lading, and the articles supported by the liquid container must be considered using the forces as described in 3.4.1. The allowable stress value for the combined primary membrane stress and local primary membrane stress* shall not exceed 1.25 times the maximum allowable stress value as prescribed by the ASME Code, Section VIII, Division 1, at a temperature of 100°F (38°C). [3]

*NOTE: Refer to Appendix 4 of the ASME Code, Section VIII, Division 2, for definitions.

3.3.3 Design details that permit the collection and retention of cleaning materials or contaminants should be avoided. Designs that permit the flushing of all surfaces by the normal sloshing of the cryogenic liquid are preferred.

3.4 Inner Support System

3.4.1 The liquid container must be supported within the outer shell by members designed to withstand minimum static loadings of:

(a) vertical downward of 2.0
(b) vertical upward of 1.5
(c) longitudinal of 1.5
(d) lateral of 1.5

times the weight of the liquid container and attachments when filled to the design weight of lading using a safety factor of not less than four (4) based on the room temperature minimum ultimate strength of the material used.

3.4.2 The design weight of lading used in determining the loadings in 3.3.1 and 3.4.1 must be shown on the markings required by 12.1 and on the report required by 13.1.

3.5 Insulation. The surface of the liquid container must be insulated. Insulating material must not be subject to corrosive attack by the expected contents of the tank. Insulating material for cargo tanks for oxygen service must not sustain combustion when contacted with a glowing platinum wire in a 99.5 percent oxygen atmosphere at atmospheric pressure. Containers so insulated shall be marked with the words: INSULATION FOR OXYGEN, in accordance with Section 12, and all other containers marked with the words: INSULATION NOT FOR OXYGEN.

3.6 Outer Shell

3.6.1 The insulation must be completely covered with a metal shell constructed and sealed so that moisture cannot come in contact with the insula-

TABLE 1

MINIMUM METAL THICKNESS OF OUTER SHELL

Metal	Evacuated	Not Evacuated
Carbon Steel	0.0946 inch (2.40 mm)	0.0677 inch (1.72 mm)
Stainless Steel	0.0428 inch (1.09 mm)	0.0269 inch (0.68 mm)
Aluminum	0.125 inch (3.18 mm)	0.100 inch (2.54 mm)

tion. Minimum metal thicknesses are shown in Table 1.

3.6.2 If a vacuum is maintained in the insulation space, the outer shell must be designed for a minimum collapsing pressure of 30 psi (206.8 kPa) differential. This is the equivalent of a 15 psi (103.4 kPa) differential with a safety factor of 2.

3.6.2.1 The cylindrical portion of the outer shell between stiffening rings must have a critical collapsing pressure of at least 30 psi (206.8 kPa) as determined by the formula:

$$P_c = 2.6E\,(t/D)^{2.5}/[(L/D)-.45(t/D)^{.5}]$$

Where:

P_c = Critical collapsing pressure, in psi;

E = Modulus of elasticity of outer shell material, in psi;

t = Thickness of outer shell material, in inches;

D = Outside diameter of outer shell, in inches; and

L = Distance between stiffening ring centers, in inches. The heads are considered as stiffening rings located one-third of the head depth from the head tangent line.

3.6.2.2 If stiffening rings are used in designing the cylindrical portion of the outer shell for external pressure, each ring must be attached to the outer shell by fillet welds. Outside stiffening ring attachment welds must be continuous. Inside ring attachment welds may be intermittent.

Where intermittent welds are used, the total length of welds on each side of the ring must be at least one-third of the outer shell circumference or, if welded on one side, two-thirds of the outer shell circumference. The maximum spacing between intermittent welds attaching internal rings shall not exceed twelve times the thickness of the shell to which they are attached.

A portion of the outer shell may be included when calculating the moment of inertia of the ring. The effective width of outer shell plate, W, on each side of the attachment to the ring is given by the formula:

$$W = 0.78(Rt)^{0.5}$$

Where:

R = Outside radius of the outer shell, in inches, and

t = Thickness of the outer shell material in inches

3.6.2.3 Where a stiffening ring consists of a closed section having two webs attached to the outer shell, the outer shell plate between the webs shall be included up to the limit of twice the value of W as defined above. The flange of the section, if not a standard structural shape, is subject to the same limitation, with W based on R and t of the outer shell. Where two separate members, such as two angles, are located less than 2W apart, they shall be treated as a single stiffening ring (the maximum width of outer shell plate which shall be considered effective is 4W). The closed section between an external ring and the outer shell must be provided with a drain opening.

3.6.2.4 Each stiffening ring must have a minimum moment of inertia as determined by either of the following formulae:

$$I = 1.05D^3L/E$$

or

$$I' = 1.38D^3L/E$$

Where:

I = Required moment of inertia of the stiffener itself about a centroidal axis parallel to the outer shell axis, in inches to the fourth power;

I' = Required moment of inertia of the combined section of stiffener and effective width of outer shell plate about a centroidal axis parallel to the outer shell axis, in inches to the fourth power;

D = Outside diameter of the outer shell, in inches;

L = One-half the distance from the centerline of the stiffening ring to the next line of support on one side, plus one-half the distance from the centerline of the stiffening ring to the next line of support on the other side of the stiffening ring, both measured parallel to the axis of the outer shell,* in inches;

*NOTE: A line of support is either a stiffening ring meeting the requirements of this paragraph or a circumferential line on a head at one-third the depth of the head from the tangent line.

E = Modulus of elasticity of the stiffener material in psi.

3.6.2.5 The outer shell heads on vacuum-insulated cargo tanks must be sufficiently thick to sustain a critical collapsing pressure of at least

30 psi (206.8 kPa) as determined by the following formula:

$$P_c = 0.25E\ (t/R)^2$$

Where:

P_c = Critical collapsing pressure, in psi (30 psi minimum);

E = Modulus of elasticity of head material, in psi;

t = Thickness of head material after forming, in inches; and

R = Inside dish radius of head, in inches. For ellipsoidal heads, $R = K_1 D_o$, where K_1 is established from Table UG-37 in the ASME Code [3], and D_o is the outside diameter of head.

3.6.3 When used as the primary structural member, a nonevacuated outer shell must have circumferential reinforcement as prescribed below:

3.6.3.1 Ring stiffeners, heads, and bulkheads must be located in such a manner that the maximum unreinforced portion of the outer shell is not more than 60 inches (152.4 cm).

3.6.3.2 Ring stiffeners, when used to comply with this section, must be continuous around the circumference of the outer shell, and must have a section modulus about the neutral axis of the ring section parallel to the outer shell at least equal to that determined by the following formula:

$$\frac{I}{C}\ (\text{Min}) = 0.00027\ DL \quad \text{for Steel}$$

$$\frac{I}{C}\ (\text{Min}) = 0.000467\ DL \quad \text{for Aluminum Alloy}$$

Where:

$\frac{I}{C}$ = Section modulus, in $(\text{inches})^3$;

D = Outer shell diameter, in inches

L = Ring spacing (inches); i.e., the maximum distance from the midpoint of the unsupported outer shell on one side of the ring stiffener to the midpoint of the unsupported outer shell on the opposite side of the ring stiffener.

If a ring stiffener is welded to the outer shell (with each circumferential weld not less than 50% of the total circumference of the vessel and the maximum unwelded space on this joint not exceeding 40 times the shell thickness), a portion of the outer shell shall be considered as part of the ring section for purposes of computing the ring section modulus. The maximum portion of the outer shell to be used in these calculations is shown in Table 2:

TABLE 2

MAXIMUM PORTION OF OUTER SHELL TO BE USED IN COMPUTING RING SECTION MODULUS

Circumferential ring stiffener to outer shell welds (No. of sides)	Distance between parallel circumferential ring stiffener to outer shell welds	Outer shell section credit
1	.....	20t
2	Less than 20t	20t + L_1
2	20t or more	40t

Where:

t = Outer shell thickness

L_1 = Distance between parallel circumferential ring stiffener to outer shell welds.

If the configuration of the internal or external ring stiffener encloses an air space, this air space must be arranged for venting and be equipped with drainage facilities which must be kept operative at all times.

3.6.4 When load rings in the outer shell are used for supporting the liquid container, they must be designed to carry the liquid container plus its design weight of lading at the static loadings specified in 3.4. Where loads are applied to the outer shell stiffening rings from the support system used to support the inner container within the outer shell, additional stiffening rings, or an increased moment of inertia of the stiffening rings designed for the external pressure, must be provided to carry the support loads. Loads applied directly to the outer shell or outer head must be analyzed in accordance with Appendix G of the ASME Code. [3]

3.6.5 If the outer shell constitutes in whole or in part a stress member used in lieu of a frame, it must conform to the requirements of 8.2.

4. MATERIALS

4.1 Liquid Container. All materials used for the construction of the liquid container and its appurtenances that shall come in contact with the lading must be suitable for use with the lading to be transported. All materials used for the liquid container pressure parts must conform with requirements of the ASME Code in all respects. [3]

4.2 Other Components. All tie rods, mountings and other appurtenances within the outer shell and all piping, fittings, and valves must be of materials suitable for use at the lowest temperature to be encountered.

4.3 Cleaning. Surfaces of the liquid container, associated valves, pumps, piping, etc., which will contact the lading to be transported must be suitably cleaned of contaminants for the service intended. Tanks constructed for oxygen service must be cleaned and inspected for cleanliness employing appropriate methods described in CGA G-4.1, *Cleaning Equipment for Oxygen Service.* [4]

5. JOINTS

5.1 General. All joints for the liquid container must be as required by the ASME Code. [3]

5.2 Welding. For the liquid container, the welding procedure specification, procedure qualification records, and welder qualification tests, including qualification renewals, shall be in accordance with the most current edition of Section IX of the *ASME Boiler and Pressure Vessel Code.* [5]

5.3 Location. All longitudinal welds in liquid containers and a load-bearing outer shell must be so located as not to intersect supports other than load rings and stiffening rings.

5.4 Attachments. Substructures must be properly fitted before attachment, and the welding sequence must be such as to minimize stresses due to the shrinkage of the weld.

6. PIPING AND CONTROLS

6.1 Manholes. Manholes are optional.

6.2 Outlets. With the exception of gauging devices, pressure relief devices, manual vents, and pressure control valves or devices, each opening in the liquid container must be closed with a plug, cap, bolted flange or plate, or provided with a valve conforming to the requirements of 6.5.

6.3 Discharge Control

6.3.1 Shut-Off Valves. Each liquid filling and liquid discharge line must be provided with a manually operable shut-off valve located as close to the tank as is practicable.

6.4 Pressure Relief Devices

6.4.1 Liquid Container. Pressure relief devices shall be provided for the liquid container in accordance with requirements of the most current edition of CGA S-1.2, *Pressure Relief Device Standards—Part 2—Cargo and Portable Tanks for Compressed Gases.* [6] In addition, the following requirements shall apply:

6.4.1.1 Pressure relief devices must be installed to have direct communication with the vapor space of the liquid container near the midpoint of the top centerline, and be so installed and located that the cooling effect of the contents will not prevent effective operation of the device.

6.4.1.2 Connections to pressure relief devices, including entrance and exit piping, must be of sufficient size to provide the required rate of discharge through the pressure relief devices.

6.4.2 Outer Shell. The outer shell must be protected by a suitable pressure relief device to release internal pressure. The discharge area of this device must be at least 0.00024 square inches per pound (0.34 mm^2/kg) of the water capacity of the liquid container. This relief device must function at a pressure not exceeding the internal design pressure of the outer shell, calculated in accordance with the ASME Code, or 25 psig (172 kPa), whichever is less. [3]

6.5 Piping, Valves, and Fittings

6.5.1 Welded pipe joints must be used wherever possible. Where copper tubing is permitted, joints must be brazed or made with equally strong metal unions. Metal unions must not decrease the strength of the tubing, as by cutting threads or grooves. The melting point of brazing material must be no lower than 1000°F (538°C). The materials used in valves and fittings must be suitable for use at the temperature of the lading.

6.5.2 The bursting strength of all pipe, fittings, and hose must be at least four times the CGA design pressure of the liquid container and not less than four times the pressure to which they shall be subjected in service by the action of a pump or other device, the action of which shall subject portions of the piping to pressures greater than the liquid container's CGA design pressure.

6.5.3 Each valve must be designed and constructed for a rated pressure not less than the liquid container's CGA design pressure at the coldest temperature expected to be encountered.

6.5.4 Valve parts or fitting parts made of aluminum which are subject to internal rubbing or abrasion in normal service shall not be used with oxygen.

6.5.5 Suitable provisions must be made to prevent damage to piping due to thermal expansion and contraction, jarring, and vibration.

6.5.6 All pipe, valves, and fittings must be proven free from leaks at not less than their design pressure.

6.5.7 Piping must be grouped and protected from damage as required by Section 7.

6.5.8 Each portion of liquid piping which can be closed at both ends must be provided with a pressure relief valve without an intervening shut-off valve.

6.5.9 Wherever a pressure building coil is used on a cargo tank, the vapor connection to the coil must be provided with a valve or check valve. The liquid connection to the coil must be provided with a shut-off valve. All such valves must be as close to the tank as practicable to prevent loss of lading in case of damage during transportation.

6.5.10 All loading, unloading, and hose connections shall conform to CGA V-6, *Standard Cryogenic Liquid Transfer Connections.* [7]

7. PROTECTION OF PIPING, VALVES, AND FITTINGS

7.1 General. All pressure relief devices and their inlet piping, and all valves, fittings, and other accessories which are in communication with the liquid container without intervening shut-off valves or check valves, must be installed within the motor vehicle framework or within a suitable collision resistant guard or housing, and appropriate ventilation must be provided. Pressure relief devices must be protected so that in the event of the upset of the vehicle onto a hard surface, their opening will not be prevented and their discharge will not be restricted. Every part of the loaded cargo tank and any associated valve or pipe, enclosure, or protective device or structure (exclusive of the wheel assemblies) must be at least 14 inches (360 mm) above level ground.

7.2 Mid-Tank Piping. Piping and valves subject to liquid container pressure during transportation that are not located at the rear of and within the protection of the cargo tank's circumference and the vehicle frame, or which do not have intervening shut-off valves or check valves which are located within the motor vehicle framework, must be protected by a protective device or housing which meets the requirements of 7.3.

7.3 Protective Housing. The protective devices or housings and their attachments to the cargo tank structure must be designed to withstand static loading in any direction in which they will be loaded. The static loading shall be equal to twice the weight of the cargo tank and attachments when the cargo tank is filled with the lading. The strength of these devices or housings and their attachment to the vehicle structure must be based on a stress no higher than the minimum ultimate stength of the material.

7.4 Rear Bumper. Each tank motor vehicle must be provided with at least one rear bumper designed to protect the outer vessel and piping in the event of a rear end collision. The bumper design must transmit the force of the collision directly to the chassis of the vehicle. The rear bumper and its attachments to the chassis must be designed to withstand a load equal to twice the weight of the loaded cargo tank and attachments, based on a safety factor of four on the minimum ultimate strength of the material used with such load being applied horizontally and parallel to the major axis of the cargo tank.

The rear bumper dimensions must meet the requirements of 49 CFR 393.86 of the U.S. Motor Carrier Safety Regulations, and the bottom edge of the rear bumper must be no higher than 30 inches (760 mm) from the ground. [8] The bumper, or a vertical post attached to the bumper, must extend vertically to a height adequate to protect all valves and fittings forward of the bumper if damage could cause loss of lading.

8. SUPPORTS AND ANCHORING

8.1 Cargo Tank with Frame. Each cargo tank with a frame not made integral with the outer shell as by welding, must be provided with positive restraining devices for drawing the cargo tank down tight on the frame without introducing undue concentrations of stresses. In addition, suitable stops or anchors must be attached either to the frame or to the outer shell to prevent relative motion between them from occurring as a result of starting, stopping, and turning of the vehicle. The stops and anchors must be so installed as to be readily accessible for inspection and maintenance. The stops and anchors and their attachments to the frame and outer shell must be capable of withstanding the minimum static loadings required by 8.2.

8.2 Frameless Cargo Tank. A cargo tank constructed so that the outer shell constitutes, in whole or in part, the structural members used in place of a structural frame must have the cargo tank supported by external cradles or other suitable supporting devices such as load rings. Cradles used

without other stiffening means must subtend at least 120 degrees of the circumference to which they are attached. The supports and their attachments to the cargo tank must be designed to withstand minimum static loadings of:

(a) vertically downward of 2
(b) vertically upward of 2
(c) longitudinal of 2
(d) lateral of 2

times the weight of the cargo tank and its attachments when filled to the design weight of lading. The stresses induced into the supports, their attachments, and the outer shell shall not exceed 25 percent of the room temperature minimum ultimate strength of the materials used. The effects of fatigue must be considered in the calculation. All attachments of supports to inner vessels and to load-bearing outer shells must be by means of pads of material similar to that of the inner vessel or outer shell, respectively, by load rings, or by bosses so designed or gussetted as to distribute the load.

9. GAUGING DEVICES

9.1 Level Gauging Devices

9.1.1 Each cargo tank, except cargo tanks filled by weight, must be equipped with one or more gauging devices to indicate the maximum permitted liquid level. Permitted gauging devices shall be a fixed length dip tube or differential pressure liquid level gauge.

9.1.2 The volume setting of a fixed length dip tube must be indicated in a visible location at or adjacent to the valve.

9.1.3 The design pressure of each liquid level gauging device must be no lower than that of the liquid container.

9.1.4 A liquid level gauging device used as a primary control for filling must be designed and installed to indicate the maximum filling level with the cargo tank parked on a level surface.

9.2 Pressure Gauges. All cargo tanks must be provided with a pressure gauge located in the operating compartment. A shut-off valve must be installed between the gauge and the cargo tank.

9.3 Vacuum Gauges. Each vacuum-insulated cargo tank must be provided with a connection for a vacuum gauge to the insulation space.

10. PUMPS

Liquid pumps, if used, must be of a suitable design. Parts made of aluminum which are subject to internal rubbing or abrasion in normal service must not be used with liquid oxygen ladings. Pumps may be driven by motor vehicular power take-off or other mechanical, electrical, or hydraulic means. The downstream piping must be protected from overpressurization.

11. TESTING

11.1 General. Inspection of materials of construction of the liquid container and its appurtenances, excluding the outer shell, must be as required by the ASME Code. The liquid container must be subjected to either a hydrostatic or a pneumatic test in accordance with the ASME Code. [3]

11.2 Piping and Appurtenances. Piping and appurtenances must be tested to at least 110% line operating pressure.

12. MARKING OF TANKS

12.1 Code and Name Plate. A code plate with the markings required by the ASME Code under which the liquid container was constructed, and a corrosion resistant metal nameplate, must be permanently affixed by brazing, welding, or riveting to the outer shell in a readily visible location. The nameplate must be plainly marked by stamping, embossing, or other means and form characters not less than 3/16 inch (5 mm) high into the metal of the plate. The plate must be marked with the following information and shall include the use of the parenthetical abbreviations. Cargo tanks for use in Canada shall be marked in metric units.

(1) CGA Specification Number (CGA-341).

(2) Tank Manufacturer (Tank Mfr.).

(3) Manufacturer's serial number (S/N).

(4) Date of manufacture as month and year (Date of Mfr.).

(5) Design weight of lading (Design Wgt. of Lading _____ lbs; _____ kg).

(6) Water capacity (W. Cap _____ lbs; _____ kg). Water capacity shall be based on a density of water (8.32828 lbs/U.S. gallon (0.9980 kg/liter)) with the liquid container at its design service temperature after deduction for the volume above the inlet of the pressure relief or pressure control valve.

(7) Design service temperature (Design Service Temp. _____ °F) (_____ °C).

(8) Original test date (Orig. Test Date).

(9) Insulation Description: (INSULATION FOR OXYGEN) or (INSULATION NOT FOR OXYGEN).

(10) In Canada, the Canadian Registration Number of the pressure vessel design as provided by the Province of principal use and others in which the design has been registered.

13. CERTIFICATION

13.1 General. For each cargo tank, the cargo tank vehicle manufacturer must supply, and the owner must obtain, the following:

13.1.1 In the United States, the liquid container manufacturer's report required by the ASME Code.

13.1.2 The certificate stating that the mounted cargo tank is in complete compliance with Specification CGA-341 and the applicable codes noted in 13.1. The certificate shall be signed by a responsible employee of the cargo tank vehicle manufacturer. The certificate must state whether or not it includes certification that all valves, piping, and protective devices comply with the requirements of the specification.

13.1.2.1 In the case of a cargo tank manufactured in two or more stages, each manufacturer that performs a manufacturing operation on the incomplete vehicle or portion thereof, shall furnish to the succeeding manufacturer at or before the time of delivery, a certificate covering the particular operation performed by that manufacturer. The certificates must include sufficient information such as sketches, drawings, or other clear descriptions of the particular work performed by that manufacturer. Each certificate must be signed by an official of the manufacturing firm responsible for the portion of the completed cargo tank vehicle represented thereby, such as basic cargo tank fabrication, insulation, jacketing, or piping.

13.1.3 A photograph, pencil rub, or other facsimile of the plates required in Section 12 of this specification.

13.2 Retention. The owner shall retain a copy of the data report and certificates and related papers in a file throughout the ownership of the cargo tank and for at least one year thereafter. In the event of change in ownership, retention by the prior owner of non-fading, photographically reproduced copies will be deemed to satisfy this requirement. Each motor carrier using the cargo tank, if not the owner thereof, shall obtain a copy of the data report and certificate and retain them in their files during the time they use the cargo tank and for at least one year thereafter.

14. REFERENCES

[1] *Code of Federal Regulations*, Title 49 CFR Parts 100-179 (Transportation), U.S. Department of Transportation, Superintendent of Documents, Government Printing Office, Washington, DC 20402.

[2] *Transportation of Dangerous Goods Regulations*, Supply and Services Canada, Canadian Publications Centre, Ottawa, Ontario K1A 0S9.

[3] *ASME Boiler and Pressure Vessel Code*, (Section VIII), American Society of Mechanical Engineers, 345 East 47th Street, New York, NY 10017.

[4] CGA G-4.1, *Cleaning Equipment for Oxygen Service*, Compressed Gas Association, Inc., 1235 Jefferson Davis Highway, Arlington, VA 22202.

[5] *ASME Boiler and Pressure Vessel Code*, (Section IX), American Society of Mechanical Engineers, 345 East 47th Street, New York, NY 10017.

[6] CGA S-1.2, *Pressure Relief Device Standards—Part 2—Cargo and Portable Tanks for Compressed Gases*, Compressed Gas Association, Inc., 1235 Jefferson Davis Highway, Arlington, VA 22202.

[7] CGA V-6, *Standard Cryogenic Liquid Transfer Connections*, Compressed Gas Association, Inc., 1235 Jefferson Davis Highway, Arlington, VA 22202.

[8] *Code of Federal Regulations*, Title 49 CFR Parts 390-397 (Transportation), U.S. Department of Transportation, Superintendent of Documents, Government Printing Office, Washington, DC 20402.

NH

Eight Steps To Ordering A Complete NH System

The following steps will guide you to a complete NH Series system for your application.

For help:

- Complete the Application Data Form on pages 180 and 181
- Review the NH Series specifications page 71.
- Refer to the Engineering section for selection assistance.
- Consult your local Industrial Devices distributor, or cal the factory.

1. Base Model Number

Select the NH model which provides sufficient thrust and speed for the application, with a comfortable margin of safety. Available thrust will be consumed by acceleration, friction, pushing/pulling against an external force, and is the case of a vertical application, supporting the load against gravity. Refer to the NH Speed vs. Thrust curves in this section. When making this selection, be sure to consider duty cycle, side loading, back driving, and the other design considerations from the IDC Application Data Form.

2. Stroke Length

Seven standard travel lengths are available from 2 to 24 inches. Custom lengths are also available. Consult your IDC distributor or the factory for details.

To maximize cylinder life, the thrust tube should not impact either physical end of stroke during normal operation. Extra travel length is needed to decelerate the load to a stop when an end-of-travel limit switch is encountered. This extra travel distance depends on load and speed. Consult the Engineering Section.

3. Motor Mounting (Parallel Units Only)

NH cylinders with gear or timing belt drive reductions have the motor mounted parallel to the lead screw. (With in-line units, the motor is always coupled directly to the screw shaft, with no reduction.)

Though most customers use the standard parallel configuration, NH Series parallel models offer two motor mounting options for optimum integration into your machine. See pages 78 to 83 for full dimensional drawings.

① Base Model Number				② Stroke Length	③ Parallel Motor Mounting	④ Cylinder Mounting	⑤ Rod End	⑥ Options
Rod-Type Cylinder	H Series Motor	Drive Ratio	Screw Pitch, Type					
N	H	99	8A	— 2 —		— MS6 —	FS2 —	P6 - Q - ZH

Ball Screw	Acme Screw
NH102B-	NH105A-
NH105B-	NH155A-
NH152B-	NH155A-
NH155B-	NH205A-
NH205B-	NH355A-
NH355B-	NH358A-

In-Line Models	
NH992B-	NH995A-
NH995B-	NH998A-

② Stroke Length

2, 4, 6, 8, 12, 18, 24

Custom lengths up to 48 inches

③ Parallel Motor Mounting

blank (standard)

-RM (reverse parallel)

Does not apply to in-line models

④ Cylinder Mounting

No Charge

-MP2	-MS6	-FT1
-MS1	-MXA	-MT1
-MF1	-MXB	-FE2
-MF2	-MXC	
-MF3	-MP1	

Additional Charge

-MP3	-FS2
	-FC2

⑤ Rod End

⑥ Options

-BS	-H
-DB	-L
-EM	-W
-F	-Q
	-PB
	-Z*
	-ZH*

*-Z or -ZH required for cylinders controlled by H3851, H3951 or H3952 controls.

4. CYLINDER MOUNTING

Specify any one of these cylinder mounting options. See pages 78-83 for dimensional drawings.

Cylinder base mount options -MP2, -MP3, -MF2, -MF3, -MXB, -MXC cannot be ordered with in-line models.

MF1, 2, 3 Rectangular Flanges

MF1 Front Flange
MF2 Rear Flange
MF3 Both Flanges

MP2 Rear Clevis

MS1 Side End Angles

MXA, B, C Extended Tie Rods

MXA Front
MXB Rear
MXC Both

MS6 Side Tapped Holes

MT2 Trunnion (In-Line Models Only)

5. ROD ENDS

IDC offers 5 rod end options for NH Series cylinders. Carefully consider the best method of attaching the load to provide optimum performance and long life, by preventing excessive backlash, side load moments, rod end rotation, and misalignment. To determine overall cylinder length, be sure to include the rod end dimensions, see page 78.

-FT1 Female thread

-MT1 Male thread

-FE2 Female eye

-FS2 Spherical joint (includes -FT1)

-FC2 Clevis (includes -MT1)

6. OPTIONS

Industrial Devices offers several NH Series cylinder options to satisfy unique application requirements.

See the Options and Accessories section for complete specifications of these options.

-BS Holding Brake
20 in-lb holding brake mounted on the rear lead screw shaft extension. *Not available on in-line models or with cylinder base mount options (-MF2, -MF3, -MS1, -MP2, -MP3, -MXB, -MXC).*

-DB Dual Road End Bearing
Dual rod-end bearings increase side moment load rating to 75 in-lbs. *This option reduces actual stroke length by 1.5 inches.*

-EM Encoder
500 line incremental encoder mounted on the rear shaft of the motor. Order -Z or -ZH instead of -EM when using cylinders with H3852, H3951 or H3951 controls.

-F Sub-Freezing Environment
Increased internal clearances allow thermal expansion and contraction for operation to -20°F. *Increases system backlash to 0.025 inches max.*

-H High Temperature
Increases maximum cylinder operating temperature to 180°F by changing internal materials and lubricants.

Note: -F and -H are not compatible.

-L Linear Potentiometer Output
Linear potentiometer mounted inside the NH cylinder.

-PB Protective Boot
Protects the thrust tube from solid contaminants and prevents liquids from entering the cylinder through the rod end bearing. This option increases overall cylinder length.

-Q Motor Quick Disconnect
Male quick disconnect receptable installed in the back of the cylinder drive housing, including a 12 ft. motor cable with molded quick disconnect plug. *Inline models have the disconnect receptable installed in the motor.*

-W Water Resistant Option
provides protection from light moisture contact with cylinder.

-Z and -ZH Encoder *and* Home Position Sensor
Required for NH cylinders controlled by H3851, H3951 and H3952.

-Z Combines -EM encoder with one RPS-1 normally open reed switch, tested at factory as a system. -ZH combines -EM with one RP1, normally open Hall effect switch.

7. ACCESSORIES

Accessories are ordered as separate items, with separate model number. **Details can be found in the Options and Accessories section.**

Magnetic Position Sensors

Position sensors are available for stopping position indication, for changing direction or speed, and more using the H3301 Control.

All H Series controls use normally closed switches (RP2 or RPS-2) for end-of-travel limit sensing. ***To maximize cylinder life, IDC recommends the use of end-of-travel limit switches with all cylinders.***

RP1 Normally open Hall-effect switch

RP2 Normally closed Hall-effect switch

RPS-1 Normally open reed contact switch

RPS-2 Normally closed reed contact switch

8. H3000 SERIES CONTROLS

To complete the system, IDC offers controls which are optimized to run NH Series cylinders.

Details of the H3000 Series controls begin on page 99.

INDIVIDUAL MODEL SPECIFICATIONS—BALL SCREW MODELS

	NH102B	NH105B	NH152B	NH155B	NH205B	NH355B	NH992B	NH995B
Drive Type	Timing Belt	Timing Belt	Timing Belt	Timing Belt	Timing Belt	Helical Gear	In-line Direct Flex Coupled	
Drive Ratio (motor:screw)	1:1	1:1	1.5:1	1.5:1	2:1	3.5:1	1:1	1:1
Screw Pitch (rev/inch)	2	5	2	5	5	5	2	5
Load Before Back Driving (lbs)	10	20	10	20	20	20	10	20

SYSTEM PERFORMANCE USING H3000 SERIES CONTROLS

	Stroke							
Maximum Acceleration (ips^2 at no load)		200	110	140	90	70	40	200	110
Maximum Speed (ips at no load)	*2-18 in*	30	12	16	8	6	3.2	30	12
	24 in	**18**	**10**	16	8	6	3.2	**18**	**10**

When applying NH cylinders with greater than 18 inch stroke, maximum speed may be limited by critical screw speed, as shown here in bold. The individual model performance curves shown on the following pages have been qualified (horizontal black lines) for critical speed limitations in 24 inch lengths.

Maximum Thrust (lbs)	135	350	200	550	700	800	135	350
Repeatability (inches)	Repeatability values achievable with H3951 control.							
	± 0.003	± 0.001	± 0.003	± 0.001	± 0.001	± 0.001	± 0.003	± 0.001

A COMPARISON OF SPEED VS THRUST PERFORMANCE

For duty cycle limitations, see the individual model performance curves on page 74.

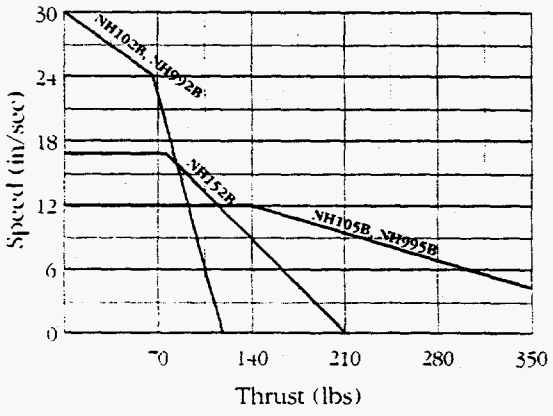

HIGHER SPEED MODELS

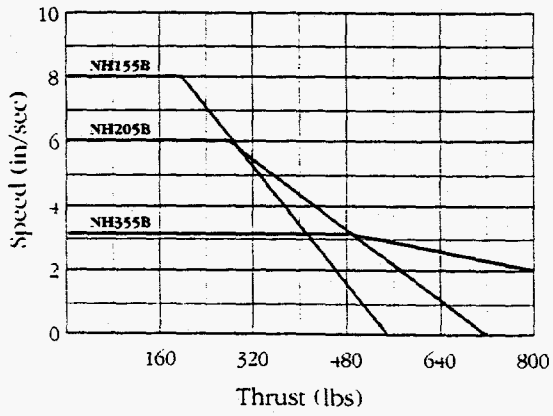

HIGHER THRUST MODELS

INDIVIDUAL MODEL SPECIFICATIONS—ACME SCREW MODELS

NH105A	NH155A	NH158A	NH205A	NH208A	NH355A	NH358A	NH995A	[NH998A]
Timing Belt	Timing Belt	Timing Belt	Timing Belt	Timing Belt	Helical Gear	Helical Gear	In-Line Flex Coupled	
1:1	1.5:1	1.5:1	2:1	2:1	3.5:1	3.5:1	1:1	1:1
5	5	8	5	8	5	8	5	8
400	400	800	400	800	400	800	400	[800]

SYSTEM PERFORMANCE USING H3000 SERIES CONTROLS

110	90	50	70	45	40	25	110	60
12	8	5	6	3.8	3.4	2	12	7.5
10	8	5	6	3.8	3.4	2	**10**	7.5

When applying NH cylinders with greater than 18 inch stroke, maximum speed may be limited by critical screw speed, as shown here in bold. The individual model performance curves shown on the following pages have been qualified (horizontal black lines) for critical speed limitations in 24 inch lengths.

150	220	360	290	475	500	800	150	[230]

Repeatability (inches) Repeatability values achievable with H3951 control.

± 0.001	± 0.001	± 0.001	± 0.001	± 0.001	± 0.001	± 0.001	± 0.001	[±0.001]

A COMPARISON OF SPEED VS THRUST PERFORMANCE

For duty cycle limitations, see the individual model performance curves on page 75.

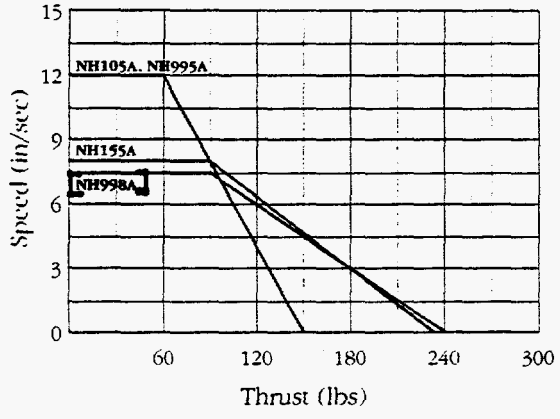

HIGHER SPEED MODELS

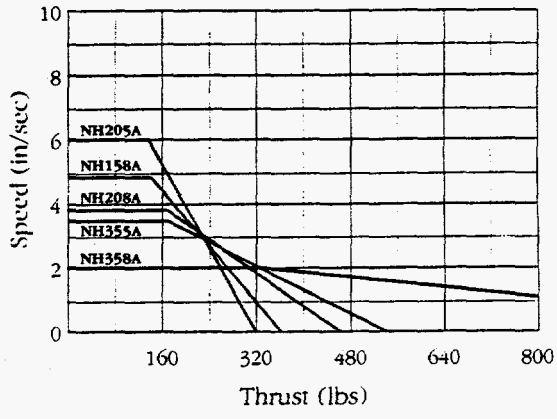

HIGHER THRUST MODELS

THRUST VS. SPEED PERFORMANCE
ACME SCREW MODELS

Performance using H3000 Controls.
Duty cycle percentage of "on time" is shown on each performance curve. For operation in the 60% or 30% region, motor temperature rise due to load, speed, number of acceleration/decelerations, and ambient temperature require consideration. Refer to the Engineering section.

NH998A (In-Line Model)

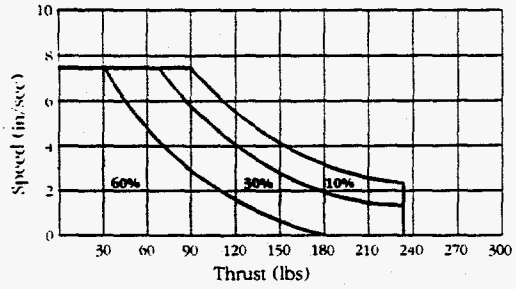

NH105A and NH995A (In-Line Model)

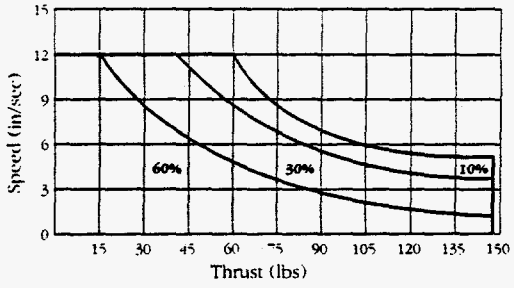

NH158A

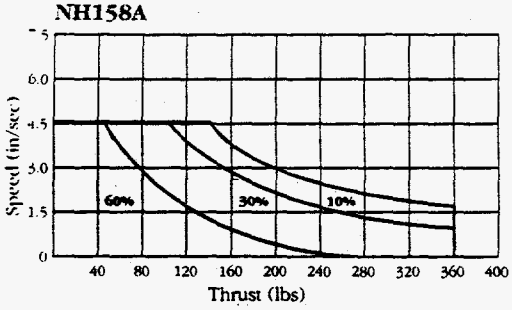

NH155A

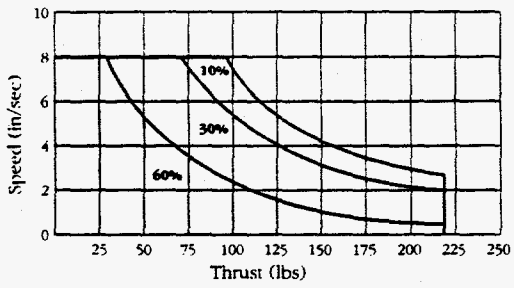

NH208A

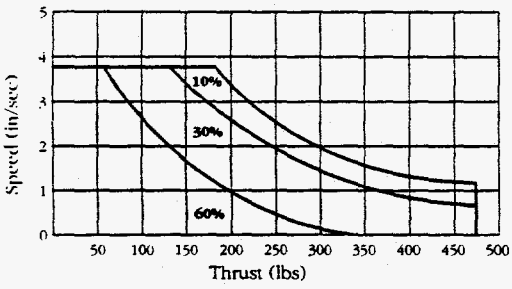

NH205A

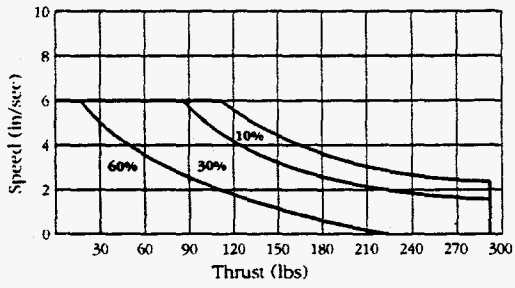

NH358A

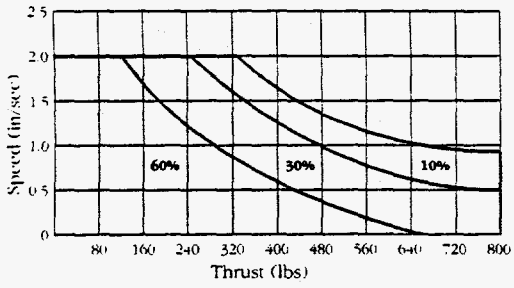

NH355A

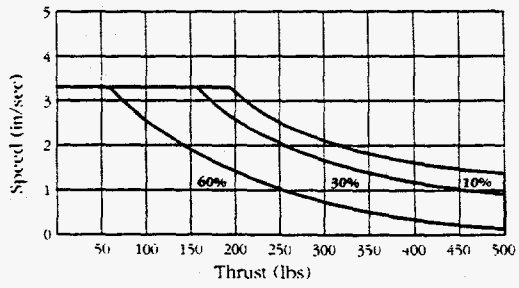

MS6 SIDE TAPPED MOUNTING

NLINE

- CAD drawings are available on diskette
- Include rod end dimensions, see page 78

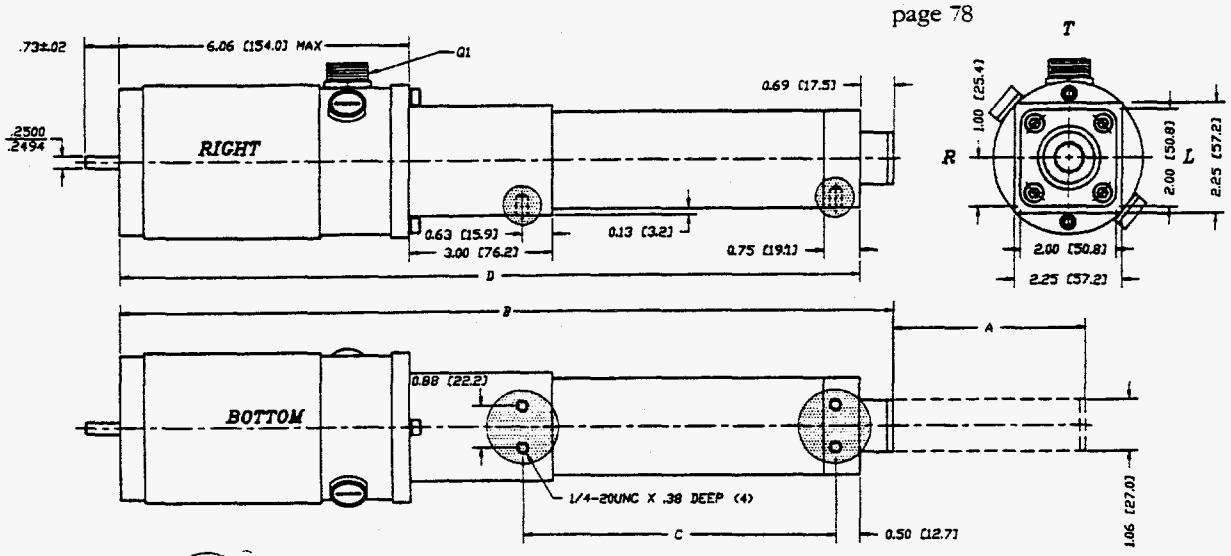

	Inches	(Metric)											
A Stroke	2.00	(50.8)	4.00	(101.6)	6.00	(152.4)	8.00	(203.2)	12.00	(304.8)	18.00	(457.2)	24.00 (609.6)
B Retract	13.15	(334.0)	15.15	(384.8)	17.15	(435.6)	19.15	(486.4)	23.15	(588.0)	29.15	(740.4)	35.15 (892.8)
C Mounting	4.56	(115.8)	6.56	(166.6)	8.56	(217.4)	10.56	(268.2)	14.56	(369.8)	20.56	(522.2)	26.56 (674.6)
D Overall	12.47	(316.7)	14.47	(367.5)	16.47	(418.3)	18.47	(469.1)	22.47	(570.1)	28.47	(723.1)	34.47 (875.5)

MT2 TRUNNION MOUNTING

INLINE

- CAD drawings are available on diskette
- Include rod end dimensions, see page 78

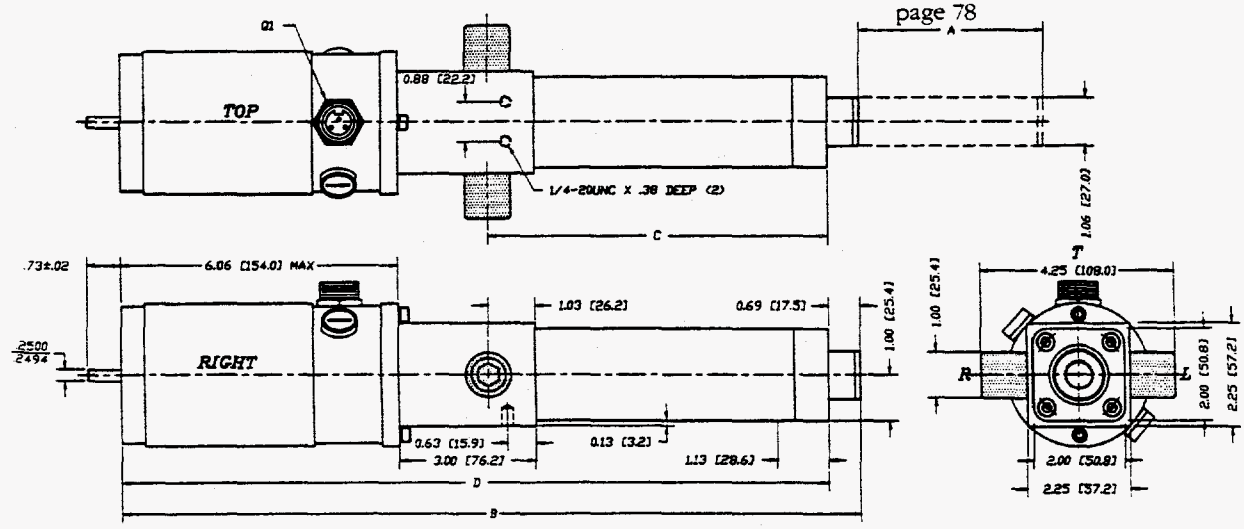

	Inches	(Metric)											
A Stroke	2.00	(50.8)	4.00	(101.6)	6.00	(152.4)	8.00	(203.2)	12.00	(304.8)	18.00	(457.2)	24.00 (609.6)
B Retract	13.15	(334.0)	15.15	(384.8)	17.15	(435.6)	19.15	(486.4)	23.15	(588.0)	29.15	(740.4)	35.15 (892.8)
C Mounting	5.47	(138.9)	7.47	(189.9)	9.47	(240.5)	11.47	(291.3)	15.47	(392.9)	21.47	(545.3)	26.56 (674.6)
D Overall	12.47	(316.7)	14.47	(367.5)	16.47	(418.3)	18.47	(469.1)	22.47	(570.1)	28.47	(723.1)	34.47 (875.5)

STANDARD PARALLEL MOUNTED MOTOR

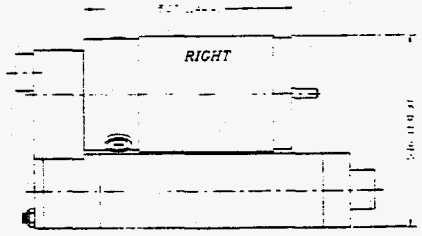

REVERSE PARALLEL MOUNT (-RM OPTION)

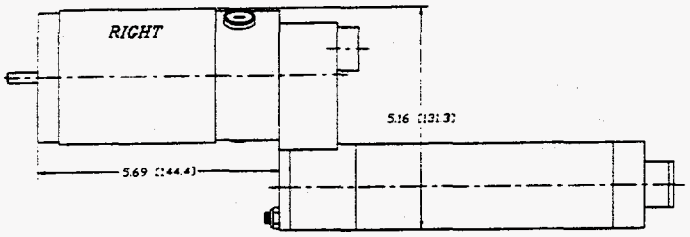

ROD ENDS

FT1

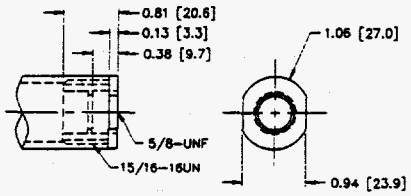

MT1

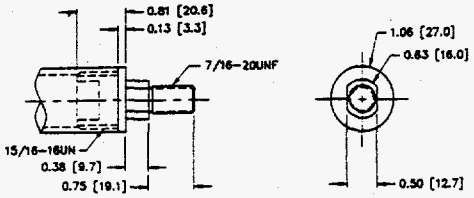

FC2

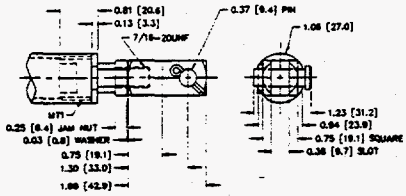

FE2

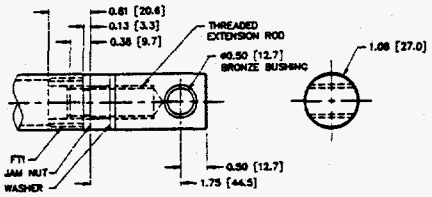

FS2

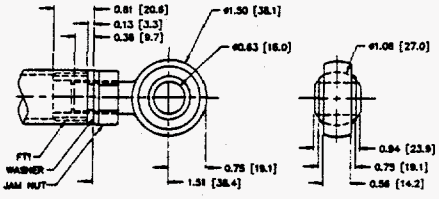

MF1 HEAD RECTANGULAR FLANGE MOUNTING

PARALLEL

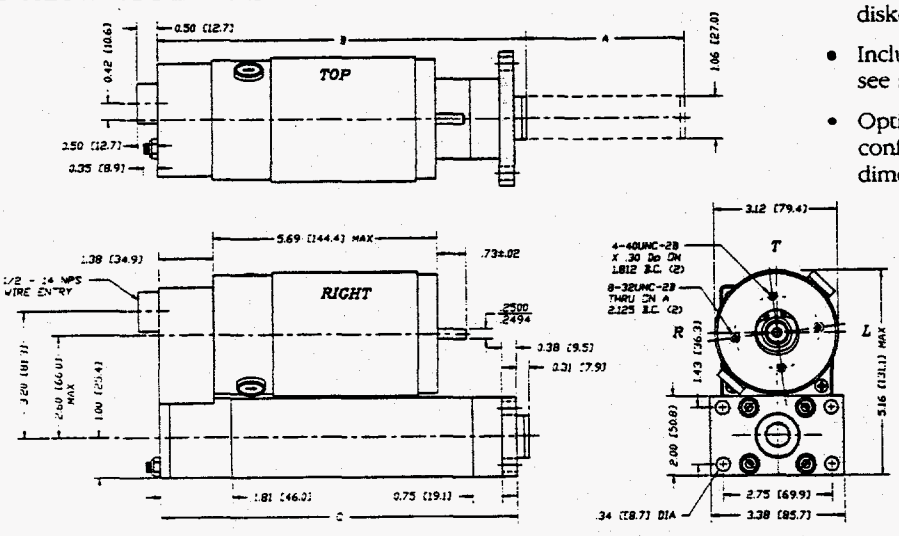

- CAD drawings available on diskette
- Include rod end dimensions. see above
- Optional reverse parallel configuration (-RM) dimensions. see above

	Inches	(Metric)											
A Stroke	2.00	(50.8)	4.00	(101.6)	6.00	(152.4)	8.00	(203.2)	12.00	(304.8)	18.00	(457.2)	24.00 (609.6)
B Retract	7.37	(187.2)	9.37	(238.0)	11.37	(288.8)	13.37	(339.6)	17.37	(441.2)	23.37	(593.6)	29.37 (746.0)
C Mounting	7.06	(179.3)	9.06	(230.1)	11.06	(280.9)	13.06	(331.7)	17.06	(433.3)	23.06	(585.7)	29.06 (738.1)

H

CONTROLS

The H3851 and H3951 controls are both microprocessor-based, closed loop servo positioning systems which use incremental encoder feedback to provide accurate positioning control of NH and RH Series cylinders.

PROGRAMMING

Both units use an advanced motion control language accessed by a built-in keypad/LCD display or by RS232C Serial Communication to create up to 98 programs containing move profiles and functional operations.

INTERFACE

Each has twelve inputs and ten outputs which offer a variety of I/O configurations—allowing the units to stand alone or be easily interfaced with external devices such as computers, PLCs, or simple push-button operator stations.

H3851

The H3851 executes a pre-defined move by closing a velocity loop to provide smooth and reliable speed regulation. As is nears the end of a move, the unit introduces a "speed reduction" to a fixed low speed velocity at a user defined, set distance from the end point called the FINAL MOVE to achieve a high degree of positioning repeatability.

[H3951]

The H3951 uses an advanced move algorithm to reduce move cycle time, substantially increasing system throughput. The move algorithm closes a velocity servo loop to provide smooth and reliable speed regulation and closes a position servo loop to obtain accurate positioning (without a final move) couple with the ability to hold position before and after moves. Both servo loops can be optimized by adjusting PID tuning parameters accessible to users.

BASIC H3851/3951 SYSTEM

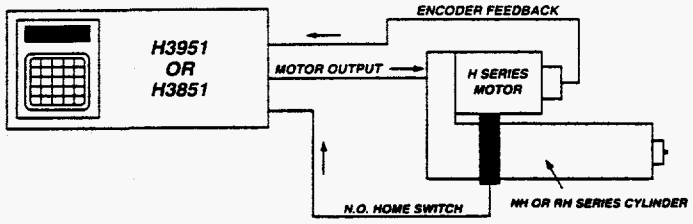

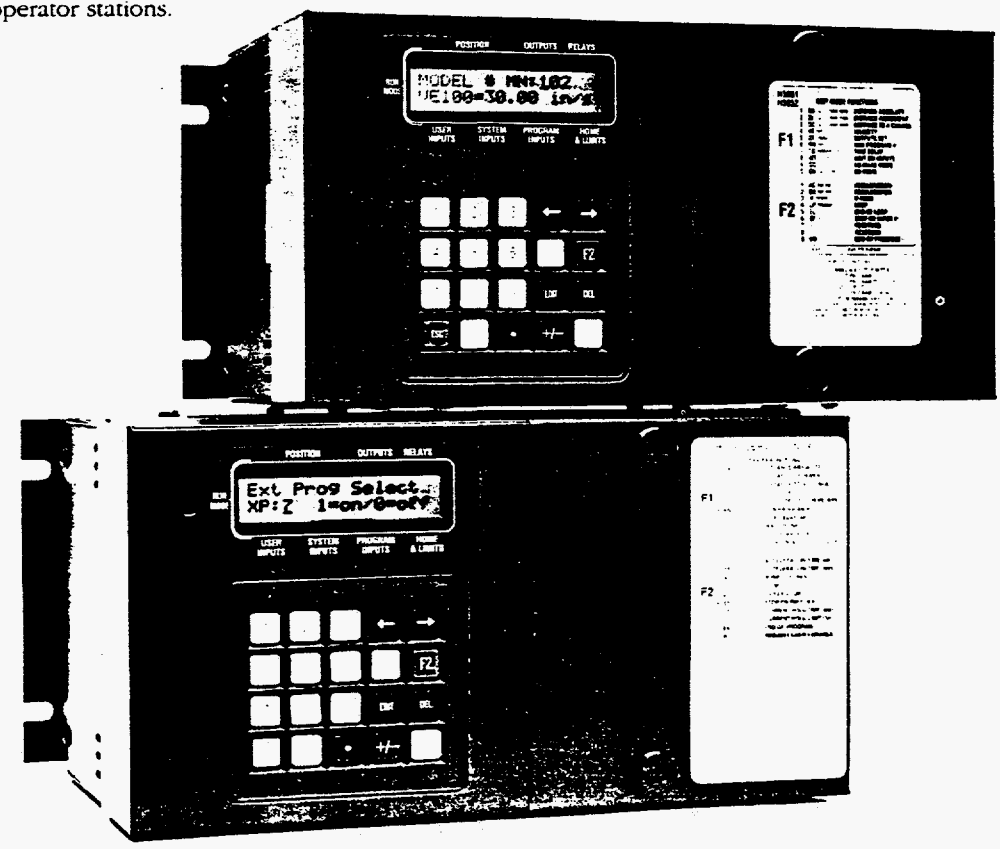

SYSTEM COMPONENTS

The Control and Cylinder System

1. 1 H3851 or H3951 Control
2. 1 NH or RH Series Electric Cylinder (with a mounted H Motor)
3. 1 Encoder—500 line (2000PPR) mounted to the H Motor
4. 1 Home Switch
   Normally Open Magnetic Position Sensors
   RPS-1: Reed Switch (Mechanical Contact)
   RP1: Hall Effect Switch (Solid State)
5. Two End-of-Travel "Extend and Retract" Limit Switches
   Normally Closed Magnetic Position Sensors
   RPS-2: Reed Switch (Mechanical Contact)
   RP2: Hall Effect Switch (Solid State)
   Extend and Retract End-of-Travel Limit Switches are Not Required for System Operation but are RECOMMENDED for Overtravel Protection.

REMOTE KEYPAD

The model H3952 control offers all the features of the H3951 with the addition of a Remote Keypad and LCD Display for panel mounting or remote stand alone operation.

When restrictions such as panel mounting, operator interface considerations, or environmental requirements require control off-site, the H3952 is the correction solution.

The H3952 comes standard with 6 feet of remote ribbon cable, shielded wire cable of lengths 10 feet and 20 feet are also available.

Options: CS10 10 feet of shielded wire cable
CS20 20 feet of shielded wire cable

Z OPTION FOR NH AND RH SERIES CYLINDERS

All NH and RH Cylinders controlled by an H3851 or H3951 must include an encoder for feedback and a Home Limit Switch (for start up reference position). To simplify the ordering and installation process, the Z Option containing an encoder pre-wired to the control and a home limit switch, is available for NH and RH Series cylinders.

Z OPTION

- RPS-1 Normally Open Home Switch (Reed Type)
- Encoder (Prewired to Control)

ZH OPTION

- RP1 Normally Open Home Switch (Hall Effect Type)
- Encoder (Prewired to Control)

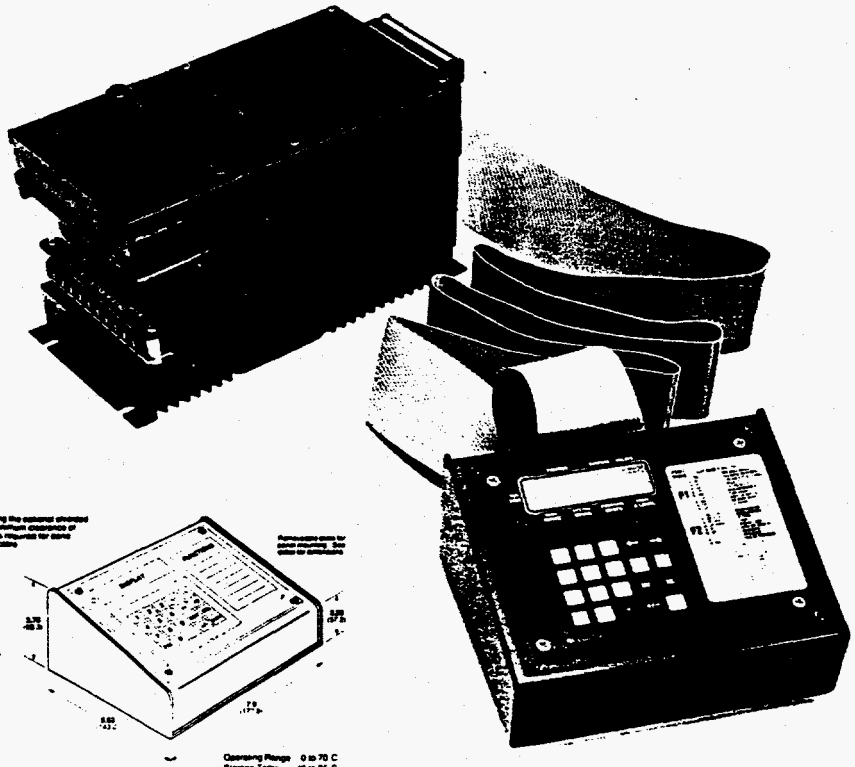

DIMENSIONS

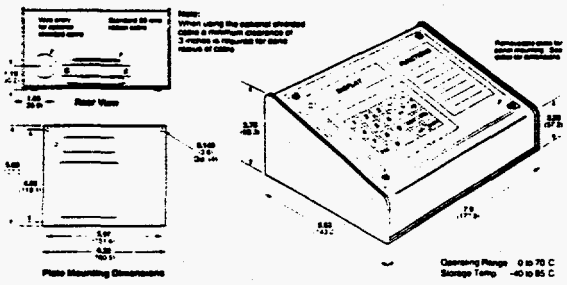

ENVIRONMENTAL SPECIFICATIONS

OPERATING

Temperature	32°F to 130°F (0 to 55°C) Note: An internal thermostat will shut down the drive if the internal air temperature exceeds 160°F (71°C)
Heat Sink Temperature	212°F (100°C)
Storage Temperature	-40° to 185°F (-40 to 85°C)
H Motor	180°F (82°C) (max. case temp.):

ENCODER

Operational	Dual Channel TTL Level Feedback
Power Requirement	5 VDC at 90ma
Pulses Per Rev.	500 lines with quadrature (2000PPR)
Interface	Line Driver
Cabling	8 Wire Shielded Cable W/Twisted Pair Maximum length 200 ft. (22AWG)

MOTOR

Operational	Permanent Magnet 2 Pole DC Motor. 2 lead
Voltage	Rated 160 VDC. 180 VDC max
Current	2 amps continuous. 6 amp peak
Torque	108 oz-in
No Load Speed	3600 RPM
Windings	
Resistance	6.4 ohms
Inductance	21 mh
Cabling	Less than 50ft (16AWG). 50-100ft (14AWG). 100-200ft (10AWG)
Brushlife	5 Million Cycles, 5000 Hours

DIMENSIONS

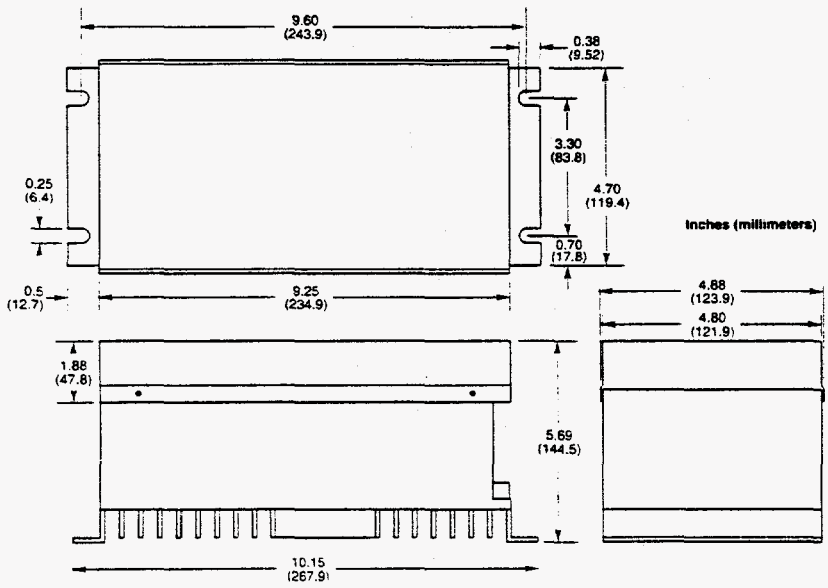

SPECIFICATIONS

MOTOR/POWER

Input Power	95 to 132 VAC @ 50/60 Hz: 5 amps max, 10 amps peak
Motor Output	160 VDC @ 2 amps continuous; 4.5 amps peak
Output Type	PWM; MOSFET, bipolar H-bridge; switching @ 20 kHz
Capacitor	680uf (4700uf max), 200 VDC, Polarized

OPERATIONAL

Velocity Range	1-100% (linear speeds are cylinder dependent)
Accel/Decel Range	0.05-15 sec.
Position Range	(±) 0-999.999 inches
Coordinate System	Absolute or Incremental
Linear Positioning Repeatability	0.001 inches (NH and RH cylinders w/5B, 5A, & 8A screw types) 0.003 inches (NH and RH cylinders w/2B)

LOGIC POWER

Rating	12 VDC unregulated at 500 ma 250 ma available to power external devices

INPUTS

High Level Inputs	H3951 (±)SI1, (±)SI2, (±)SI3, (±)SI4 H3851 (±)IN3, (±)IN4, (±)SI1, (±)SI2
Operational	Optically isolated Sinking or Sourcing Inputs Jumper Selectable AC or DC Voltage Activation
Power Requirement	VDC 10 to 30 VDC at 44 ma max VAC 95 to 130 VAC at 14 ma max
Low Level Inputs	HOME, EEOT, REOT, PRG1, PRG2, PRG3, IN1, IN2
Operational	Optically isolated, sinking inputs
Rating	Draws 20 ma @12 VDC (10-16 VDC isolated voltage range) All Inputs must be stable for a minimum of 10ms to be recognized

OUTPUTS

Relay Outputs	(COM2, NC2, NC1) & (COM1, NC1, NO1)
Operational	SPDT normally open/normally closed contacts
Contact Ratings	2 amps at 30 VDC resistive 2 amps at 125 VAC resistive
Low Level Outputs	OUT1, OUT2, OUT3, SO1, SO2, HOUT, LOUT, MCOM
Operational	Optically Isolated NPN Open Collector Sinking Outputs
Ratings	ON Sinking to ground, 250 ma @1.5VDC OFF Open circuit high, 2ma @12VDC

COMMUNICATIONS

Operational	Serial RS232 Communication
RS232C Setup	9600 baud, 8 data bits, no parity, 1 stop bit Three wire implementation (no handshaking).

SOFTWARE/PROGRAMMING

	H3851	H3951
Memory	2K Non-Volatile EEPROM (1.5K available for programming)	8K Non-Volatile EEPROM (7.5K available for programming)
Programs	Up to 98 Motion Programs	Up to 98 Motion Programs
	Up to 256 Characters per program (not to exceed the 1.5K of total available program memory)	Up to 1000 Characters per program (not to exceed the 7.5K of total available program memory)
Command Format	2 character upper-case ASCII	2 character upper-case ASCII
Program Entry	Keypad or RS232 Serial Interface	Keypad or RS232 Serial Interface Keypad, RS232, or External I/O Interface

H

Operational Flowchart

Run Mode

Power Up Mode and Main Mode of Operation
Allows the user to perform the following:

Allows immediate OPERATIONAL & FUNCTIONAL CONTROL through the keypad using the Run Mode "Function" Command Set

Allows the user to MONITOR Cylinder Position, I/O Status, and/or Function Status from the LCD Screen

Allows ACCESS to all other Modes of Operation

RS232

Allows user to communicate with the H3951/H3851 via ASCII Characters over the RS232 Port from a remote host device such as a computer or PLC to perform the following;

- UPLOAD & DOWNLOAD program strings and parameter values
- EXECUTE Programs and Functional Operations
- MONITOR Position and I/O Status

The RS232 Port will operate ONLY in the Run Mode.

System Parameters

A predefined set of commands which allow the user to define the SYSTEM ENVIRONMENT and OPERATING LIMITS of the Control and Cylinder System.

PID (Gain) Parameters

A set of commands which allow the user to OPTIMIZE the system response (for moves) by adjusting the PROPORTIONAL, INTEGRAL, and DERIVATIVE Gains for the Velocity and Position Servo Loops.

Edit Mode

The Edit Mode allows the user to access the Edit Mode Command List to CREATE new programs or EDIT existing programs for execution in the Run Mode.

A PROGRAM consists of a series of Edit Mode Commands denoted a Move Profile and/or a Functional Operation.

Learn Mode

The Learn Mode allows the user to MANUALLY TEACH POSITIONS to the Control by manually jogging the cylinder to desired positions and loading them into a specified program.

Simple Keypad Programming

The keypad with an integral LCD display allows the user to easily enter new programs, view status messages and edit programs stored in the non-volatile memory. Each of the 20 pushbuttons on the keypad have been assigned to a specific role in developing or running a program.

H

RS-232C Serial Interface

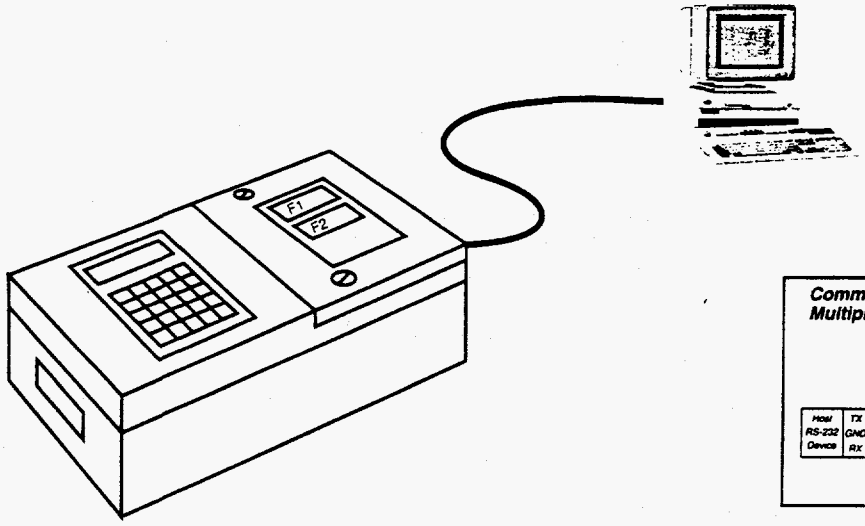

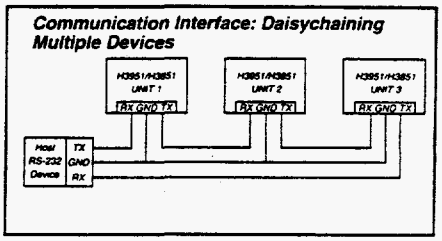

RS-232C Programming

The RS-232C port allows the H3851 and H3951 Controls to communicate to a host device (such as a Computer or PLC) via a 3 wire Serial Interface to UPLOAD and DOWNLOAD programs & parameters and to allow remote functional control.

PROGRAM EXECUTION from the RS-232C port is available on the H3951 ONLY

RS-232C Command Set

Operational Command Set
Used to Upload & Download programs and initiate software control functions.

System Parameter Commands
Used to Configure System Functions

PID Parameter Commands
Used to Configure PID Gains

Edit Mode Commands
Used to Create Programs

(See Command Summary on page 113.)

RS-232C Command Syntax

<a>	ASCII	nnn	<sp>
[device address]	[command]	[parameters]	[delimiter]

<a>	device address	is the unit number of the control from 1 to 99. The Default Address is 1
ASCII	command	is two upper-case ASCII letters (A-Z) denoting a Command function.
nnn	parameters	are optional command specific numbers
<sp>	delimiter	is a SPACE, CARRIAGE RETURN, or LINE FEED

Sample Program

Example: Download a program via the RS-232C port into Program Number 15. An example program may be as follows:

1DL15 AC.5 DE.3 VE95 DA5 GO EN

Where

1DL15	Download Program Number 15
AC.5	Acceleration set for .5 seconds
DE.3	Deceleration set for .3 seconds
VE95	Set speed to 95 percent
DA5	Set absolute distance to 5.000 inches
GO	Execute move to 5 inches and stop
EN	End of program. Save program 15

Shading Key

Highlighted areas denote H3951 ONLY

Denotes H3851 ONLY

1CB

Double Shaft Fully Supported System

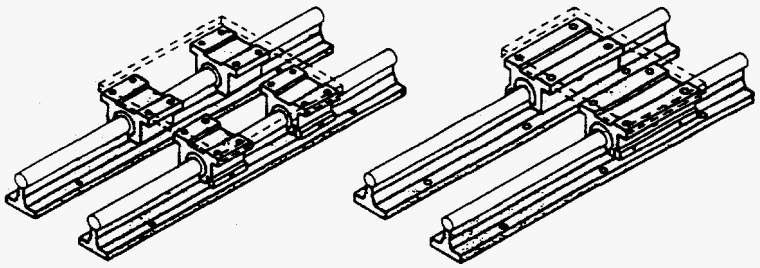

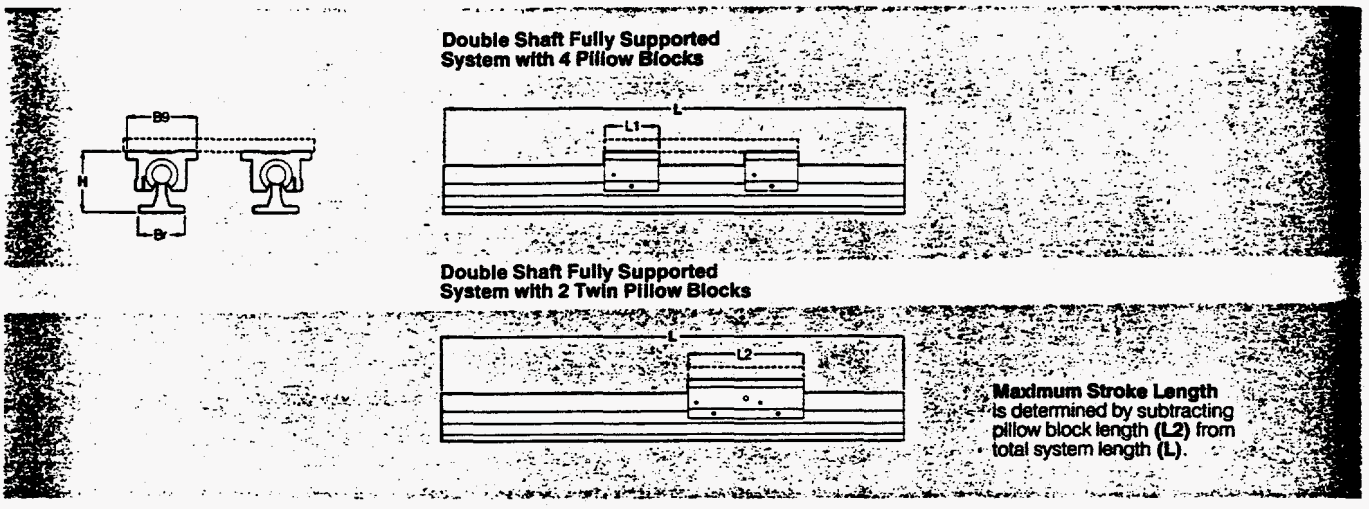

Double Shaft Fully Supported System with 4 Pillow Blocks

Part No.	Nom. Shaft Dia.	Load (lbf)*		Dimension (in.)				Pillow Block	Rail Assembly
		Max. On System	Max. On Any Bearing	L1	H ±0.001	Br	B9		
1CB-08-FAO	1/2	720	180	1.50	1.812	1.50	2.00	SPB-8-OPN-XS	SRA-8-XS
1CB-12-FAO	3/4	1880	470	1.88	2.437	1.75	2.75	SPB-12-OPN-XS	SRA-12-XS
1CB-16-FAO	1	3120	780	2.63	2.937	2.13	3.25	SPB-16-OPN-XS	SRA-16-XS
1CB-24-FAO	1 1/2	6240	1560	3.75	4.250	3.00	4.75	SPB-24-OPN-XS	SRA-24-XS

*Based on a travel life of 2 million inches.

Double Shaft Fully Supported System with 2 Twin Pillow Blocks

Part No.	Nom. Shaft Dia.	Load (lbf)*		Dimension (in.)				Maximum Stroke Length (in.)	Pillow Block	Rail Assembly
		Max. On System	Max. On Any Bearing	L2	H ±0.001	Br	B9			
1CB-08-HAO	1/2	720	180	3.50	1.812	1.50	2.00	L–(3.50)	TWN-8-OPN-XS	SRA-8-XS
1CB-12-HAO	3/4	1880	470	4.50	2.437	1.75	2.75	L–(4.50)	TWN-12-OPN-XS	SRA-12-XS
1CB-16-HAO	1	3120	780	6.00	2.937	2.13	3.25	L–(6.00)	TWN-16-OPN-XS	SRA-16-XS
1CB-24-HAO	1 1/2	6240	1560	9.00	4.250	3.00	4.75	L–(9.00)	TWN-24-OPN-XS	SRA-24-XS

*Based on a travel life of 2 million inches.

System 1CB Standard Lengths

System	8"	12"	16"	18"	20"	24"	28"	30"	32"	36"	40"	42"	44"	48"
1CB-08	■	■	■		■	■	■		■	■	■		■	■
1CB-12		■		■		■		■		■		■		■
1CB-16		■		■		■		■		■		■		■
1CB-24			■			■			■		■			■

Custom Length and Delivery Information

Systems ordered in standard lengths are typically shipped in one week. Custom length systems are available and require two to three weeks for delivery. Lengths exceeding 156.00 ins. require butt joints and will need four to six weeks for delivery. For special requirements, please contact the Thomson **Systems** application engineering department.

System 1CB Benefits:

- Allows for custom table applications.
- Fully supported shafts increase rigidity.
- Double shaft configuration resists torque.
- Allows for unlimited system length.

System 1CB Components:

- 4 Super Open Ball Bushing Bearing Pillow Blocks or 2 Super Twin Open Ball Bushing Bearing Pillow Blocks
- 2 60 Case Inner Races
- Aluminum Shaft Support Rails

Specifying a Thomson System:

1. Determine the proper shaft diameter for your load and life requirements. **2.** Select the part number that corresponds to the shaft diameter. **3.** Add the letter "L" followed by the overall length in inches, as a suffix to the part number (choosing a standard length will reduce costs and speed delivery). **4.** Place your order with your local authorized Thomson distributor.

Part Numbering System

1CB-12-FAO L24

- System Designation
- Shaft Diameter
- Type of Bearing Block
- Type of Support
- Shaft Length

Type SPB-OPN Super Ball Bushing Bearing Pillow Block

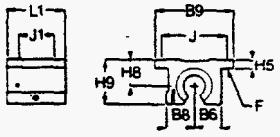

Type TWN-OPN Twin Open Pillow Block

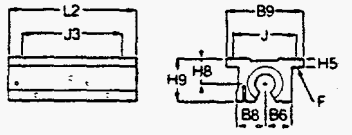

Type SRA Aluminum Shaft Support Rail Assembly

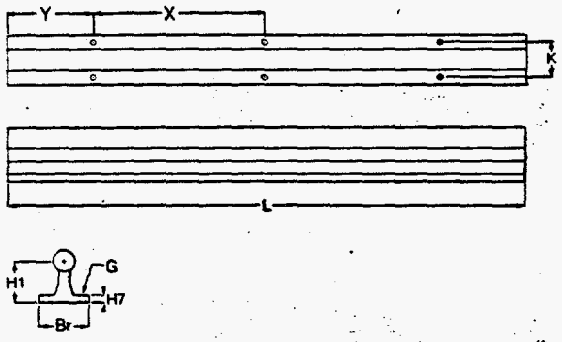

Type SPB-OPN Super Ball Bushing Bearing Pillow Block

Part No.	Nom. Shaft Dia.	Dimension (in.) L1	H9	H8 ±0.001	H5	B9	B8	B6	J	J1	F Bolt	F Hole	Wt. (lb.)
SPB-8-OPN-XS	1/2	1.50	1.12	0.687	0.25	2.00	0.75	0.69	1.69	1.00	#6	0.16	0.20
SPB-12-OPN-XS	3/4	1.88	1.56	0.937	0.31	2.75	1.00	0.94	2.38	1.25	#8	0.19	0.50
SPB-16-OPN-XS	1	2.63	2.00	1.187	0.38	3.25	1.25	1.19	2.88	1.75	#10	0.22	1.00
SPB-24-OPN-XS	1 1/2	3.75	2.94	1.750	0.50	4.75	1.88	1.75	4.12	2.50	1/4"	0.28	3.20

Housing Material: Aluminum Alloy Black Anodized

Type TWN-OPN Twin Pillow Block

Part No.	Nom. Shaft Dia.	Dimension (in.) L2	J3	Wt. (lb.)
TWN-8-OPN-XS	1/2	3.50	2.50	0.40
TWN-12-OPN-XS	3/4	4.50	3.50	1.00
TWN-16-OPN-XS	1	6.00	4.50	2.00
TWN-24-OPN-XS	1 1/2	9.00	6.50	6.70

Housing Material: Aluminum Alloy Black Anodized

Type SRA Aluminum Shaft Support Rail Assembly

Part No.	Nom. Shaft Dia.	Dimension (in.) H1 ±0.001	H7	Br	K	X	Y	G Bolt	G Hole	Weight (lb.)
SRA-8-XS	1/2	1.125	0.19	1.50	1.00	4.00	2.00	#6	0.17	1.26
SRA-12-XS	3/4	1.500	0.25	1.75	1.25	6.00	3.00	#10	0.22	2.50
SRA-16-XS	1	1.750	0.25	2.13	1.50	6.00	3.00	1/4"	0.28	4.06
SRA-24-XS	1 1/2	2.500	0.38	3.00	2.25	8.00	4.00	5/16"	0.34	8.60

Support rail material: Aluminum Alloy Black Anodized
Base mounting holes are within ±0.010", Noncumulative

Maximum length of Aluminum Shaft Support Rails is 24". If longer continuous one-piece Shaft Support Rails are required, contact the Thomson **Systems** application engineering department.

It is the responsibility of the product user to determine the suitability of Thomson Systems for a specific application.

Defective products will be replaced without charge if promptly returned. No liability will be assumed beyond such replacement.

David M. Russell
(214) 708-4410
Superconducting Super Collider Laboratory
Physics Research Department,
2550 Beckleymeade Avenue, MS 2004
Dallas, Texas 75237-3997
FAX: (214) 708-5111

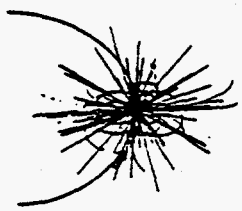

Synchrotron Radiation Detector

June, 14- 1993

ASME Boiler and Pressure Vessel Code
Section 8 Division I

This document logs the procedure for verifying the Synchrotron Radiation Detector, SRD, against the ASME Boiler and Pressure Vessel, BPV, Code. The goal is to have the SRD pass the ASME BPV Code.

U-1(c) - The following classes of vessels are not considered to be within the scope of this Division:

(8) - vessels having an internal or external operating pressure not exceeding 15 psi with no limitations on size.

U-1(k) - Any pressure vessel which meets all of the requirements of this Division, including those for inspection, may be stamped with the Code U Symbol even though exempted from such stamping.

Interp. - The external operating pressure is 14.7 psi and therefore the SRD is exempt from the ASME, BPV, Code. But, if the SRD meets the ASME BPV Code it can be stamped with the Code U symbol.

U28-(f) - Vessels intended for service under external working pressure of 15 psi or less, which are to be stamped with the Code symbol denoting compliance with the rules for external pressure, shall be designed for a maximum allowable working pressure of 15 psi or 25% more than the maximum possible external pressure, whichever is smaller.

Interp. - Design the SRD for an external pressure of 15 psi (103.42 kPa).

UG-16(b) - The minimum thickness of shells and heads is 1/16 in. (1.5875 mm). (Summary)

Table UHA-23 - Seamless Pipe, 304L Stainless Steel (SA-312).

Specified Min. Yield	25 ksi
Specified Min. Tinsile	70 ksi
Maximum Allowable Stress	16.7 ksi

Note: Due to the relatively low yield strength of these materials, these higher stress values were established at temperatures where the short time tinsile properties govern to permit the use of these alloys where slightly greater deformation is acceptable. These higher stress values exceed 2/3 but do not exceed 90% of the yield strength at temperature. Use of these stress values may result in dimensional changes due to permanent strain. These stress values are not recommended for flanges of gasketed joints or other applications where slight amounts of distortion can cause leakage or malfunction.

Intrp. - Use conservative maximum allowable stress of 12 ksi, (82.7 MPa).

UG-23(b) - The maximum allowable longitudinal compressive stress is the smaller of;

(1) - The maximum allowable tensile stress from **Table UHA-23**, (16.7 ksi).

(2) - The computed value of B from **FIG. 5-UHA-28.3**.

$$A = \frac{0.125}{R_o / t} \qquad (1)$$

Where, R_o = 6.375 in, t=0.134 in, and E=28x10^6 psi. Therefore, A=0.00263 and from **FIG. 5-UHA-28.3**, B=11.0 ksi.

Intrp. - Use maximum allowable longitudinal compressive stress of 11.0 ksi. (75.8 MPa).

UG-28 - Thickness of shells and tubes under external pressure.

L=15.82 in (401.8mm)	D_O=12.75 in.	t=0.134in
L/D_O=1.24	D_O/t=95.15	
A=0.0012	(From **FIG. 5-UGO-28.0**)	
B=9 ksi	(From **FIG. 5-UHA-28.3**)	
E=28x10^6 psi	Modulus of Elasticity	
P=15 psi	Design Pressure	

Determine the external working pressure using,

$$P_a = \frac{4B}{3D_0 / t} \qquad (2)$$

For t=0.18 in. the working pressure, P_a, is 126 psi.

If t=1/16in. the working pressure, P_a, is 68 psi.

Intrp. - The current design thickness is more than sufficient. (Assuming the stresses are less than the allowable stress.)

UG-34 - The minimum thickness of flatheads and covers is defined by,

$$t = d\sqrt{CP / SE + 1.9Wh_G / SEd^3} \qquad (3)$$

Where,

d=9.12 in.	Diameter as indicated in **Fig. UG-34**	
C=0.30	Attachment Factor	
P=15 psi	Design Pressure	
S=12 ksi	Allowable Stress	
E=1.0	Joint Efficiency of Welds.	
W=7800	Total Bolt Load	***Assumed***
h_G=0.56in.	Dimension as indicated in **Fig. UG-34**	

then, the minimum thickness is .327 in (8.3 mm). The minimum thickness of the coverplate in the gasket region is given by,

$$t = d\sqrt{1.9Wh_G / Sd^3} \qquad (4)$$

which yields a minimum thickness of .275 in (7.0 mm).

Intrp. - The minimum thickness of the head is .327 in (8.3 mm) and the minimum thickness in the gasket region is .275 in (7.0 mm).

UG-36(b)(1) - Rules UG-36 through UG-43 and supplemental rules 1-7 apply to openings in vessels 60 in. in diameter and less, exceeding one-half the vessel diameter, but not exceeding 20 in. (Summary)

UG-36(c)(3)(a) - Openings in vessels not subject to rapid fluctuations in pressure do not require reinforcement if not larger than 3 1/2 in. in vessel shells or heads 3/8 in. or less in thickness or 2 3/8 in. diameter in vessel shells or heads over 3/8 in. in thickness.

Intrp. - The large hole may need reinforcing but the small holes in the head and the shell are exempt.

UG-37(d)(1) - The reinforcement required for openings in single-walled vessels subject to external pressure need be only 50% of.

$$A = dt_r F + 2t_n t_r F(1 - f_{r1}) \qquad (5)$$

where,

d=7.891 in.	Diameter of Circular Opening
t_r=1/16 in.	Require Thickness of Shell *Assumes Stress is OK*
F=1.0	Correction Factor
t_n=0.109 in.	Nominal Thickness of Nozzle Wall
f_{r1}=1.0	Nozzle Attachment Factor

yields a required reinforcing area of .2466 in^2. The area available in the shell for reinforcement is computed to be .5642 in^2. The current design also complies with rules UG-36 through UG-43 and the supplemental rules in 1-7.

Intrp. - The thickness of the shell is sufficient to provide the required reinforcement to the opening. Therefore no additional material is required.

UG-54(b) - **Appendix** G contains suggested rules for the design of supports.

UG-101 - Proof tests to establish maximum allowable working pressure.

G-6 - Horizontal vessels may be supported by means of saddles or equivalent leg supports. For other than very small vessels, the bearing afforded by the saddles shall extend over at least one-third of the circumference of the shell.

Stress - From Roark's Formulas for Stress & Strain;

$$\sigma_1 = P/t \qquad \text{Longitudinal Stress} \qquad (6)$$

$$\sigma_2 = qR/t \qquad \text{Circumferential Stress} \qquad (7)$$

Where, P is the end load and q is the uniform pressure. The values of these are far below the allowable stress. σ_1=524 psi. This doesn't account for loads other than the external pressure, but indicates that the stresses in the vessel will be far below the allowable stress.

ANSYS - The SRD was modeled using STIF63 shell elements, with conservative force estimates applied. The resulting maximum stress was 11.6 ksi, which is less than the 12 ksi allowable stress. The resulting maximum longitudinal compressive stress was 9.58 ksi, which is less than the allowable of 11 ksi. The resulting maximum von Misis stress was 12.85 ksi, which is slightly above the allowable stress, but, this is at a stress concentration (the edge of the support). The other maximums are also at the same stress concentration. If this node is not considered then the maximum von Misis stress is 6.86 ksi. (This is an allowable practice according to the code.) These are the values at either the top or bottom of the shells. The maximum von Misis stress at the middle of the shells is 5.20 ksi, which is all that is required by the code. If the von Misis stress is less than the allowable stress than all of the stress components will be less than the allowable stress.

Intrp. - The stresses in the SRD are less than half of the allowable stress and therefore the SRD can receive the code stamp.

Conclusion - The SRD easily passes all the criteria of the ASME Boiler and Pressure Vessel Code and can be stamped with the Code U symbol.

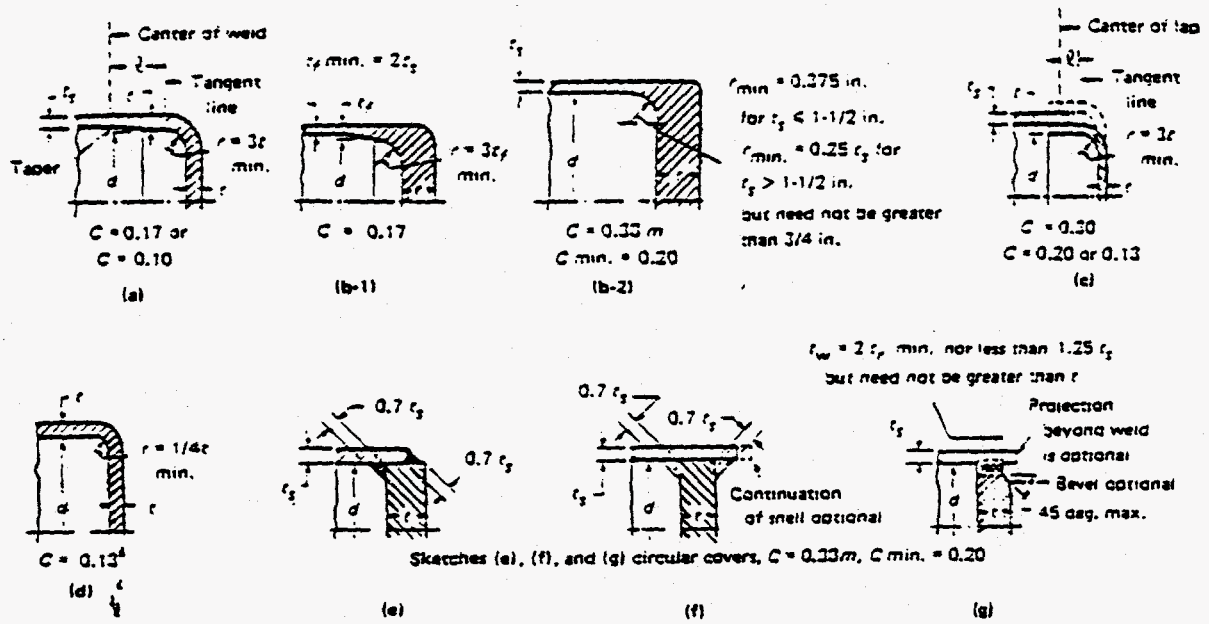

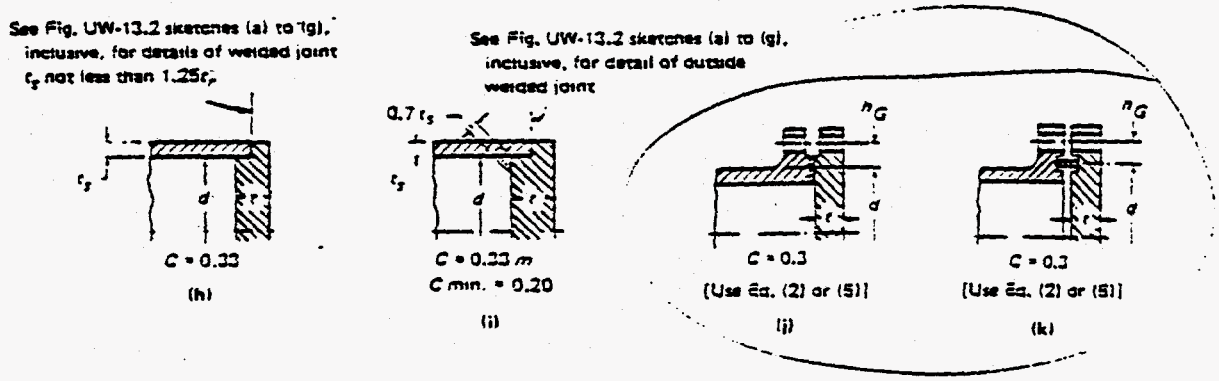

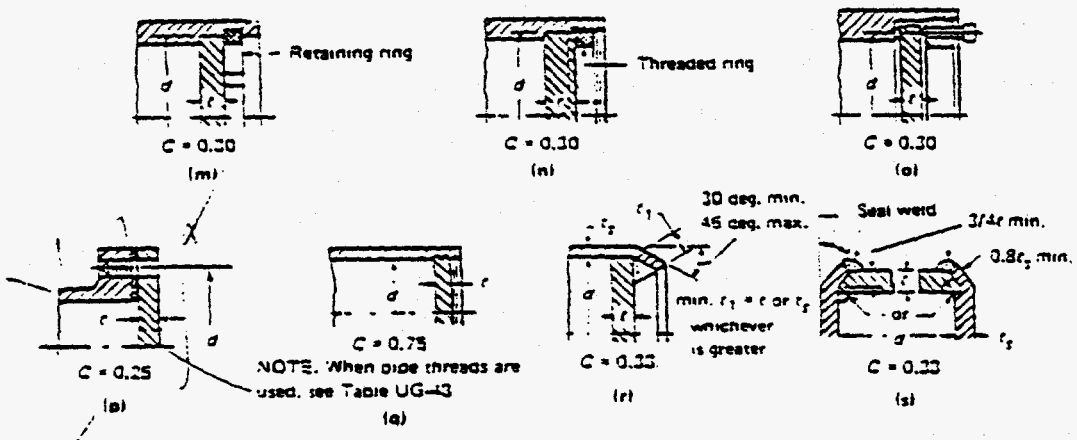

FIG. UG-34 SOME ACCEPTABLE TYPES OF UNSTAYED FLAT HEADS AND COVERS
The Above Illustrations Are Diagrammatic Only. Other Designs That Meet the Requirements of UG-34 Are Acceptable.

TABLE UHA-23 (CONT'D)
MAXIMUM ALLOWABLE STRESS VALUES IN TENSION FOR HIGH ALLOY STEEL
(CAUTION: See UW-12 for vessels constructed under Part UW)

ALLOY STEEL
UW)

Nominal Composition	UNS No.	P-No.	Group No.	Product Form	Spec. No.	Grade	Notes	Specified Min. Yield, ksi	Specified Min. Tensile, ksi	T(°F) -20 to 100	Spec. No.	Ext. Press. Chart Fig. No.
17Cr	S43000	7	2	Bar	SA-479	430	(7)(14)				SA-479	
18Cr-Ti	S43035	7	2	Bar	SA-479	XM-8	(7)(14)	40	70	17.5	SA-479	5-UHA-28.2
17Cr-4Ni-6Mn	S20100	8	3	Plate	SA-412	201	. . .	45	95	23.8	SA-412	5-UCS-28.2
17Cr-4Ni-6Mn	S20100	8	3	Plate	SA-240	201-1	. . .	38	95	22.5	SA-240	
17Cr-4Ni-6Mn	S20100	8	3	Plate	SA-240	201-1	(1)	38	90	22.5	SA-240	5-UCS-28.2
17Cr-4Ni-6Mn	S20100	8	3	Plate	SA-240	201-2	. . .	45	95	23.8	SA-240	
17Cr-4Ni-3Cu	. . .	. . .	. . .	Cast.	SA-747	CB7Cu-1	(6)(16)	140	150	28.0	SA-747	5-UCS-28.2
18Cr-8Ni	S30403	8	1	Forg.	SA-182	F304L	(1)	25	65	16.3	SA-182	5-UHA-28.3
18Cr-8Ni	S30403	8	1	Plate	SA-240	304L	(1)				SA-240	
18Cr-8Ni	S30403	8	1	Smls. Tb.	SA-213	TP304L	(1)				SA-213	
18Cr-8Ni	S30403	8	1	Smls. Pp.	SA-312	TP304L	(1)	25	70	16.7	SA-312	5-UHA-28.3
18Cr-8Ni	S30403	8	1	Bar	SA-479	304L	(1)(14)				SA-479	
18Cr-8Ni	S30403	8	1	Fittings	SA-403	304L WPS	(1)	25	65	15.7	SA-403	NA
18Cr-8Ni	S30403	8	1	Plate	SA-240	304L	. . .	25	70		SA-240	
18Cr-8Ni	S30403	8	1	Smls. Tb.	SA-213	TP304L	. . .	25	70		SA-213	
18Cr-8Ni	S30403	8	1	Smls. Pp.	SA-312	TP304L	. . .	25	70		SA-312	
18Cr-8Ni	S30403	8	1	Forg.	SA-182	F304L	. . .	25	65	16.3	SA-182	5-UHA-28.3
18Cr-8Ni	S30403	8	1	Forg.	SA-336	304L	. . .	25	65		SA-336	
18Cr-8Ni	S30403	8	1	Bar	SA-479	304L	(14)	25	70		SA-479	
18Cr-8Ni	S30403	8	1	Wld. Tb.	SA-249	TP304L	(1)(4)				SA-249	
18Cr-8Ni	S30403	8	1	Wld. Pp.	SA-312	TP304L	(1)(4)	25	70	14.2	SA-312	5-UHA-28.3
18Cr-8Ni	S30403	8	1	Wld. Tb.	SA-688	TP304L	(1)(4)				SA-688	
18Cr-8Ni	S30403	8	1	Fittings	SA-403	304L CR	(1)(4)					
18Cr-8Ni	S30403	8	1	Fittings	SA-403	304L WP-W	(1)(4)	25	65	13.3	SA-403	NA
18Cr-8Ni	S30403	8	1	Fittings	SA-403	304L WP-WX	(1)(4)					
18Cr-8Ni	S30403	8	1	Wld. Tb.	SA-249	TP304L	(4)				SA-249	
18Cr-8Ni	S30403	8	1	Wld. Pp.	SA-312	TP304L	(4)	25	70	14.2	SA-312	5-UHA-28.3
18Cr-8Ni	S30403	8	1	Wld. Tb.	SA-688	TP304L	(4)				SA-688	
18Cr-8Ni	J92500	8	1	Cast.	SA-351	CF3	(1)(6)	30	70	17.5	SA-351	5-UHA-28.3
										17.5	SA-351	5-UHA-28.1

A90

A-36

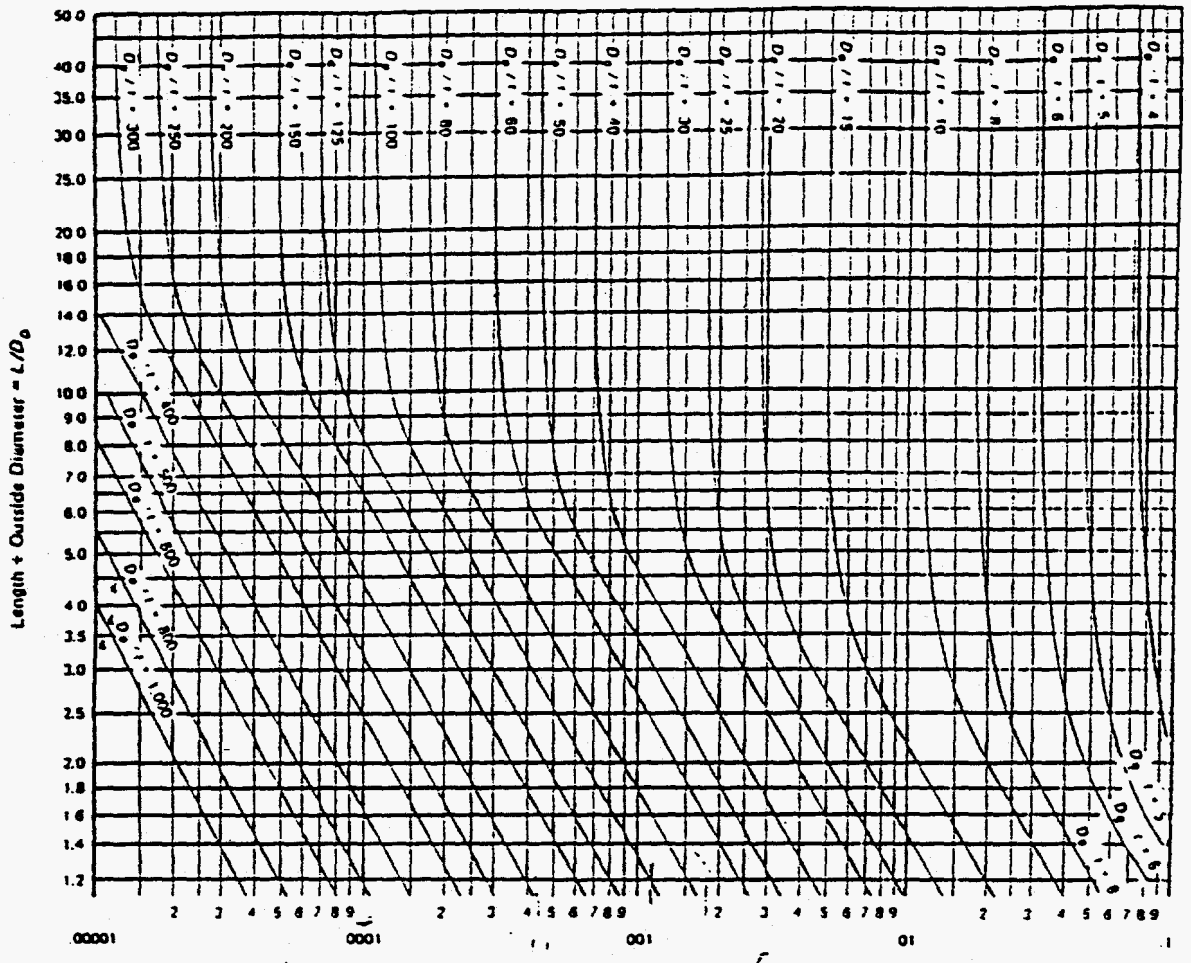
Length ÷ Outside Diameter = L/D_o
50.0
40.0
35.0
30.0
25.0
20.0
18.0
16.0
14.0
12.0
10.0
9.0
8.0
7.0
6.0
5.0
4.0
3.5
3.0
2.5
2.0
1.8
1.6
1.4
1.2
2 3 4 5 6 7 8 9
.00001
0001
001
01
1
FACTOR A

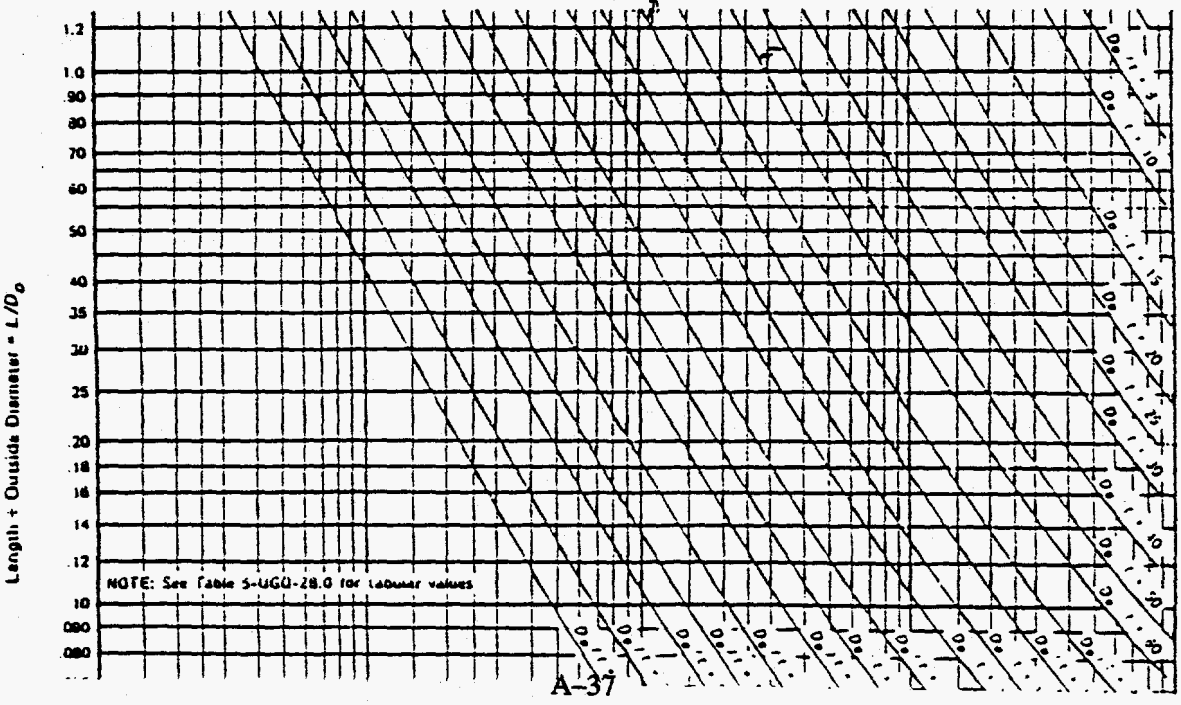
Length ÷ Outside Diameter = L/D_o
1.2
1.0
.90
.80
.70
.60
.50
.40
.35
.30
.25
.20
.18
.16
.14
.12
.10
.090
.080
NOTE: See Table 5-UGO-28.0 for tabular values.

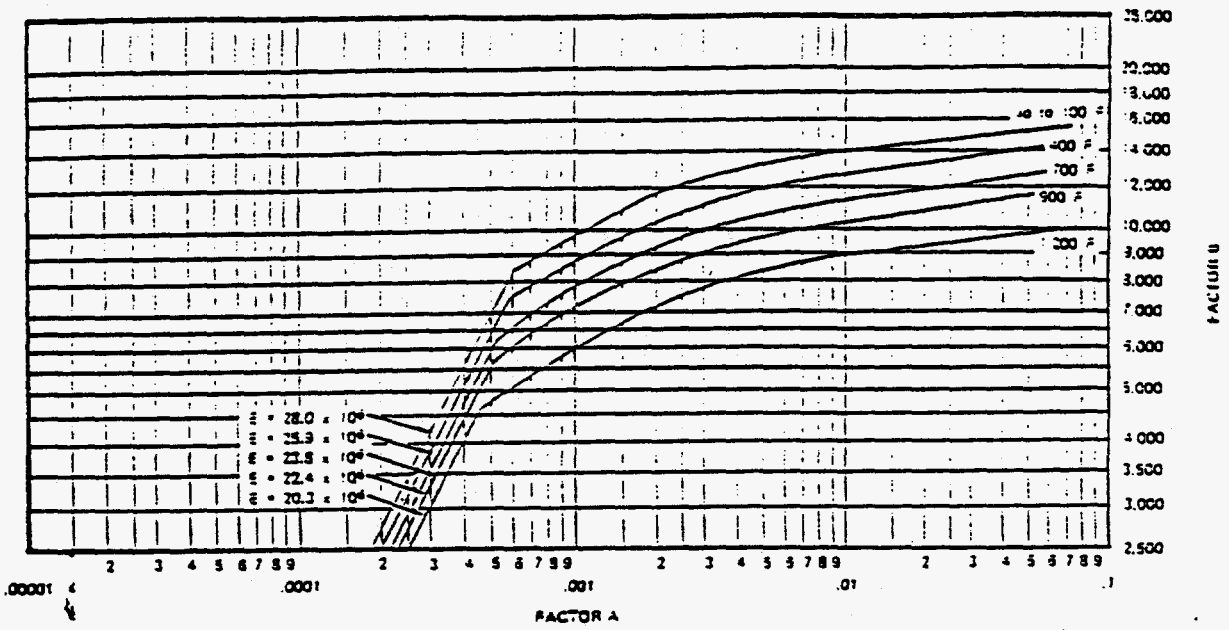

FIG. 5-UHA-28.2 CHART FOR DETERMINING SHELL THICKNESS OF CYLINDRICAL AND SPHERICAL VESSELS UNDER EXTERNAL PRESSURE WHEN CONSTRUCTED OF AUSTENITIC STEEL [18Cr–8Ni–Mo, TYPE 316; 18Cr–8Ni–Ti, TYPE 321; 18Cr–8Ni–Cb, TYPE 347; 25Cr–12Ni, TYPE 309 (THROUGH 1100°F ONLY); 25Cr–20Ni, TYPE 310; AND 17Cr, TYPE 430B STAINLESS STEEL (THROUGH 700°F ONLY)] [NOTE (8)]

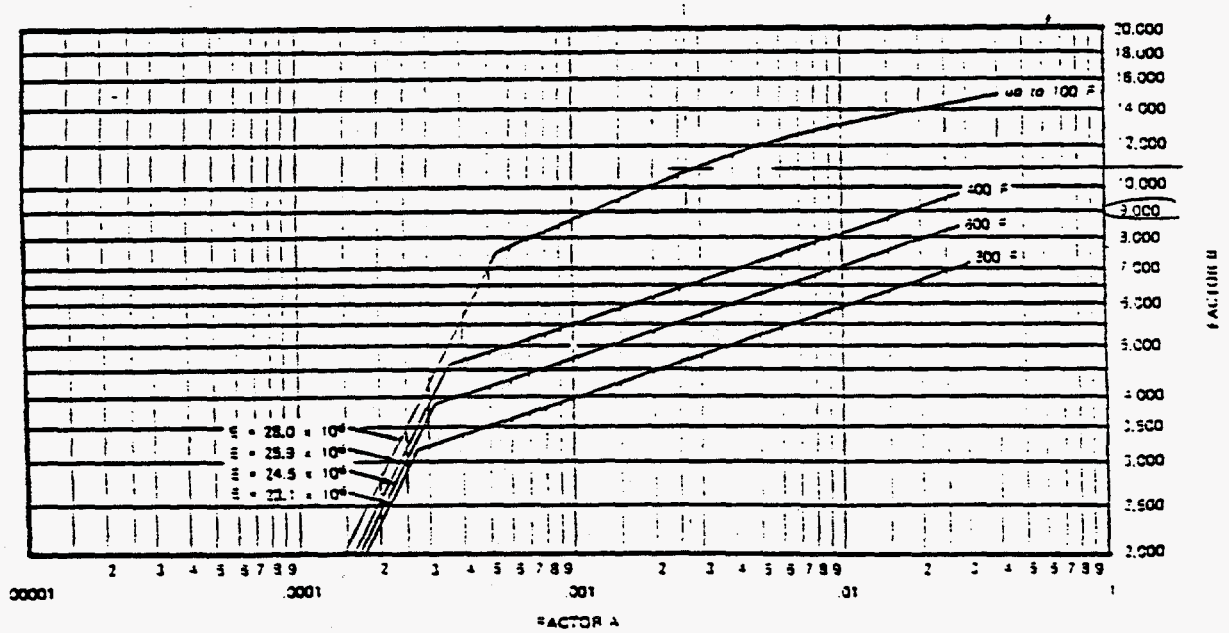

FIG. 5-UHA-28.3 CHART FOR DETERMINING SHELL THICKNESS OF CYLINDRICAL AND SPHERICAL VESSELS UNDER EXTERNAL PRESSURE WHEN CONSTRUCTED OF AUSTENITIC STEEL (18Cr–8Ni–0.03 MAXIMUM CARBON, TYPE 304L) [NOTE (8)]

VACUUM VESSEL SAFETY
(Formerly Fermilab Engineering Standard SD-41)

INTRODUCTION

Vacuum vessels such as insulating vacuums on dewars and vacuum chambers under vacuum pose a potential hazard to equipment and personnel from rupture or implosion. This chapter specifies the procedure to be followed in designing, fabricating, testing, and using vacuum vessels in order to reduce hazards. This chapter applies to any vessel used at Fermilab except:

a. any vacuum vessel whose inside diameter or cross section diagonal is under twelve inches with no limitation of length.

b. any portions of beam pipes buried underground.

c. any vessel with a volumetric capacity of less than 35 cubic feet.

d. any vessel under external pressure whose product P x V is less than 515 (psi) (cu. ft.), where P is the external differential MAWP and V is the volumetric capacity.[1]

DEFINITIONS

The Code -ASME Section VIII Divisions 1 and 2. The revision of the Code to be applied to a given vessel is the latest revision at the time of the vessel's fabrication.

Vacuum Vessel - any vessel having atmospheric pressure outside the vessel and a pressure less than atmospheric inside the vessel.

Engineering Note - a written analysis demonstrating that a given vessel satisfies the requirements of this chapter.

Volumetric Capacity - the volume of water the vessel can hold or store. (If another vessel or object is contained inside the vacuum vessel, the object's volume should be subtracted out)

SPECIAL RESPONSIBILITIES

The division/section head who controls the area of operation of the vessel is responsible for carrying out the requirements of this chapter. He shall arrange for the review of the Engineering Note by a qualified person. He shall certify vessel compliance with this chapter by signing the Engineering Note and shall maintain an open, updated file on all vacuum vessels located in his areas of operation. After certification, the Fermilab engineering standard conformance label shall be attached to the vessel. The original of the Engineering Note shall be placed into the Laboratory Vacuum Vessel master file maintained by the ES&H Section.

The ES&H Section shall audit the divisions and sections on their compliance to this chapter.

---

[1]This pressure volume product is equivalent to the vessel energy requiring a pressure vessel engineering note from Lawrence Livermore National Laboratory's Health and Safety Manual and Mechanical Engineering Design Safety Standards.

provisions of this chapter. Exceptions are to be identified and submitted to the Director for review as early in the design process as possible. These exceptions shall only be allowed after the Director has assured himself that sound engineering practice will be followed during design, fabrication and test of the vessel. The ES&H Section shall maintain copies of exceptions for the Director. An exceptional vessel is hereby defined as one which cannot meet the tenets of this chapter and therefore requires a Director's Exception.

6. A technical appendix describing procedures for an Engineering Note analysis is included.

The Mechanical Safety Subcommittee and/or Cryogenic Safety Subcommittee shall serve the division/section heads and ES&H Section in a consulting capacity on all vacuum vessel matters. These committees may propose appropriate modifications to this chapter as necessary. Changes in policy and responsibility shall be recommended by the Laboratory Safety Committee after consulting with the division/section heads. Changes in procedure shall be recommended by the Mechanical Safety Subcommittee and/or Cryogenic Safety Subcommittee.

PROCEDURE

Fermilab's contract with the Department of Energy stipulates that Fermilab conform to the current DOE 6430.1 standard. This standard includes the A.S.M.E. Pressure Vessel Code. The A.S.M.E. Code does not apply to vacuum vessels, but nevertheless we shall adhere to it to the extent practical for vacuum vessels in a laboratory environment. The design criterion for vacuum vessels at Fermilab shall be a minimum collapse pressure equal to 30 psid or 4 times the maximum external differential pressure, whichever is smaller.[2]

Implementation of Procedure

1. *Preparation of Engineering Note*: An Engineering Note shall be prepared by an engineer or designer for all existing or new operational vacuum vessels at Fermilab; whether purchased, in-house built, an experimenter's vessel, a used vessel, or located in an unmanned area. The format of the Engineering Note is shown in Exhibit A-1. Its purpose is to allow a reviewer to check the design and installation and to inform a future user of the vessel parameters. The Engineering Note shall include design calculations for in-house built vessels and experimenter built vessels, and the manufacturer's data reports for purchased vessels if available. The Note shall also include precautions and operating procedures necessary for the safe use of the vessel.

2. *Review of Engineering Note:* All vacuum vessel Engineering Notes shall be reviewed by an independent, qualified reviewer, other than the engineer or designer who prepared it, for concurrence to this chapter. The reviewer shall be from a group not reporting to the preparer of the Engineering Note or his supervisor.

3. *Amendment of Engineering Note:* Any subsequent changes in usage, operating temperature, valving, etc., which could affect the safety of the vessel requires an amendment to the original Engineering Note. This amendment shall be reviewed in the same manner as the original Note.

4. *Similar Vessels:* Vacuum vessels which are similar to previously constructed and approved vessels need not have the full engineering analysis repeated. Adequate documentation can be provided by referencing the approved engineering analysis and noting any differences. Acceptance testing will still be required. For the purposes of this paragraph, similar vessels mean that the same kinds of materials and construction techniques are used and similar operating parameters will be used. The geometry must be similar, however, this paragraph may be applied if geometry differences do not affect the engineering analysis or safety.

5. *Director's Exception:* Exceptions to the provisions of this chapter shall be allowed only with the signature of the Laboratory Director or his designee documented in the Engineering Note. The need for such exceptions is to be minimized by adherence to the

[2] The Compressed Gas Association uses the A.S.M.E. Pressure Vessel Code as a guide for designing vacuum vessels for a minimum collapsing pressure of 30 psi differential. See Pamphlet CGA-341.

FAX

January 14, 1994

TO: Dan Hutton, MS2000

FROM: John Harrop, John Crane Belfab

Subject: Radiation Detector Bellows

Ref: P/N R70-000006 & R70-000007

I have gathered together as much of the information that I could find in my files regarding the subject project and have attached what I think is the best data as to our final discussions on the application.

As I recall the small bellows was settled with our first proposal and that we were working on the larger bellows to make sure that the springrate was low enough to be compatible with you drive system.

Please review the attached data and if you have any questions just give me a call.

JSH

Date -- *BELCALX2* Quote No. 305-200

****

Bellows O.D.------	13.900	Die # T-	19255	Thickness(Per Ply)	0.005
Bellows I.D.------	12.600	Material		Die Pitch --------	0.12
O.D. Flats -------	0.100			No. of Conv's.----	50
I.D. Flats -------	0.100			Ripple Depth -----	0.014

Max. Comp.(-) or Ext.(+) Stroke ----	-1.9
Min. Comp.(-) or Ext.(+) Stroke ----	1.9
Press.,Max. Comp.(- for Ext dP) ----	-15
Press.,Min. Comp.(- for Ext dP) ----	-15

****

FUNCTIONAL DATA

SPRING RATE ----------	13.990
EFFECTIVE AREA ----------	137.852
FREE LENGTH ----------	7.000
SOLID HEIGHT (3.2nt) ------	1.600
STROKE/PSI ----------	9.854
SQUIRM PRESSURE @ F.L.-----	11.726 — looks low
BELLOWS WEIGHT (STN STL) --	7.846
TWIST (ARC-SEC / IN-OZ) ---	0.002
SHEAR STRESS (PSI / IN-LB)-	0.802
MAX LATERAL OFFSET --------	1.660
LATERAL SPRING RATE -------	75.555
NATURAL FREQUENCY ---------	13.086

****

STRESSES

DEFLECTION

O.D. MAX -----	-1994
O.D. MIN -----	1994
I.D. MAX -----	-2134
I.D. MIN -----	2134

PRESSURE

O.D. MAX -----	-25527
O.D. MIN -----	-25527
I.D. MAX -----	27321
I.D. MIN -----	27321

COMBINED

O.D. MAX -----	-27521
O.D. MIN -----	-23532
I.D. MAX -----	50374
I.D. MIN -----	58912

CYCLIC

O.D. MEAN ----	-25527
O.D. ALT -----	-1994
I.D. MEAN ----	54643
I.D. ALT -----	-4269

08-30-93 08:33AM P03

Bellows O.D.	7.625	Thickness	0.006
Bellows I.D.	6.625	Die Pitch	0.08
O.D. Flats	0.045	No. of Conv's.	50
I.D. Flats	0.045	Ripple Depth	0.025

Max. Comp.(−) or Ext.(+) Stroke	−1.75
Min. Comp.(−) or Ext.(+) Stroke	1.75
Press.,Max. Comp.(− for Ext dP)	−15
Press.,Min. Comp.(− for Ext dP)	−15

FUNCTIONAL DATA

SPRING RATE	18.61520
EFFECTIVE AREA	39.66116
FREE LENGTH	~~4.6~~ 4.50
SOLID HEIGHT (3.2nt)	0.96
STROKE/PSI	2.141322
SQUIRM PRESSURE @ F.L.	22.64813
BELLOWS WEIGHT (STN STL)	1.947262
TWIST (ARC−SEC / IN−OZ)	0.006428
SHEAR STRESS (PSI / IN−LB)	2.416891
MAX LATERAL OFFSET	1.190979
LATERAL SPRING RATE	67.46912 ← decrease by adding more convolutions
NATURAL FREQUENCY	30.30035

STRESSES

DEFLECTION

O.D. MAX	−6540
O.D. MIN	6540
I.D. MAX	−7338
I.D. MIN	7338

PRESSURE

O.D. MAX	−23769
O.D. MIN	−23769
I.D. MAX	26672
I.D. MIN	26672

COMBINED

O.D. MAX	−30309
O.D. MIN	−17230
I.D. MAX	38666
I.D. MIN	68020

CYCLIC

O.D. MEAN	−23769
O.D. ALT	−6540
I.D. MEAN	53344
I.D. ALT	−14676

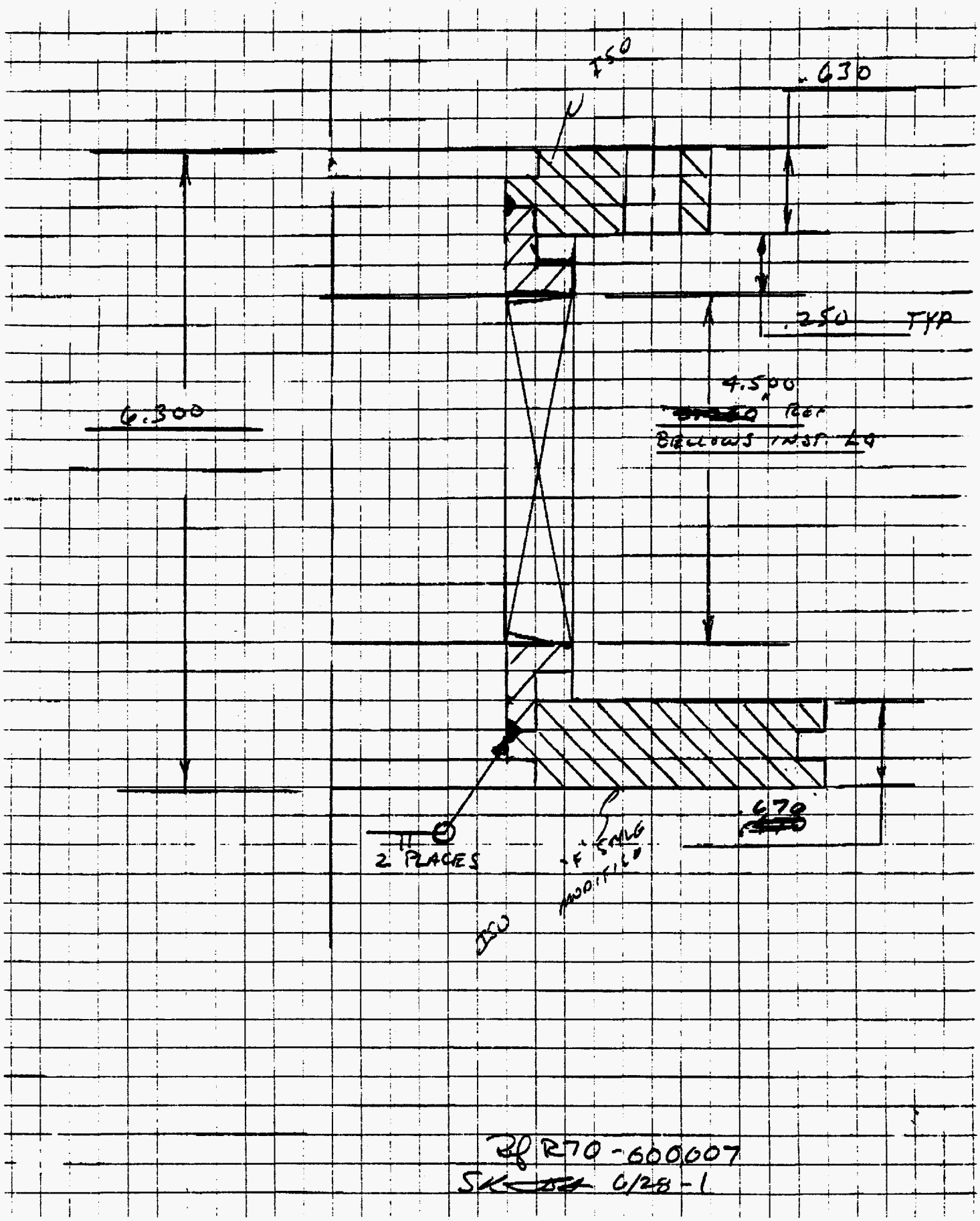

Ref R70-600607
SK 0/28-1

FAX TRANSMITTAL SHEET PAGE 1 of 2

JOHN CRANE BELFAB
CENTRAL REGIONAL OFFICE
262 Hawthorn Commons, Suite 325
Vernon Hills, IL 60061
FAX: 708-680-0346
PH: 708-284 8389

TO: DAN HUTTON
MS 2000
SSCL PHYSICS RES. DIV.
DALLAS, TX
214-709·6354

DATE: 9/7/93

REVISED DESIGN FOR LARGE BELLOWS ATTACHED. WE HAVE A NEW SIZE DIE, 12.6" X 13.9". WE'LL USE 2PLY .005 MATERIAL. NEW LATERAL SPRING RATE 75 lb/in WELL WITHIN THE TARGET, THIS DESIGN IS MORE IN LINE WITH YOUR ORIGINAL SIZES.

I WILL HAVE BALLPARK PRICES FOR YOU SHORTLY.

JOHN HARROP

09-14-94 04:30PM FROM FAX# 708 680 0346 305

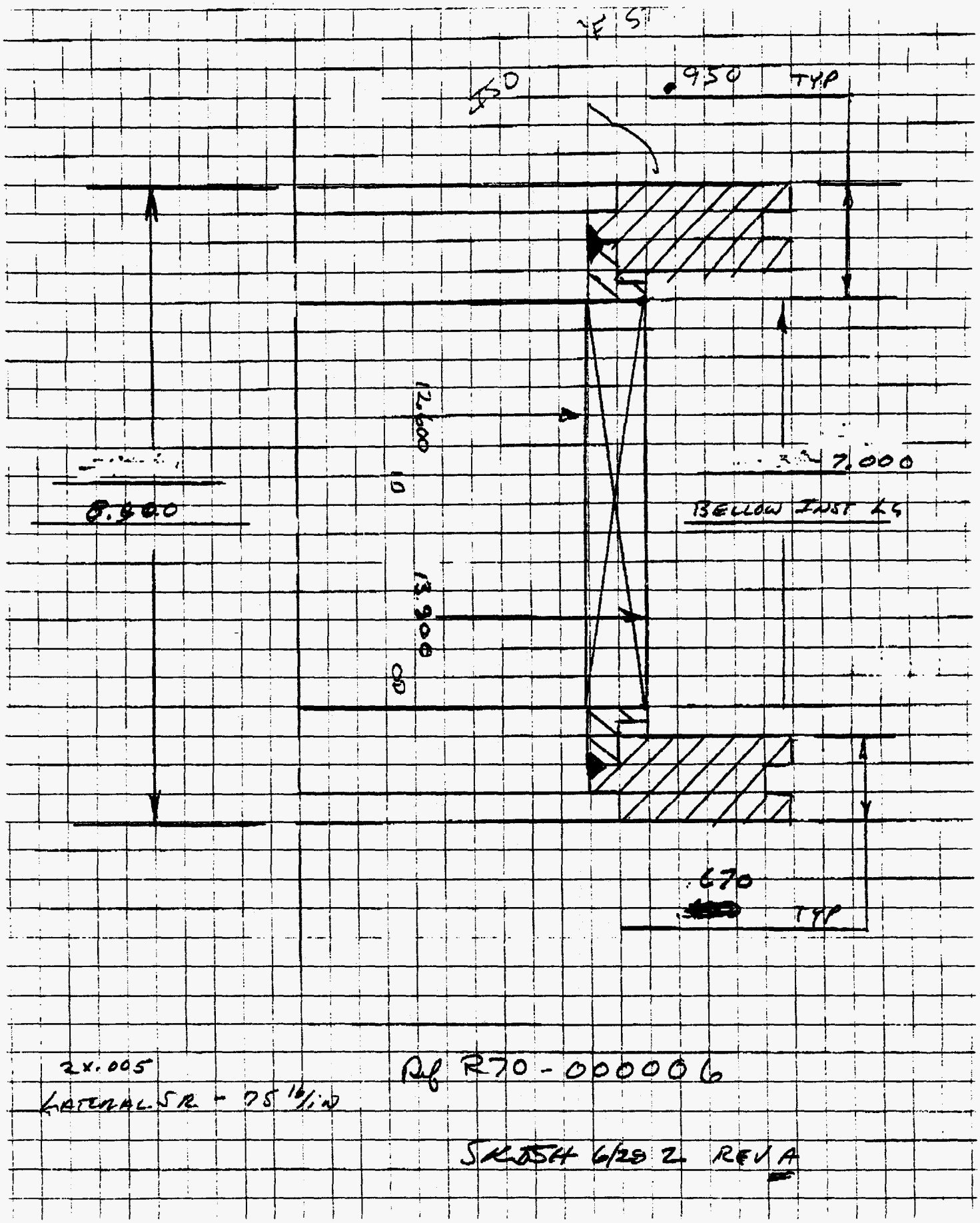

.950 TYP
12.600
13.900
7.000
BELLOW INST LG
8.500
.670
TYP
2x.005
LATERAL SR - 75 lb/in
Ref R70-000006
SKJSH 6/28 2 REV A

SYNCHROTRON RADIATION DETECTOR
Directory Location - /home/nova/prd/kelly/vacuum

----------DETAIL FILES----------

File	Description
R70_000006	Bellows Flange Assembly
R70_000007	Bellows Flange Assembly
R70_000008	Vessel Tee Weldment
R70_000009	Flange, Reducing
R70_000010	Flange, PMT, Modification
R70_000011	Bracket, SRD Crystal
R70_000012	Bracket, Scintillator
R70_000013	Flange, PMT
R70_000014	NAI Crystal Assembly
R70_000015	Scintillator Crystal Assembly
R70_000016	Detector Sub-Assembly
R70_000017	Synchrotron Radiation Detector
R70_000018	Base Weldment
R70_000019	Flange, ISO200, Modified
R70_000020	Vessel Weldment Sub-Assembly
R70_000021	Scintillator Plastic
R70_000022	Crystal, NaI
R70_000023	Light Pipe Transition, Scintillator
R70_000024	Light Pipe Transition, SRD
R70_000025	Flange, PMT Weldment
R70_000026	Leveling Bolt, Internal Wrenching
R70_000027	Plate, Leveling Table
R70_000028	Clevis, Actuator
R70_000029	Base Support, Weldment
R70_000030	Spacer, Drive Motor
R70_000031	Plate, Leveling

----------SOLID MODELS----------

actuator1.mod	basewld.mod
beampipe.mod	bellow.mod
bellow1.mod	bolt.mod
centr16.mod	centr160.mod
centr200.mod	centr320.mod
clevis.mod	crystal.mod*
crystal1.mod	flgclmp.mod
floorplt1.mod	floorvrt.mod*
glass.mod	glass1.mod*
iso160.mod	iso160blk.mod
iso200.mod	iso200blk.mod
iso320.mod	iso320blk.mod
iso320blk1.mod	iso320h.mod
iso320offh.mod	level.mod
level2.mod	levelassy.ref
lvlr.mod	lvlrplt.mod
mnt.mod	mnt1.mod
nw16.mod	opt1.ref
opt2.ref	oring.mod
pilowblk.mod	pipe.mod
pmt.mod	pmt.ref
pmt1.mod	pmt1.ref
rodend.mod	shield.mod
shldmnt.mod	subassy.ref
support.ref	tassem.ref
vessel.ref	vessel2.mod*
weldmnt1.ref	weldmnt2.ref

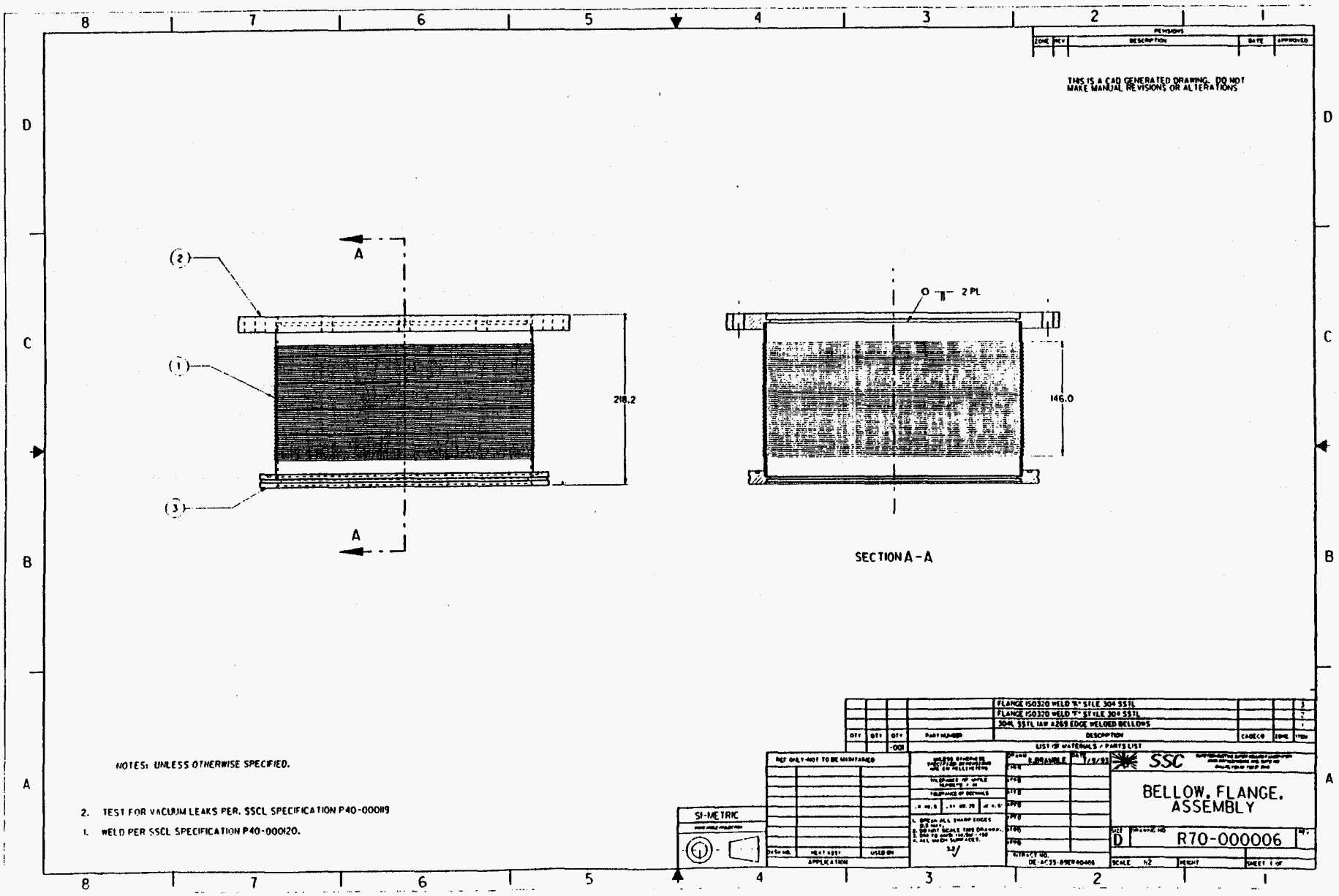
THIS IS A CAD GENERATED DRAWING. DO NOT MAKE MANUAL REVISIONS OR ALTERATIONS
A
A
(2)
(1)
(3)
218.2
2 PL
146.0
SECTION A - A
NOTES: UNLESS OTHERWISE SPECIFIED.
2. TEST FOR VACUUM LEAKS PER. SSCL SPECIFICATION P40-000119
1. WELD PER SSCL SPECIFICATION P40-000120.
FLANGE ISO320 WELD "A" STYLE 304 SSTL
FLANGE ISO320 WELD "F" STYLE 304 SSTL
304L SSTL IAW A269 EDGE WELDED BELLOWS
LIST OF MATERIALS / PARTS LIST
SI-METRIC
SSC
BELLOW, FLANGE, ASSEMBLY
D
R70-000006

REVISIONS				
ZONE	REV	DESCRIPTION	DATE	APPROVED

THIS IS A CAD GENERATED DRAWING. DO NOT MAKE MANUAL REVISIONS OR ALTERATIONS

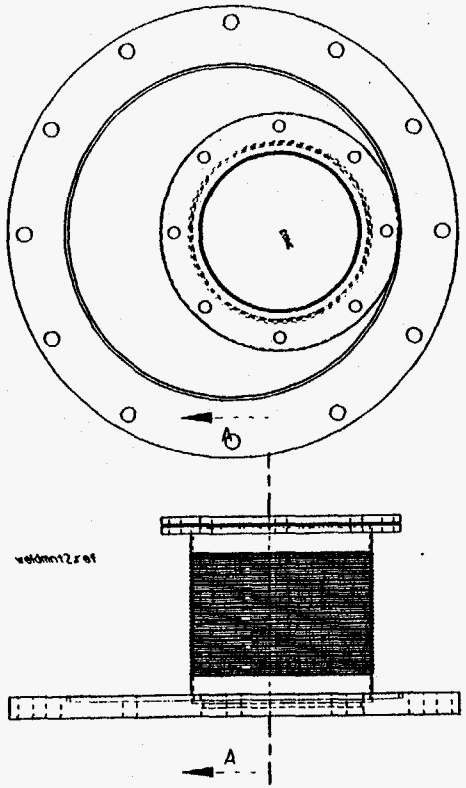

SECTION A-A

NOTES: UNLESS OTHERWISE SPECIFIED.

LIST OF MATERIALS / PARTS LIST

QTY	QTY	QTY	PART NUMBER	DESCRIPTION	CAGECO	ZONE	ITEM
			R70-000007	FLANGE, WELD ISO160 "F" STYLE, STAINLES			1
				FLANGE, WELD ISO320 MODIFIED BLANK			1
			-001	BELLOW, EDGE WELDED 16", STAINLESS			

REF ONLY-NOT TO BE MAINTAINED

SI-METRIC

SSC

BELLOWS ASSEMBLY, VACUUM-TEST BEAMS

SIZE D | DRAWING NO. R70-000007 | REV

SCALE | WEIGHT | SHEET 1 OF

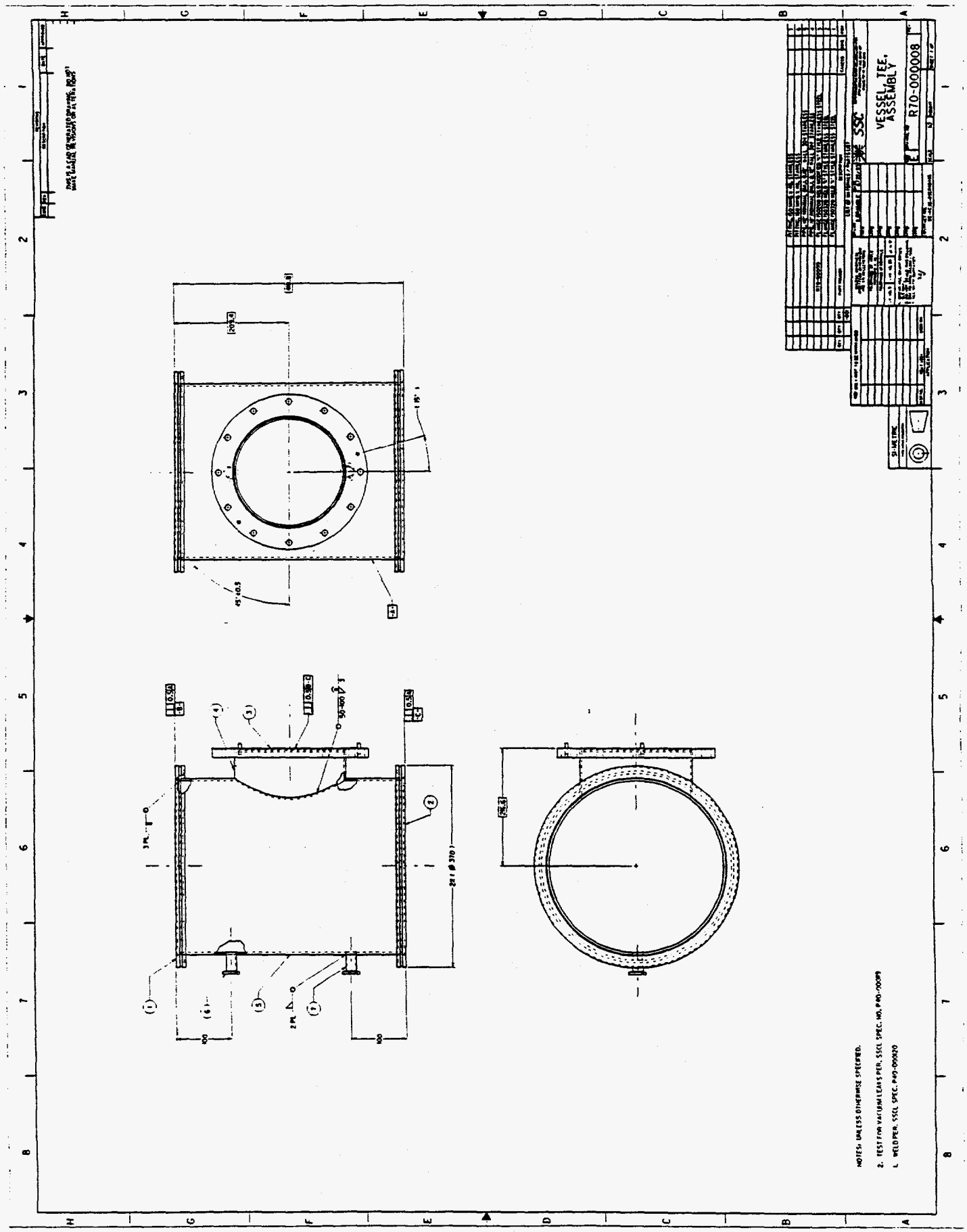
VESSEL, TEE, ASSEMBLY
R70-000008
SSC
NOTES: UNLESS OTHERWISE SPECIFIED.
2. TEST FOR VACUUM LEAKS PER SSCL SPEC. NO. P40-00099
1. WELDER, SSCL SPEC. P40-00020

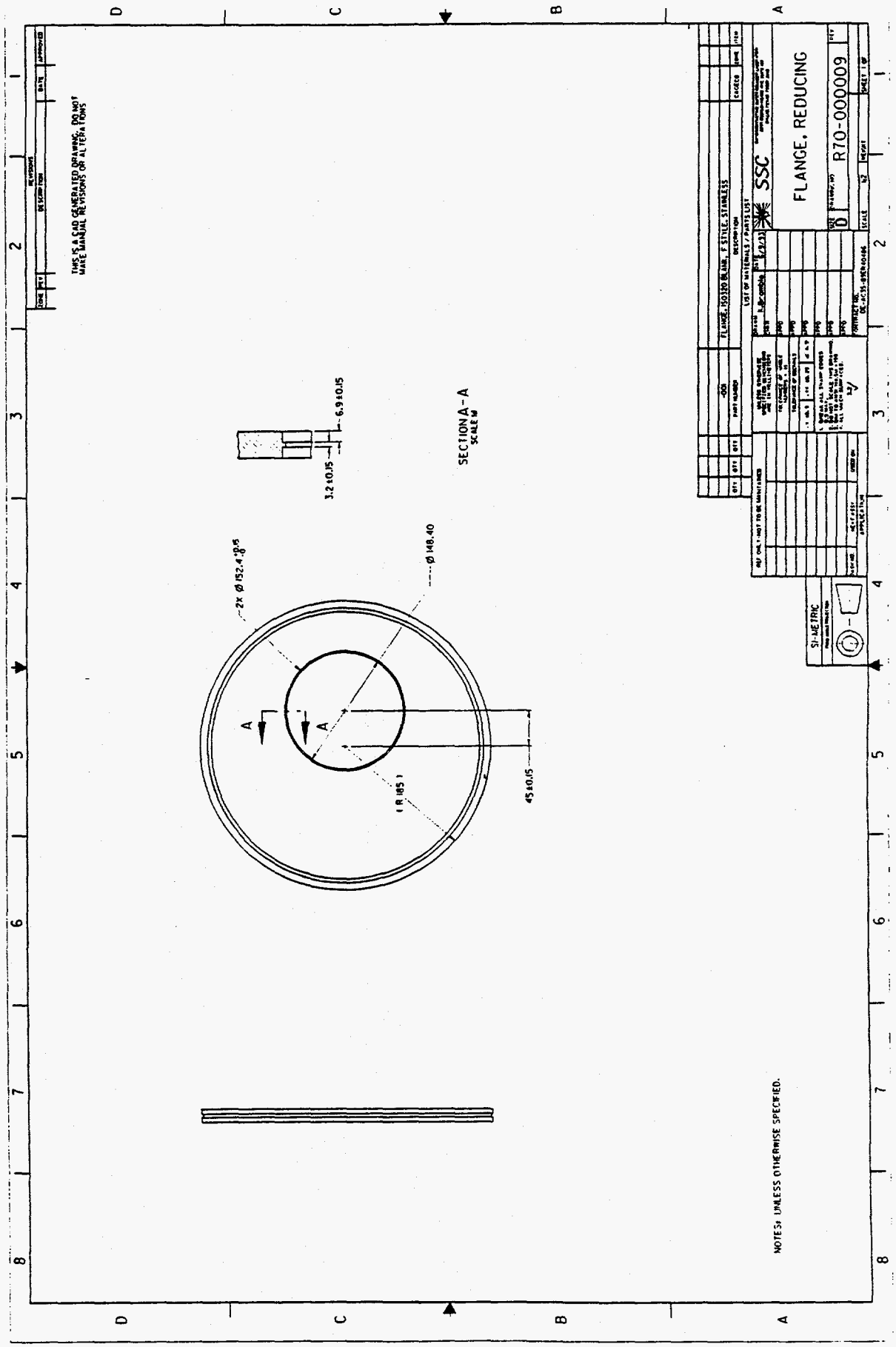
THIS IS A CAD GENERATED DRAWING. DO NOT MAKE MANUAL REVISIONS OR ALTERATIONS
SECTION A-A
SCALE 1:1
6.9±0.15
3.2±0.15
Ø 148.40
45±0.15
(R 185)
NOTES: UNLESS OTHERWISE SPECIFIED.
FLANGE, ISO320 BLANK, F STYLE, STAINLESS
LIST OF MATERIALS / PARTS LIST
SSC
FLANGE, REDUCING
R70-000009
SI-METRIC

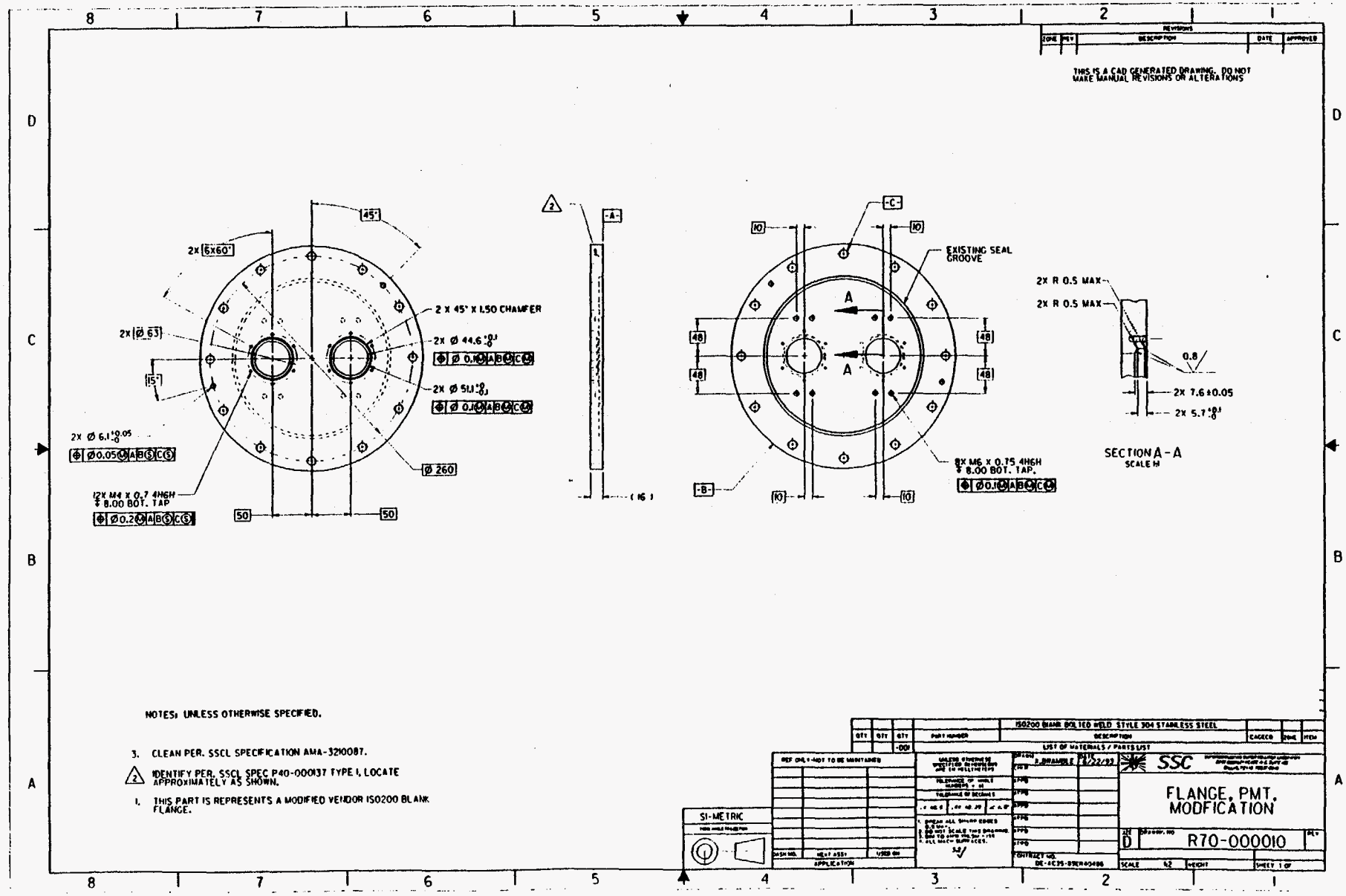

THIS IS A CAD GENERATED DRAWING. DO NOT MAKE MANUAL REVISIONS OR ALTERATIONS
2X 6X60°
45°
2 X 45° X 1.50 CHAMFER
2X Ø 63
2X Ø 44.6
2X Ø 51.1
15°
2X Ø 6.1
Ø 260
12X M4 X 0.7 4H6H ↧ 8.00 BOT. TAP
50
50
-A-
(16)
-C-
10
10
EXISTING SEAL GROOVE
A
A
48
48
48
48
-B-
10
10
8X M6 X 0.75 4H6H ↧ 8.00 BOT. TAP.
2X R 0.5 MAX
2X R 0.5 MAX
0.8
2X 7.6±0.05
2X 5.7
SECTION A-A
SCALE 1:1
NOTES: UNLESS OTHERWISE SPECIFIED.
3. CLEAN PER. SSCL SPECIFICATION AMA-3210087.
2 IDENTIFY PER. SSCL SPEC P40-000137 TYPE I, LOCATE APPROXIMATELY AS SHOWN.
1. THIS PART IS REPRESENTS A MODIFIED VENDOR ISO200 BLANK FLANGE.
ISO200 BLANK BOLTED WELD STYLE 304 STAINLESS STEEL
LIST OF MATERIALS / PARTS LIST
SI-METRIC
SSC
FLANGE, PMT, MODFICATION
D
R70-000010
SCALE 1:2
SHEET 1 OF

REVISIONS				
ZONE	REV	DESCRIPTION	DATE	APPROVED

THIS IS A CAD GENERATED DRAWING. DO NOT MAKE MANUAL REVISIONS OR ALTERATIONS

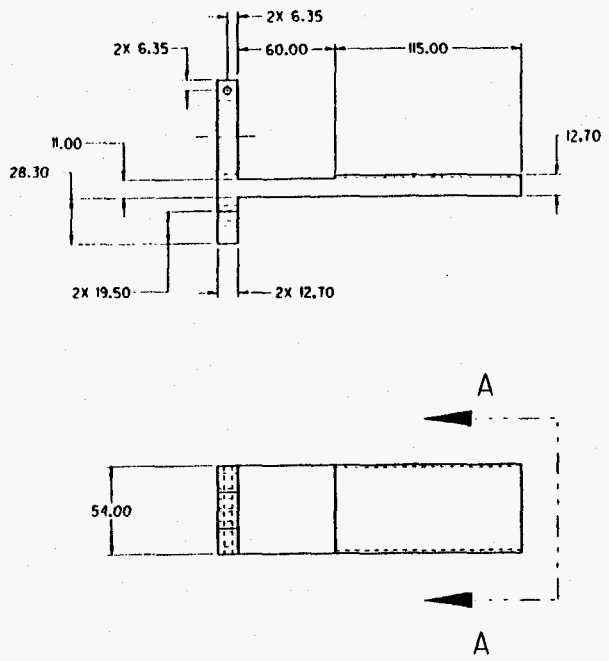

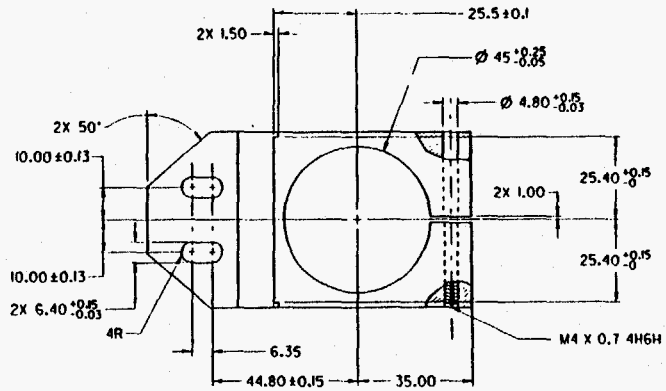

VIEW A
SCALE 1:1

NOTES: UNLESS OTHERWISE SPECIFIED.

QTY	QTY	QTY	PART NUMBER	DESCRIPTION	CAGECO	ZONE	ITEM
		-001		BRACKET, 2024-T6 ALUMINUM			
				LIST OF MATERIALS / PARTS LIST			

REF ONLY-NOT TO BE MAINTAINED

DASH NO.	NEXT ASSY	USED ON
APPLICATION		

UNLESS OTHERWISE SPECIFIED DIMENSIONS ARE IN MILLIMETERS

TOLERANCE OF WHOLE NUMBERS ± ±1

TOLERANCE OF DECIMALS

.X ±0.5 | .XX ±0.25 | ∠ ±.5°

1. BREAK ALL SHARP EDGES 0.5 MAX.
2. DO NOT SCALE THIS DRAWING.
3. DIM TO ANSI Y14.5M - 1982
4. ALL MACH SURFACES.

3.2√

DRAWN	K.Bramble	DATE 6/9/93
CHK'R		
APP'D		
APP'D		
APP'D		
APP'D		
APP'D		
APP'D		

CONTRACT NO. DE-AC35-89ER40486

SSC SUPERCONDUCTING SUPER COLLIDER LABORATORY 2550 BECKLEYMEADE AVE. SUITE 125 DALLAS, TEXAS 75237-3946

BRACKET, CRYSTAL, SRD

SIZE	DRAWING NO	REV
C	R70-000011	

SCALE	1:2	WEIGHT	SHEET 1 OF

REVISIONS				
ZONE	REV	DESCRIPTION	DATE	APPROVED

THIS IS A CAD GENERATED DRAWING. DO NOT MAKE MANUAL REVISIONS OR ALTERATIONS

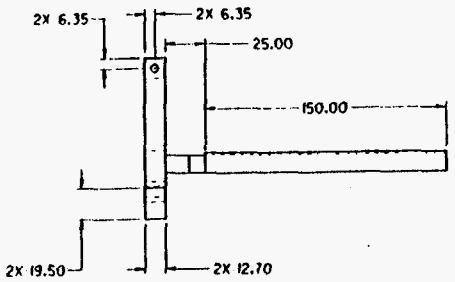

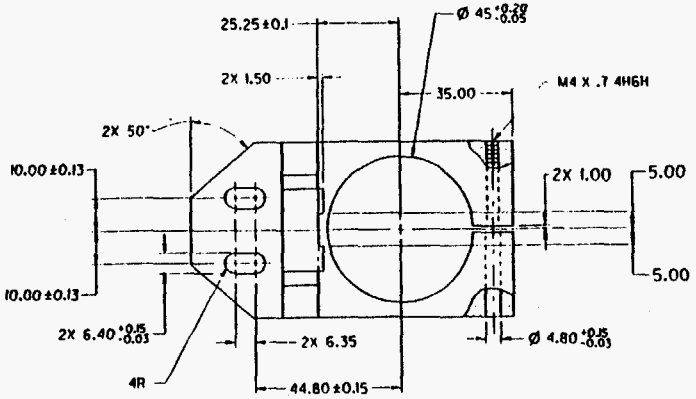

VIEW A
SCALE 1:1

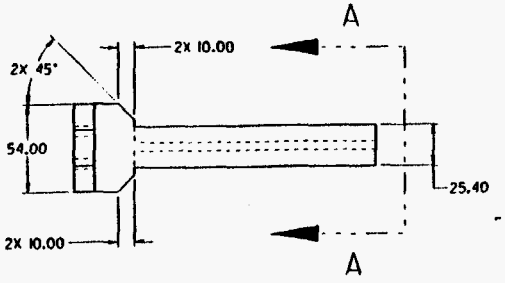

NOTES: UNLESS OTHERWISE SPECIFIED.

QTY	QTY	QTY	PART NUMBER	DESCRIPTION	CAGECO	ZONE	ITEM
		-001		BRACKET, 2024-T6			

LIST OF MATERIALS / PARTS LIST

REF ONLY-NOT TO BE MAINTAINED		
DASH NO.	NEXT ASSY	USED ON
APPLICATION		

UNLESS OTHERWISE SPECIFIED DIMENSIONS ARE IN MILLIMETERS

TOLERANCE OF WHOLE NUMBERS ± .01

TOLERANCE OF DECIMALS

.X ±0.5 | .XX ±0.25 | ∠ ±.5°

1. BREAK ALL SHARP EDGES 0.5 MAX.
2. DO NOT SCALE THIS DRAWING.
3. DIM TO ANSI Y14.5M - 1982
4. ALL MACH SURFACES.

3.2

DRAWN	K.Bramble	DATE 6/4/93
CHKR		
APPD		
APPD		
APPD		
APPD		
APPD		
APPD		
CONTRACT NO	DE AC 35 89ER40496	

SSC — SUPERCONDUCTING SUPER COLLIDER LABORATORY
2550 BECKLEYMEADE AVE. SUITE 125
DALLAS, TEXAS 75237-3946

BRACKET, SCINTILLATOR, SRD

SIZE	DRAWING NO	REV
C	R70-000012	

SCALE	1:2	WEIGHT	SHEET 1 OF

REVISIONS				
ZONE	REV	DESCRIPTION	DATE	APPROVED

THIS IS A CAD GENERATED DRAWING. DO NOT MAKE MANUAL REVISIONS OR ALTERATIONS

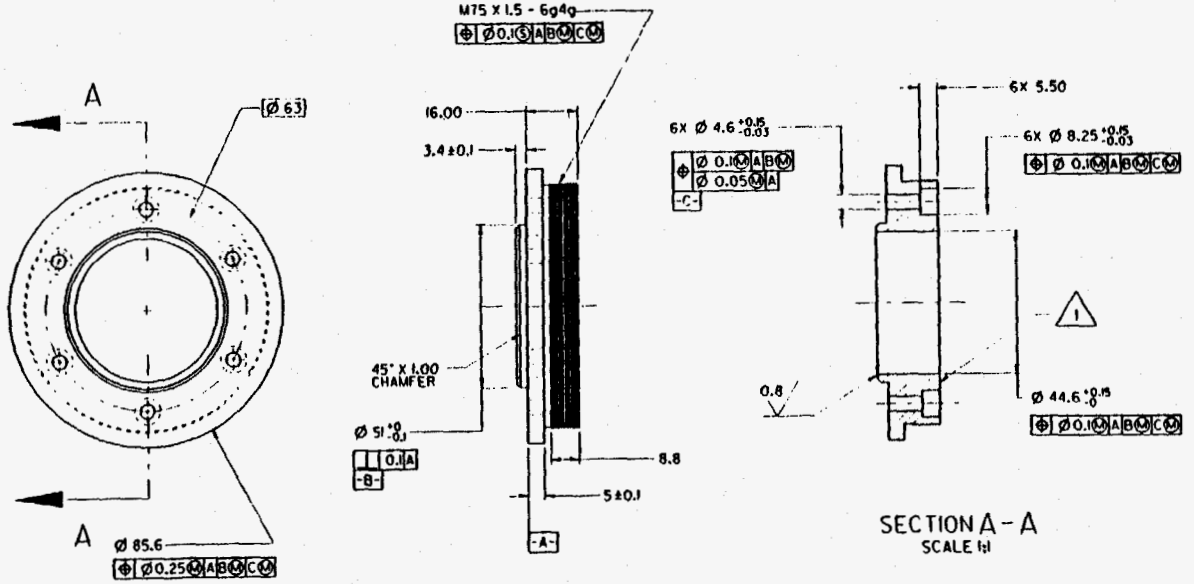

SECTION A - A
SCALE 1:1

NOTES: UNLESS OTHERWISE SPECIFIED.

2. CLEAN PER. SSCL SPECIFICATION AMA-3210087.

1 IDENTIFY PER. SSCL SPEC. P40-000137, LOCATE APPROXIMATELY AS SHOWN.

QTY	QTY	QTY	PART NUMBER	DESCRIPTION	CAGECO	ZONE	ITEM
		-001		FLANGE, 304 STAINLESS STEEL			

LIST OF MATERIALS / PARTS LIST

REF ONLY - NOT TO BE MAINTAINED

DASH NO.	NEXT ASSY	USED ON
APPLICATION		

UNLESS OTHERWISE SPECIFIED DIMENSIONS ARE IN MILLIMETERS

TOLERANCE OF WHOLE NUMBERS ± 1

TOLERANCE OF DECIMALS

.X ±0.5 | .XX ±0.25 | ∠ ±.5°

1. BREAK ALL SHARP EDGES 0.5 MAX.
2. DO NOT SCALE THIS DRAWING.
3. DIM TO ANSI Y14.5M - 1982
4. ALL MACH SURFACES. 3.2

DRAWN	K.BRAMBLE	DATE 6/22/93
CHKR		
APPD		
APPD		
APPD		
APPD		
APPD		
APPD		
CONTRACT NO.	DE-AC35-89ER40486	

SSC — SUPERCONDUCTING SUPER COLLIDER LABORATORY
2550 BECKLEYMEADE AVE. SUITE 175
DALLAS, TEXAS 75237-3946

FLANGE, PMT

SIZE	DRAWING NO	REV
C	R70-000013	

SCALE 1:1 | WEIGHT | SHEET 1 OF

REVISIONS				
ZONE	REV	DESCRIPTION	DATE	APPROVED

THIS IS A CAD GENERATED DRAWING. DO NOT MAKE MANUAL REVISIONS OR ALTERATIONS

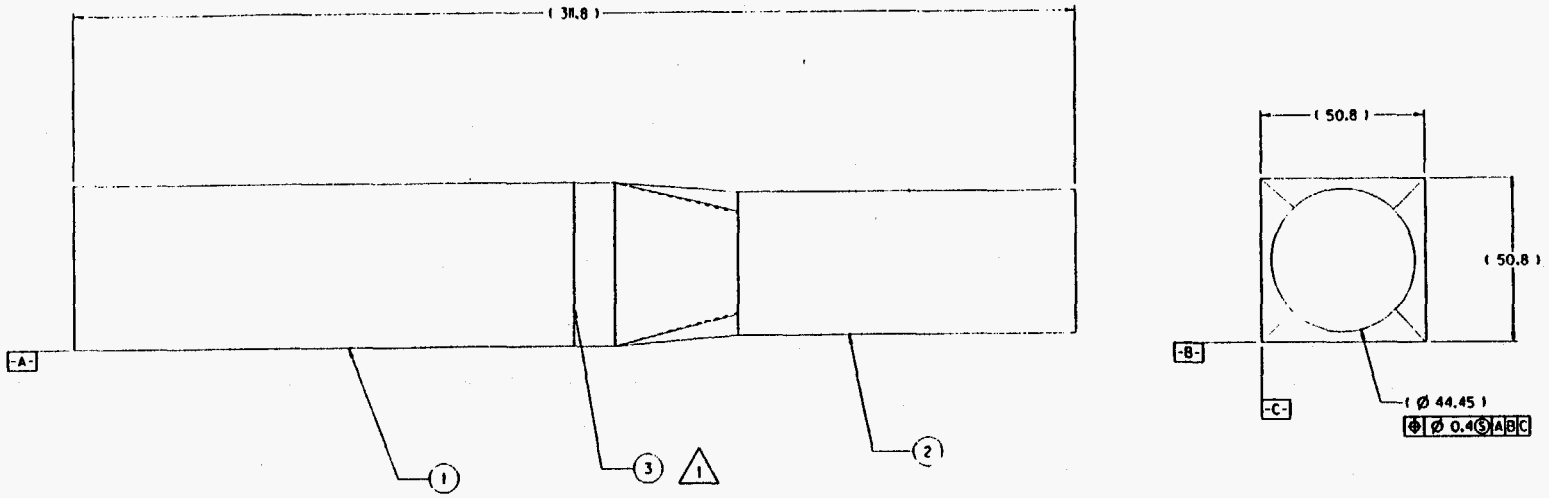

NOTES: UNLESS OTHERWISE SPECIFIED.

2. CLEAN PER.

1 APPLY BICRON OPTICAL BONDING ADHESIVE PER. MANUFACTURERS RECOMENDED PRACTICE.

QTY	QTY	QTY	PART NUMBER	DESCRIPTION	CAGECO	ZONE	ITEM
			BC-600	OPTICAL BONDING CEMENT, BICRON PN			3
				TRANSITION LIGHT PIPE			2
				SODIUM IODIDE (NAI) CRYSTAL			1
		-001		LIST OF MATERIALS / PARTS LIST			

REF ONLY-NOT TO BE MAINTAINED		
DASH NO.	NEXT ASSY	USED ON
APPLICATION		

UNLESS OTHERWISE SPECIFIED DIMENSIONS ARE IN MILLIMETERS

TOLERANCE OF WHOLE NUMBERS = ±1

TOLERANCE OF DECIMALS

.X ±0.5 | .XX ±0.25 | ∠ ±.5°

1. BREAK ALL SHARP EDGES 0.5 MAX.
2. DO NOT SCALE THIS DRAWING.
3. DIM. TO ANSI Y14.5M - 1982
4. ALL MACH SURFACES.

3.2√

DRAWN	K.BRAMBLE	DATE 6/22/93
CHKR		
APPD		
APPD		
APPD		
APPD		
APPD		
APPD		

CONTRACT NO. DE-AC35-89ER40486

SSC SUPERCONDUCTING SUPER COLLIDER LABORATORY 2550 BECKLEY AVENUE P.O. BOX 1518 DALLAS, TEXAS 75237-3946

CRYSTAL, NAI, ASSEMBLY

SIZE	DRAWING NO	REV
C	R70-000014	
SCALE 1:1	WEIGHT	SHEET 1 OF

REVISIONS				
ZONE	REV	DESCRIPTION	DATE	APPROVED

THIS IS A CAD GENERATED DRAWING. DO NOT MAKE MANUAL REVISIONS OR ALTERATIONS

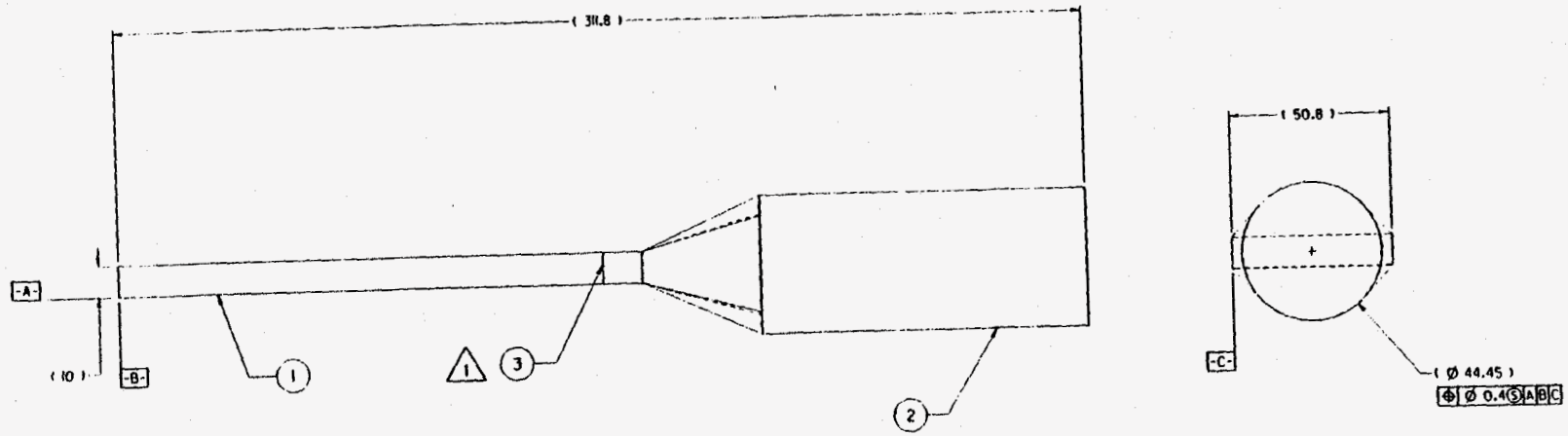

NOTES: UNLESS OTHERWISE SPECIFIED.

2. CLEAN PER.

1 APPLY BICRON OPTICAL BONDING ADHESIVE PER. MANUFACTURERS RECOMMENDED PRACTICE.

QTY	QTY	QTY	PART NUMBER	DESCRIPTION	CAGECO	ZONE	ITEM
			BC-600	OPTICAL BONDING CEMENT, BICRON PN			1
				TRANSITION LIGHT PIPE			2
		-001		SCINTILLATING PLASTIC			3

LIST OF MATERIALS / PARTS LIST

REF ONLY-NOT TO BE MAINTAINED		
DASH NO.	NEXT ASSY	USED ON
APPLICATION		

UNLESS OTHERWISE SPECIFIED DIMENSIONS ARE IN MILLIMETERS

TOLERANCE OF WHOLE NUMBERS ± .01

TOLERANCE OF DECIMALS

.X ±0.5	.XX ±0.25	∠ ±.5°

1. BREAK ALL SHARP EDGES 0.5 MAX.
2. DO NOT SCALE THIS DRAWING.
3. DIM TO ANSI Y14.5M - 1982
4. ALL MACH SURFACES.

3.2

DRAWN	K.BRAMBLE	DATE 6/22/93
CHKR		
APPD		
APPD		
APPD		
APPD		
APPD		
APPD		

CONTRACT NO. DE-AC35-89ER40486

SSC SUPERCONDUCTING SUPER COLLIDER LABORATORY 2550 BECKLEY MEADE AVE. SUITE 125 DALLAS, TEXAS 75237-3946

SCINTILLATOR, ASSEMBLY

SIZE	DRAWING NO	REV
C	R70-000015	

SCALE 1:1 | WEIGHT | SHEET 1 OF

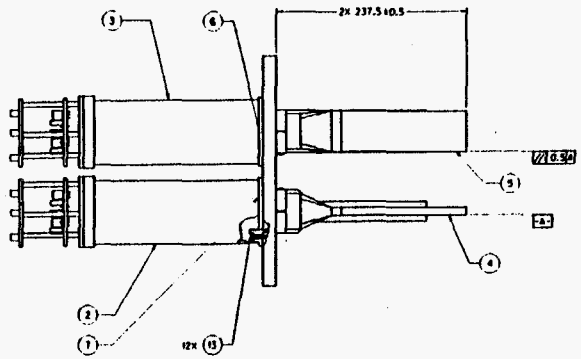

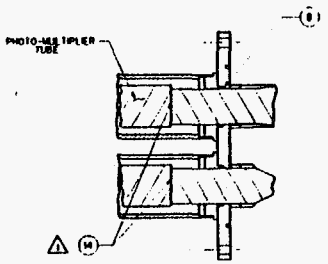

SECTION A - A

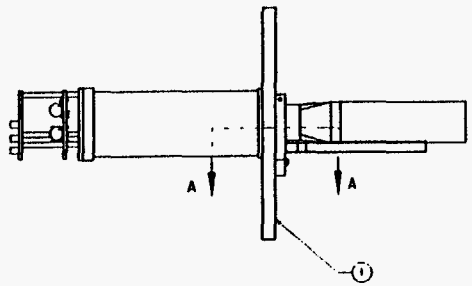

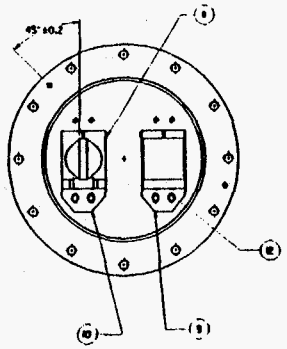

NOTES: UNLESS OTHERWISE SPECIFIED.

⚠ APPLY DC-820 SILICONE OPTICAL GREASE BEFORE ASSEMBLY.

SSC

DETECTOR ASSEMBLY
TEST BEAM
SRD

R70-000016

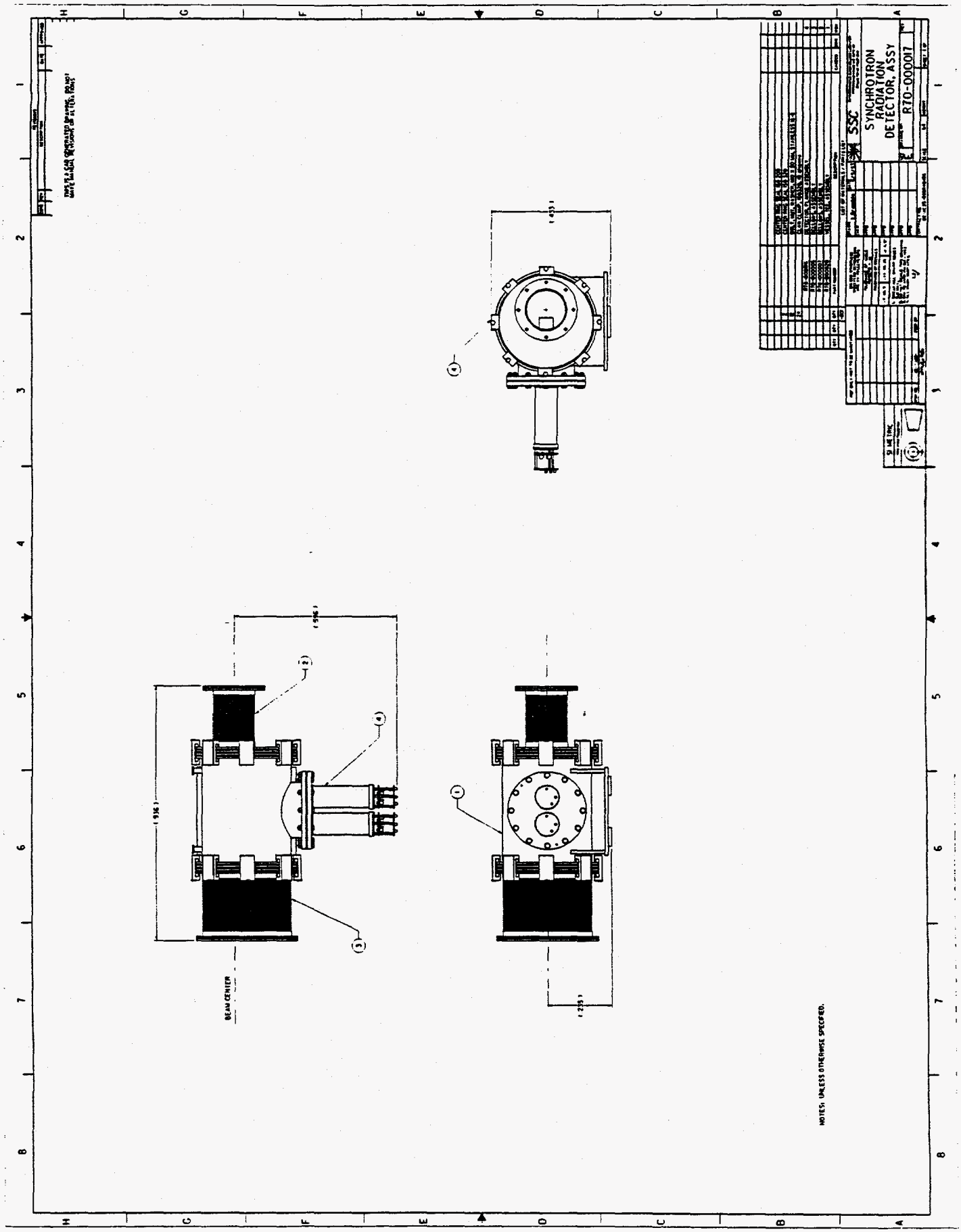
SYNCHROTRON
RADIATION
DETECTOR, ASSY
R70-000017
SSC
BEAM CENTER
NOTES: UNLESS OTHERWISE SPECIFIED.

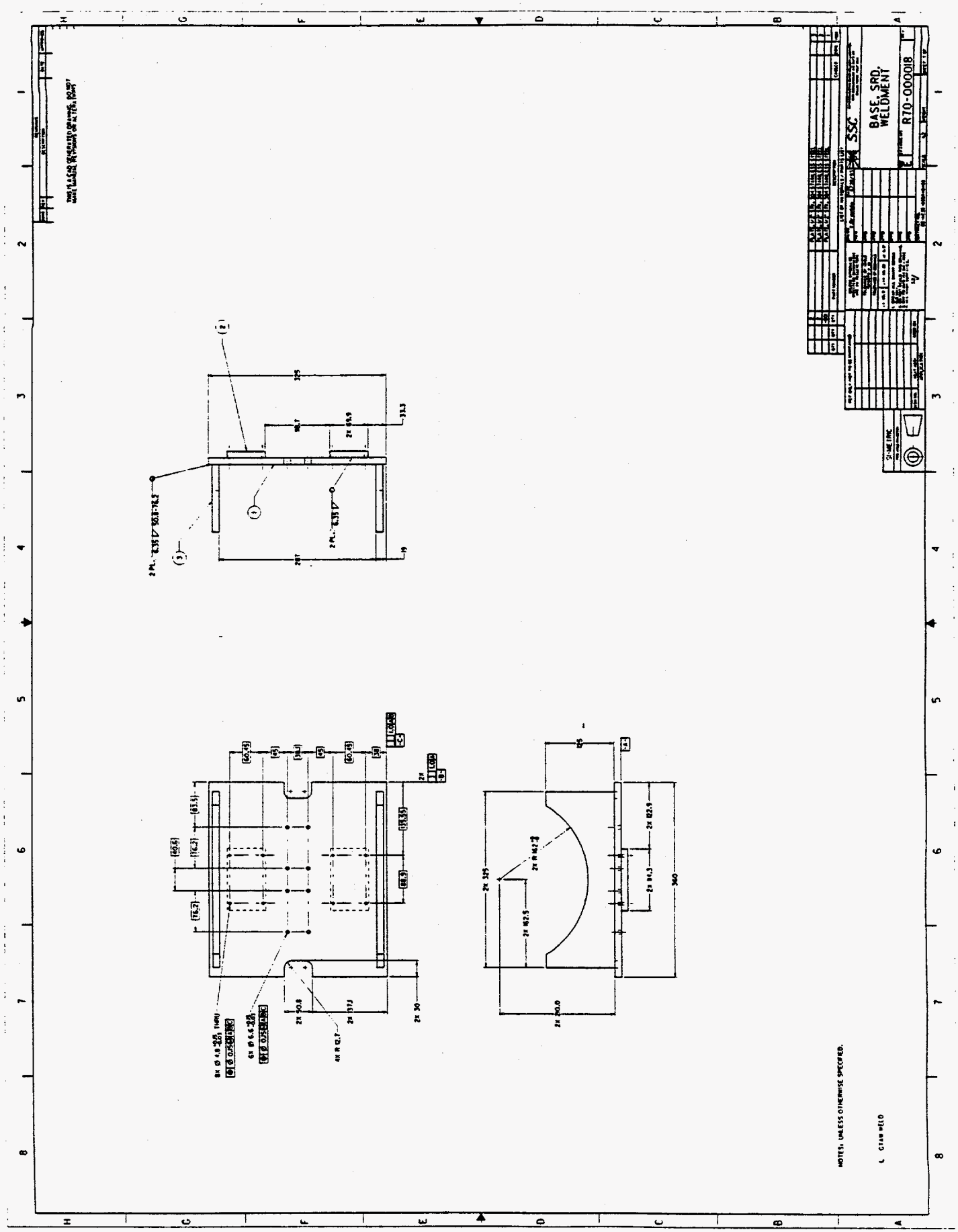
BASE, SRD, WELDMENT
R70-000018
SSC
NOTES: UNLESS OTHERWISE SPECIFIED.

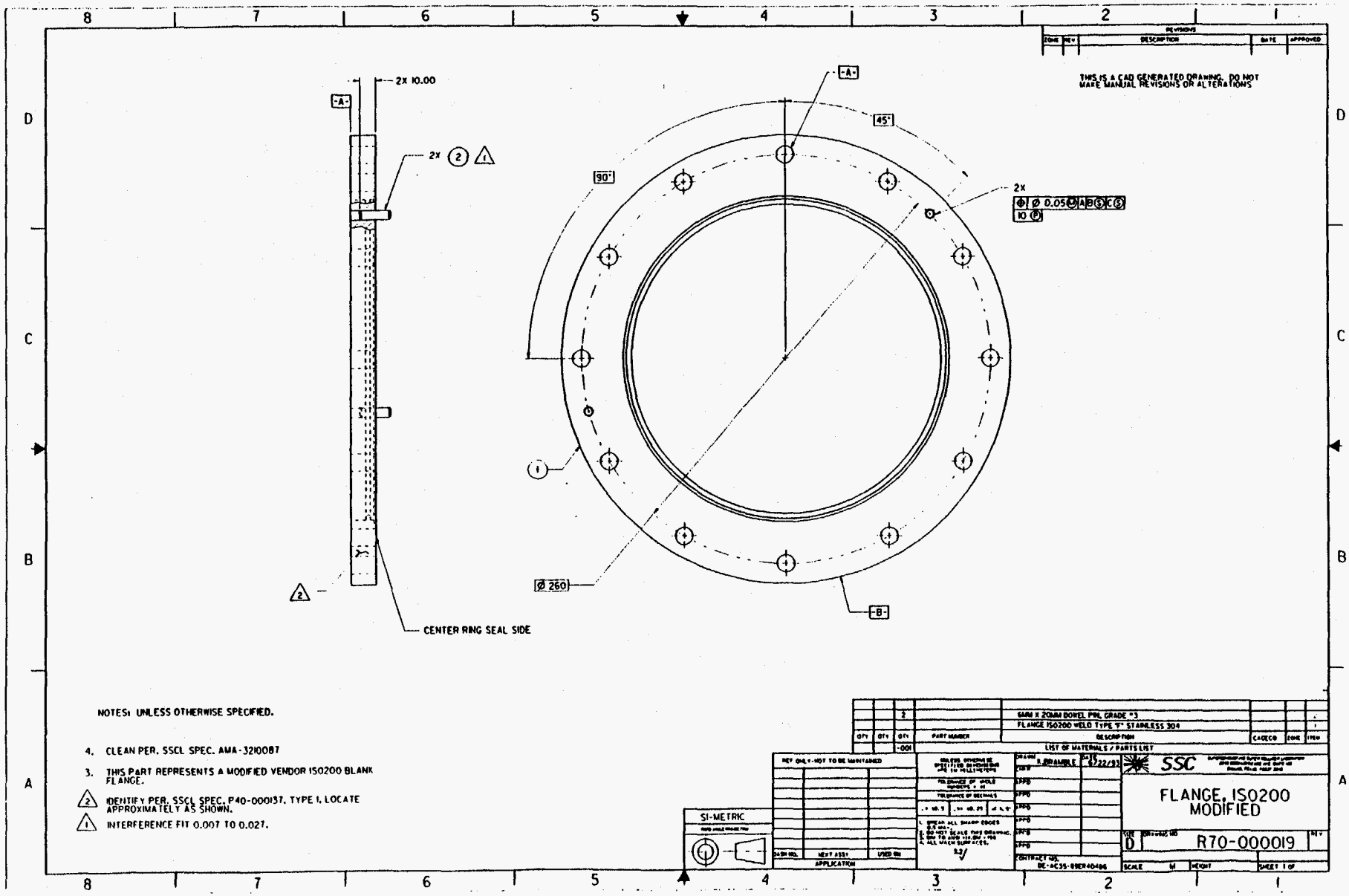
THIS IS A CAD GENERATED DRAWING. DO NOT MAKE MANUAL REVISIONS OR ALTERATIONS
2X 10.00
-A-
2X (2) (1)
45°
90°
2X
Ø 0.05 M A B S C S
10 P
Ø 260
-B-
CENTER RING SEAL SIDE
NOTES: UNLESS OTHERWISE SPECIFIED.
4. CLEAN PER. SSCL SPEC. AMA-3210087
3. THIS PART REPRESENTS A MODIFIED VENDOR ISO200 BLANK FLANGE.
(2) IDENTIFY PER. SSCL SPEC. P40-000137, TYPE I, LOCATE APPROXIMATELY AS SHOWN.
(1) INTERFERENCE FIT 0.007 TO 0.027.
6MM X 20MM DOWEL PIN, GRADE "3
FLANGE ISO200 WELD TYPE "F" STAINLESS 304
LIST OF MATERIALS / PARTS LIST
SI-METRIC
SSC
FLANGE, ISO200 MODIFIED
R70-000019
SIZE D
SCALE
WEIGHT
SHEET 1 OF

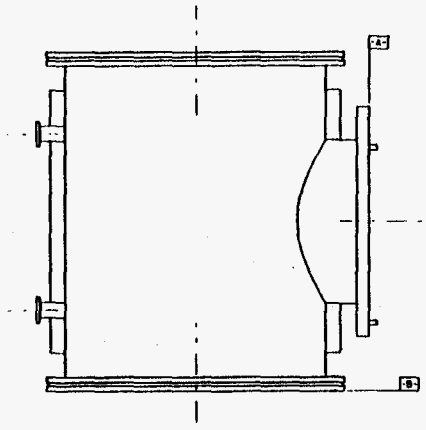

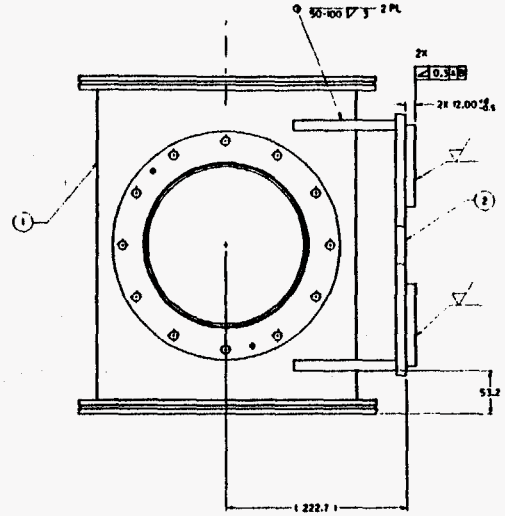

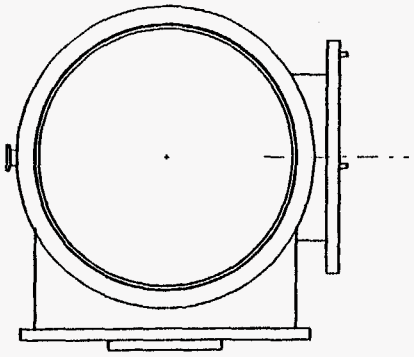

NOTES: UNLESS OTHERWISE SPECIFIED.

2. CLEAN PER. SSCL SPEC. AMA-3210087.

1. WELD PER. SSCL SPEC. P40-000120

SSC

VESSEL, SUB-ASSEMBLY

R70-000020

REVISIONS				
ZONE	REV	DESCRIPTION	DATE	APPROVED

THIS IS A CAD GENERATED DRAWING. DO NOT MAKE MANUAL REVISIONS OR ALTERATIONS

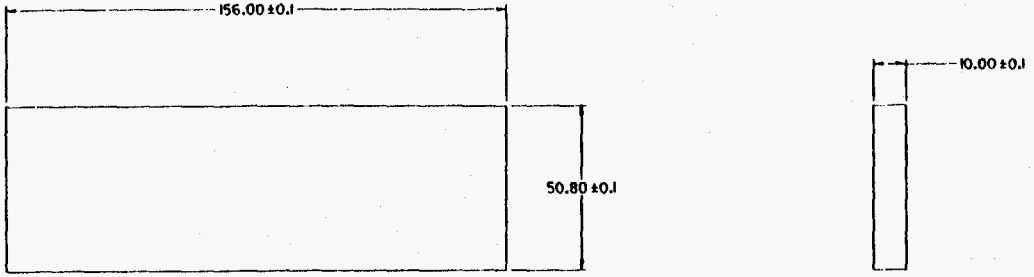

NOTES: UNLESS OTHERWISE SPECIFIED.

1. CUT AND POLISH TO MEET O.A.L.

QTY	QTY	QTY	PART NUMBER	DESCRIPTION	CAGECO	ZONE	ITEM
		-001		SCINTILLATING, PLASTIC			

LIST OF MATERIALS / PARTS LIST

REF ONLY-NOT TO BE MAINTAINED		
DASH NO.	NEXT ASSY	USED ON
APPLICATION		

UNLESS OTHERWISE SPECIFIED DIMENSIONS ARE IN MILLIMETERS

TOLERANCE OF WHOLE NUMBERS ± ±1

TOLERANCE OF DECIMALS

.X ±0.5 | .XX ±0.25 | ∠ ±.5°

1. BREAK ALL SHARP EDGES 0.5 MAX.
2. DO NOT SCALE THIS DRAWING.
3. DIM TO ANSI Y14.5M - 1982
4. ALL MACH SURFACES.

3.2/

DRAWN	K.BRAMBLE
DATE	6/22/93
CHKR	
APPD	
APPD	
APPD	
APPD	
APPD	
APPD	
CONTRACT NO.	DE-AC35-89ER40486

SSC SUPERCONDUCTING SUPER COLLIDER LABORATORY
2550 BECKLEYMEADE AVE. SUITE 125
DALLAS, TEXAS 75237-3946

SCINTILLATOR, PLASTIC

SIZE	DRAWING NO	REV
C	R70-000021	

SCALE	full	WEIGHT	SHEET 1 OF

REVISIONS				
ZONE	REV	DESCRIPTION	DATE	APPROVED

THIS IS A CAD GENERATED DRAWING. DO NOT MAKE MANUAL REVISIONS OR ALTERATIONS

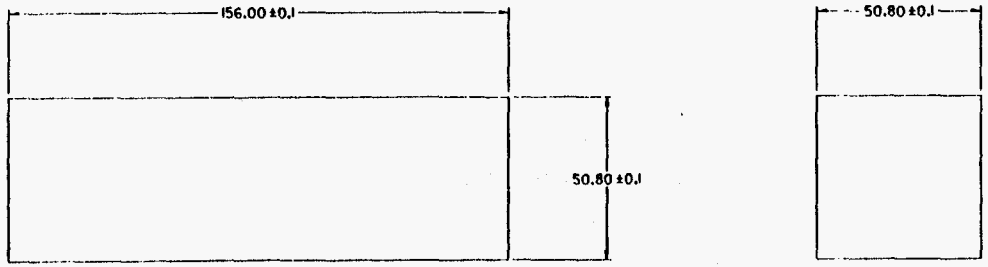

NOTES: UNLESS OTHERWISE SPECIFIED.

1. CUT AND POLISH TO MEET O.A.L..

QTY	QTY	QTY	PART NUMBER	CRYSTAL, NaI DESCRIPTION	CAGECO	ZONE	ITEM
		-001		LIST OF MATERIALS / PARTS LIST			

REF ONLY - NOT TO BE MAINTAINED

DASH NO.	NEXT ASSY	USED ON
APPLICATION		

UNLESS OTHERWISE SPECIFIED DIMENSIONS ARE IN MILLIMETERS

TOLERANCE OF WHOLE NUMBERS ± .1

TOLERANCE OF DECIMALS

.X ±0.5	.XX ±0.25	∠ ±.5°

1. BREAK ALL SHARP EDGES 0.5 MAX.
2. DO NOT SCALE THIS DRAWING.
3. DIM TO ANSI Y14.5M - 1982
4. ALL MACH SURFACES.

3.2

DRAWN	K.BRAMBLE	DATE 6/22/93
CHKR		
APPD		
APPD		
APPD		
APPD		
APPD		

CONTRACT NO. DE-AC35-89ER40486

SSC SUPERCONDUCTING SUPER COLLIDER LABORATORY 2550 BECKLEYMEADE AVE. SUITE 125 DALLAS, TEXAS 75237-3946

CRYSTAL, NaI

SIZE	DRAWING NO	REV
C	R70-000022	

SCALE 1:1 | WEIGHT | SHEET 1 OF

REVISIONS				
ZONE	REV	DESCRIPTION	DATE	APPROVED

THIS IS A CAD GENERATED DRAWING. DO NOT MAKE MANUAL REVISIONS OR ALTERATIONS

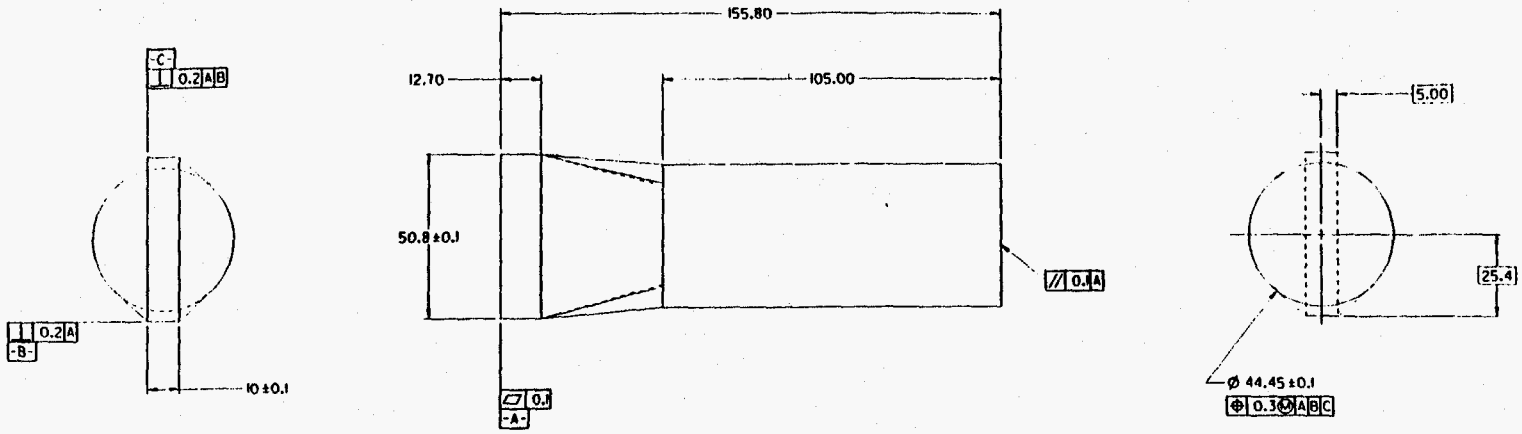

NOTES: UNLESS OTHERWISE SPECIFIED.

1. CUT AND POLISH TO MEET O.A.L..

QTY	QTY	QTY	PART NUMBER	DESCRIPTION	CAGECO	ZONE	ITEM
		-001		LIGHT PIPE, TRANSITION, GLASS			

LIST OF MATERIALS / PARTS LIST

REF ONLY-NOT TO BE MAINTAINED		
DASH NO.	NEXT ASSY	USED ON
APPLICATION		

UNLESS OTHERWISE SPECIFIED DIMENSIONS ARE IN MILLIMETERS

TOLERANCE OF WHOLE NUMBERS ± .1

TOLERANCE OF DECIMALS

.X ±0.1 | .XX ±0.25 | ∠ ±.5°

1. BREAK ALL SHARP EDGES 0.5 MAX.
2. DO NOT SCALE THIS DRAWING.
3. DIM TO ANSI Y14.5M - 1982
4. ALL MACH SURFACES.

3.2

DRAWN	K.BRAMBLE	DATE 6/22/93
CHKR		
APPD		
APPD		
APPD		
APPD		
APPD		
APPD		
CONTRACT NO.	DE-AC35-89ER40486	

SSC SUPERCONDUCTING SUPER COLLIDER LABORATORY
2550 BECKLEYMEADE AVE. SUITE 125
DALLAS, TEXAS 75237-3946

LIGHT PIPE, TRANSITION

SIZE	DRAWING NO	REV
C	R70-000023	

SCALE	1:1	WEIGHT	SHEET 1 OF

REVISIONS				
ZONE	REV	DESCRIPTION	DATE	APPROVED

THIS IS A CAD GENERATED DRAWING. DO NOT MAKE MANUAL REVISIONS OR ALTERATIONS

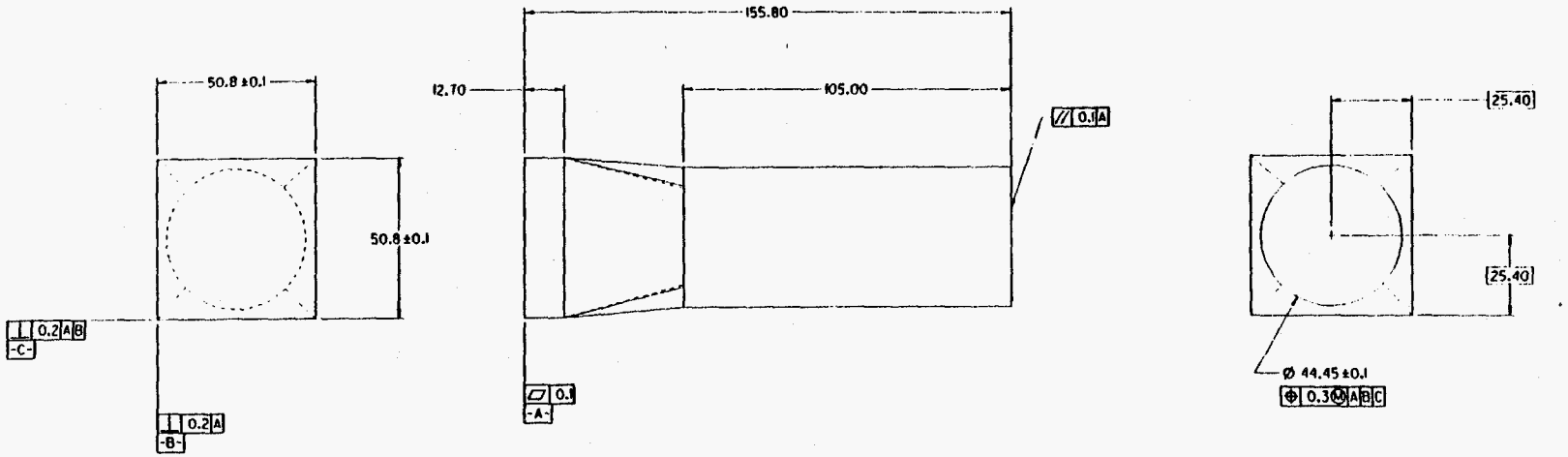

NOTES: UNLESS OTHERWISE SPECIFIED.

1. CUT AND POLISH TO MEET O.A.L..

QTY	QTY	QTY	PART NUMBER	DESCRIPTION	CAGECO	ZONE	ITEM
				LIGHT PIPE, TRANSITION, GLASS			

LIST OF MATERIALS / PARTS LIST

REF ONLY-NOT TO BE MAINTAINED

DASH NO.	NEXT ASSY	USED ON
APPLICATION		

UNLESS OTHERWISE SPECIFIED, DIMENSIONS ARE IN MILLIMETERS

TOLERANCE OF WHOLE NUMBERS ± 0.1

TOLERANCE OF DECIMALS

.X ±0.5 | .XX ±0.25 | ∠ ±.5°

1. BREAK ALL SHARP EDGES 0.5 MAX.
2. DO NOT SCALE THIS DRAWING.
3. DIM TO ANSI Y14.5M - 1982
4. ALL MACH SURFACES.

3.2

DRAWN	K.BRAMBLE	DATE 6/22/93
CHKR		
APPD		
APPD		
APPD		
APPD		
APPD		
APPD		

CONTRACT NO. DE-AC35-89ER40486

SSC SUPERCONDUCTING SUPER COLLIDER LABORATORY 2550 BECKLEYMEADE AVE. SUITE 125 DALLAS, TEXAS 75237-3946

LIGHT PIPE, TRANSITION

SIZE	DRAWING NO	REV
C	R70-000024	

SCALE 1:1 | WEIGHT | SHEET 1 OF

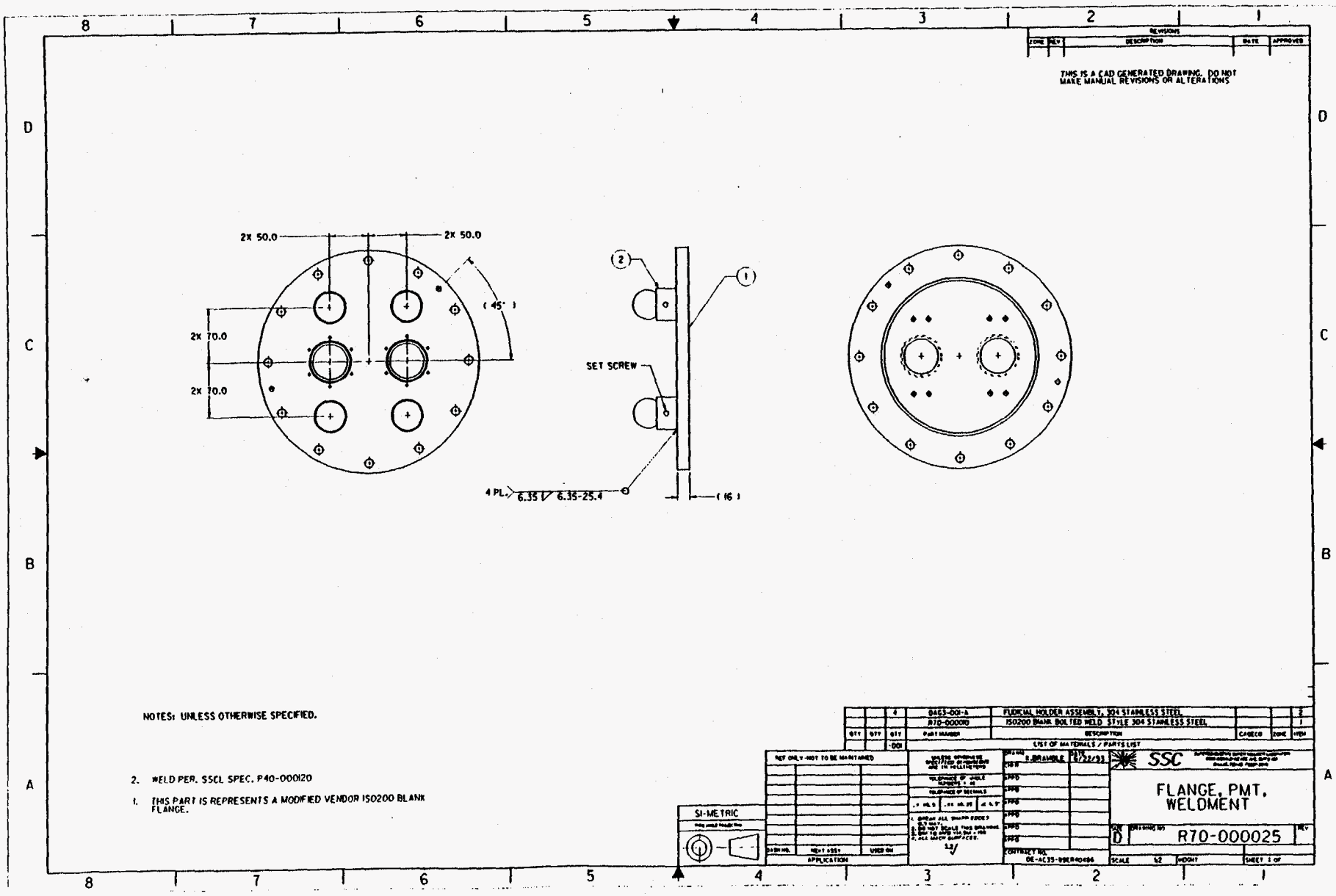

THIS IS A CAD GENERATED DRAWING. DO NOT MAKE MANUAL REVISIONS OR ALTERATIONS
2X 50.0
2X 50.0
2X 70.0
2X 70.0
(45°)
SET SCREW
4 PL. 6.35 6.35-25.4
(16)
NOTES: UNLESS OTHERWISE SPECIFIED.
2. WELD PER. SSCL SPEC. P40-000120
1. THIS PART IS REPRESENTS A MODIFIED VENDOR ISO200 BLANK FLANGE.
DAG3-001-A
R70-000010
FUDICIAL HOLDER ASSEMBLY, 304 STAINLESS STEEL
ISO200 BLANK BOLTED WELD STYLE 304 STAINLESS STEEL
LIST OF MATERIALS / PARTS LIST
SI-METRIC
SSC
FLANGE, PMT, WELDMENT
R70-000025

REVISIONS				
ZONE	REV	DESCRIPTION	DATE	APPROVED

THIS IS A CAD GENERATED DRAWING. DO NOT MAKE MANUAL REVISIONS OR ALTERATIONS

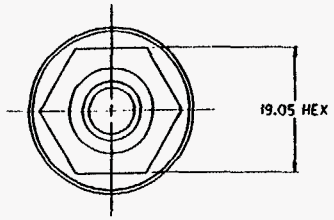

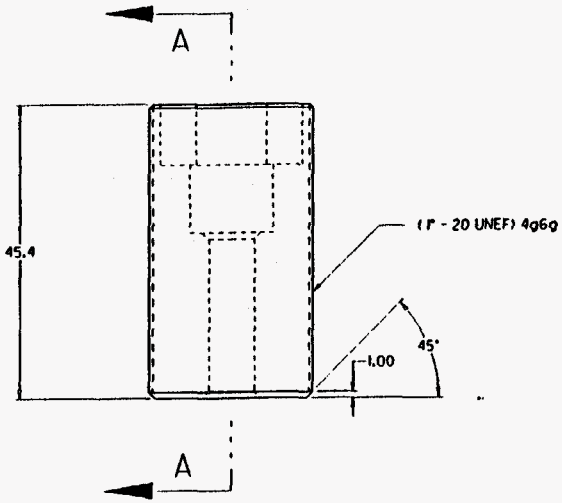

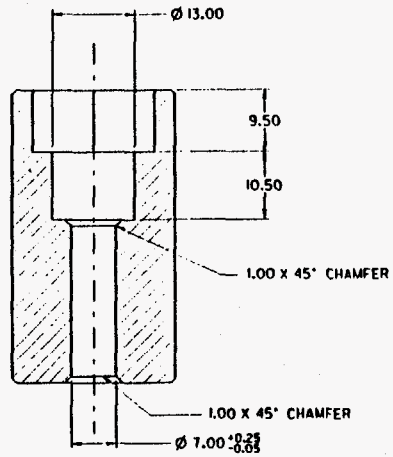

SECTION A - A

NOTES: UNLESS OTHERWISE SPECIFIED.

QTY	QTY	QTY	PART NUMBER	DESCRIPTION	CAGECO	ZONE	ITEM
		-001		BOLT, SAE 1010 or better STEEL			

LIST OF MATERIALS / PARTS LIST

REF ONLY-NOT TO BE MAINTAINED		
DASH NO.	NEXT ASSY	USED ON
APPLICATION		

UNLESS OTHERWISE SPECIFIED DIMENSIONS ARE IN MILLIMETERS

TOLERANCE OF WHOLE NUMBERS = ±1

TOLERANCE OF DECIMALS

.X ±0.5 | .XX ±0.25 | ∠ ±.5°

1. BREAK ALL SHARP EDGES 0.5 MAX.
2. DO NOT SCALE THIS DRAWING.
3. DIM TO ANSI Y14.5M - 1982
4. ALL MACH SURFACES.

3.2 √

DRAWN	K.Bramble	DATE 6/28/93
CHKR		
APPD		
APPD		
APPD		
APPD		
APPD		
APPD		
CONTRACT NO.	DE-AC35-89ER40486	

SSC SUPERCONDUCTING SUPER COLLIDER LABORATORY 2550 BECKLEYMEADE AVE. SUITE 115 DALLAS, TEXAS 75237-3946

BOLT, INTERNAL WRENCH

SIZE	DRAWING NO	REV
C	R70-000026	

SCALE	2:1	WEIGHT	SHEET 1 OF

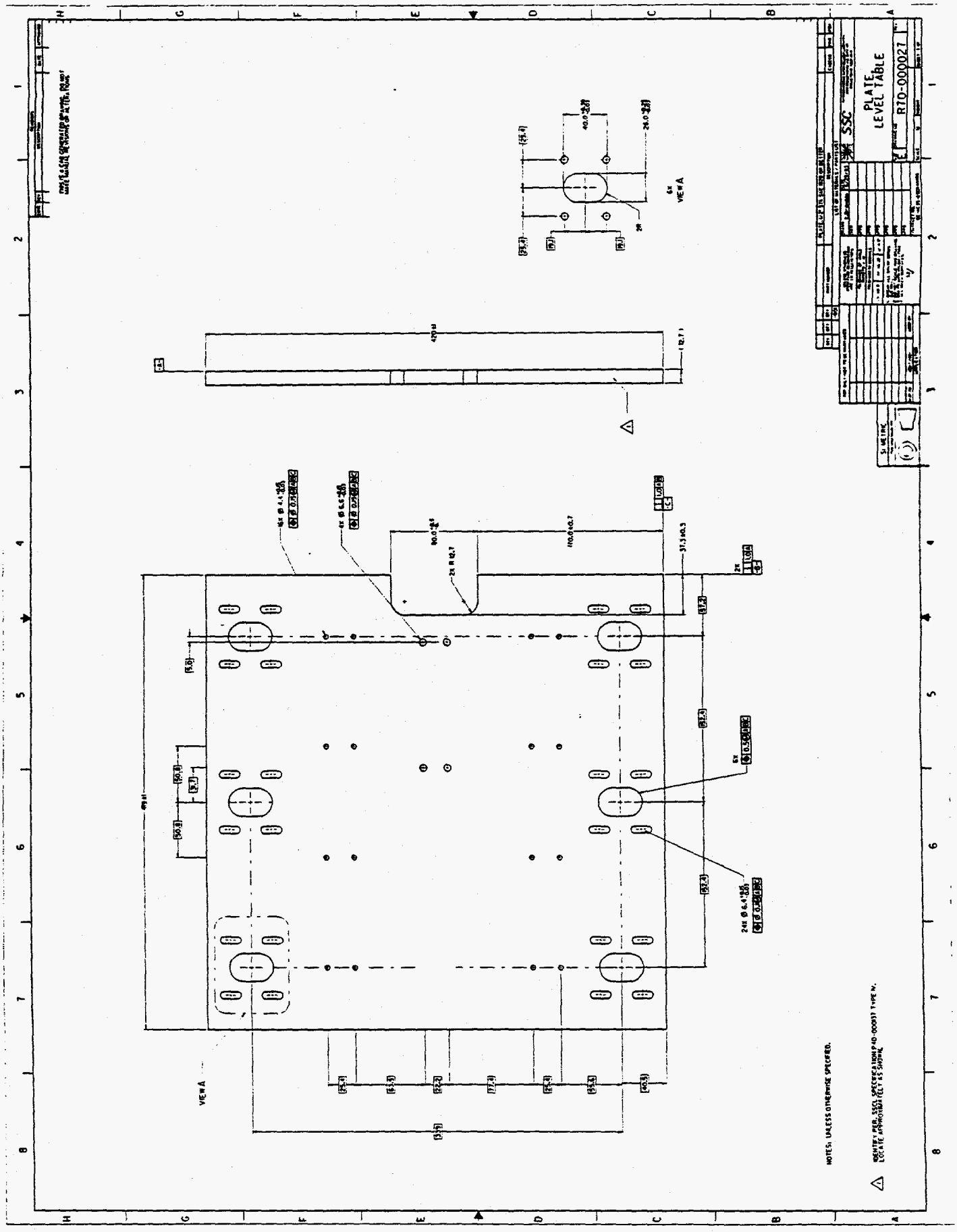
PLATE
LEVEL TABLE
R10-000027
SSC
VIEW A
NOTES: UNLESS OTHERWISE SPECIFIED.

A-72

REVISIONS				
ZONE	REV	DESCRIPTION	DATE	APPROVED

THIS IS A CAD GENERATED DRAWING. DO NOT MAKE MANUAL REVISIONS OR ALTERATIONS

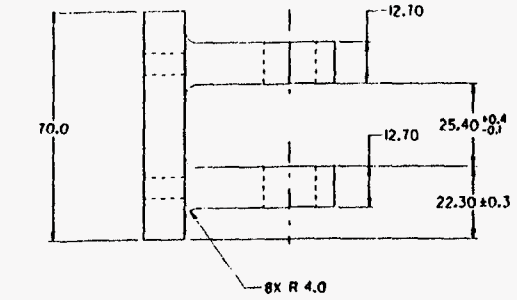

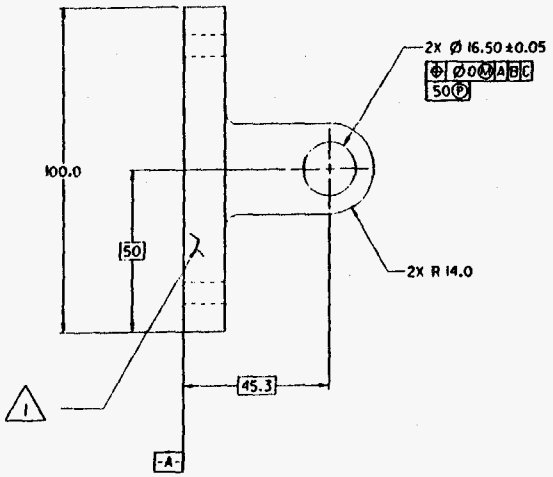

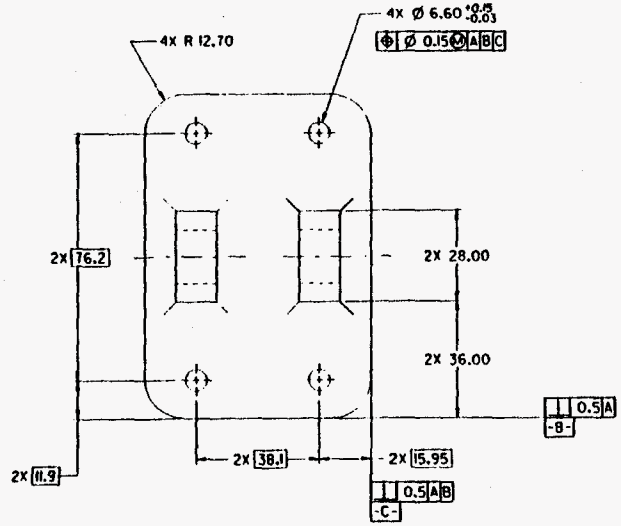

NOTES: UNLESS OTHERWISE SPECIFIED.

1. IDENTIFY PER. SSCL SPECIFICATION P40-000137, TYPE IV. LOCATE APPROXIMATELY AS SHOWN.

QTY	QTY	QTY	PART NUMBER	DESCRIPTION	CAGECO	ZONE	ITEM
		-001	CLEVIS, SAE 1020 STEEL				

LIST OF MATERIALS / PARTS LIST

REF ONLY-NOT TO BE MAINTAINED		
DASH NO.	NEXT ASSY	USED ON
APPLICATION		

UNLESS OTHERWISE SPECIFIED DIMENSIONS ARE IN MILLIMETERS

TOLERANCE OF WHOLE NUMBERS = ±1

TOLERANCE OF DECIMALS

.X ±0.5 | .XX ±0.25 | ∠ ±1.5°

1. BREAK ALL SHARP EDGES 0.5 MAX.
2. DO NOT SCALE THIS DRAWING.
3. DIM TO ANSI Y14.5M - 1982
4. ALL MACH SURFACES.

3.2

DRAWN	K.Bramble	DATE 6/29/93
CHKR		
APPD		
APPD		
APPD		
APPD		
APPD		
APPD		
CONTRACT NO.	DE-AC35-89ER40486	

SSC SUPERCONDUCTING SUPER COLLIDER LABORATORY 2550 BECKLEYMEADE AVE. SUITE 125 DALLAS, TEXAS 75237-3946

CLEVIS, ACTUATOR, SRD

SIZE	DRAWING NO	REV
C	R70-000028	

SCALE	1:1	WEIGHT	SHEET 1 OF

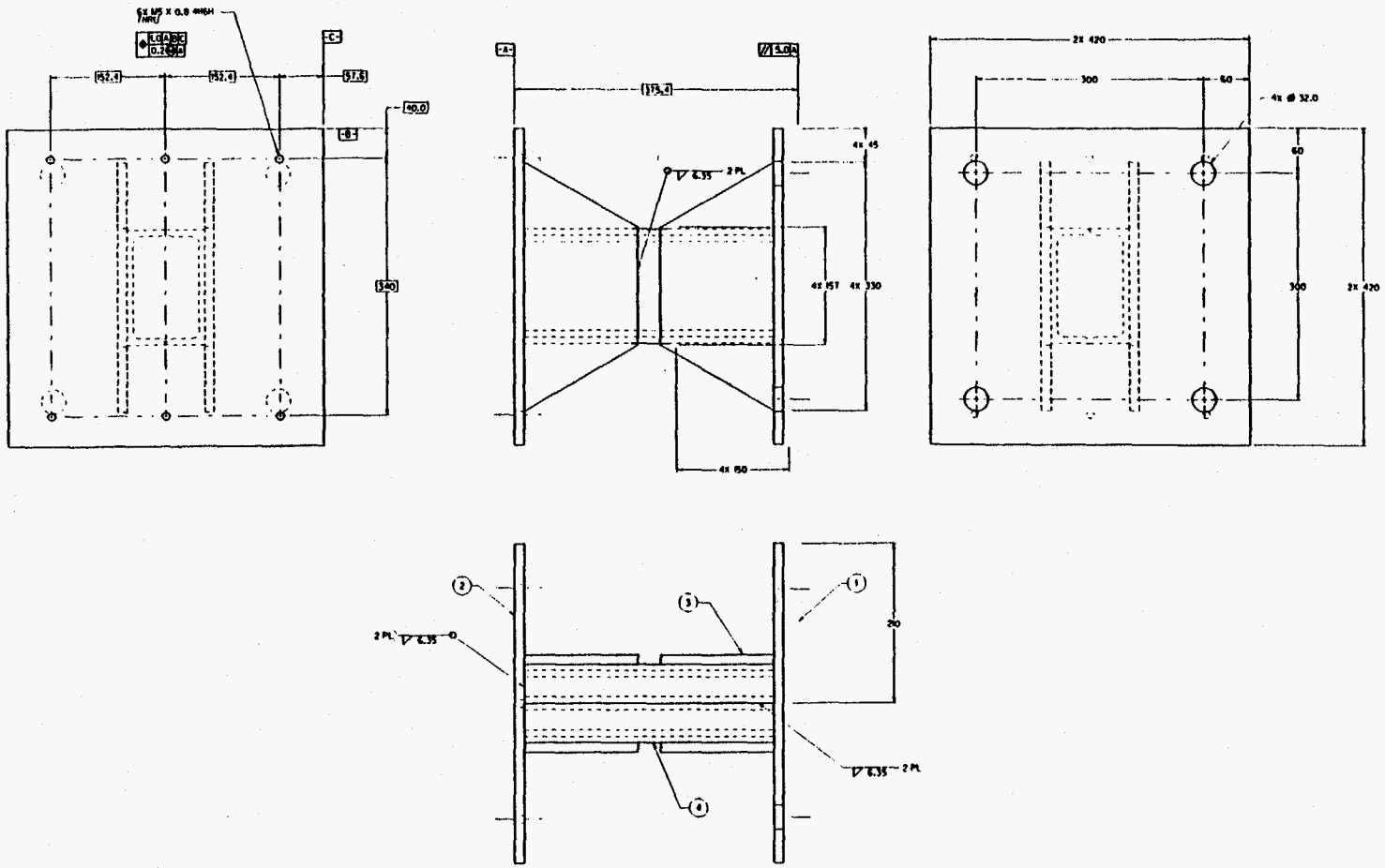

NOTES: UNLESS OTHERWISE SPECIFIED.

2. PAINT SAFETY BLUE.

1. IDENTIFY PER. SSCL SPECIFICATION P40-000136, TYPE IV.

SI METRIC

SSC

BASE SUPPORT, WELDMENT

R70-000029

REVISIONS				
ZONE	REV	DESCRIPTION	DATE	APPROVED

THIS IS A CAD GENERATED DRAWING. DO NOT MAKE MANUAL REVISIONS OR ALTERATIONS

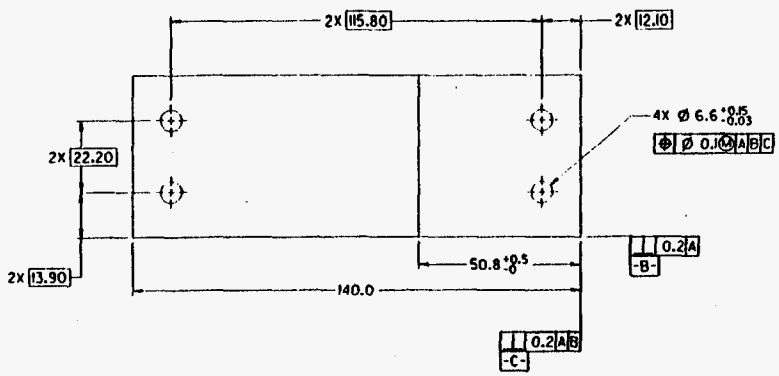

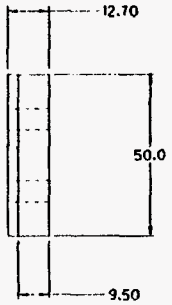

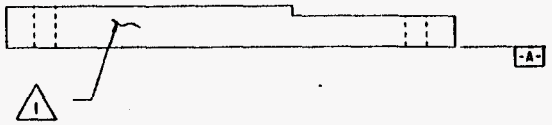

NOTES: UNLESS OTHERWISE SPECIFIED.

1 IDENTIFY PER. SSCL SPECIFICATION P40-000137, TYPE IV. LOCATE APPROXIMATELY AS SHOWN.

QTY	QTY	QTY	PART NUMBER	DESCRIPTION	CAGECO	ZONE	ITEM
		-001		BRACKET, SAE 1020 OR BETTER STEEL			
				LIST OF MATERIALS / PARTS LIST			

REF ONLY-NOT TO BE MAINTAINED		
DASH NO.	NEXT ASSY	USED ON
APPLICATION		

UNLESS OTHERWISE SPECIFIED DIMENSIONS ARE IN MILLIMETERS

TOLERANCE OF WHOLE NUMBERS ± a1

TOLERANCE OF DECIMALS

.X ±0.5 | .XX ±0.25 | ∠ ± 5°

1. BREAK ALL SHARP EDGES 0.5 MAX.
2. DO NOT SCALE THIS DRAWING.
3. DIM TO ANSI Y14.5M - 1982
4. ALL MACH SURFACES.

3.2

DRAWN	K.BRAMBLE	DATE 6/29/93
CHKR		
APPD		
APPD		
APPD		
APPD		
APPD		
APPD		

CONTRACT NO DE AC 35 89ER40486

SSC SUPERCONDUCTING SUPER COLLIDER LABORATORY 2550 BECKLEY AVENUE, SUITE 125 DALLAS, TEXAS 75237-3946

BRACKET, MOUNT, SRD

SIZE	DRAWING NO	REV
C	R70-000030	

SCALE	1:1	WEIGHT	SHEET 1 OF

REVISIONS				
ZONE	REV	DESCRIPTION	DATE	APPROVED

THIS IS A CAD GENERATED DRAWING. DO NOT MAKE MANUAL REVISIONS OR ALTERATIONS

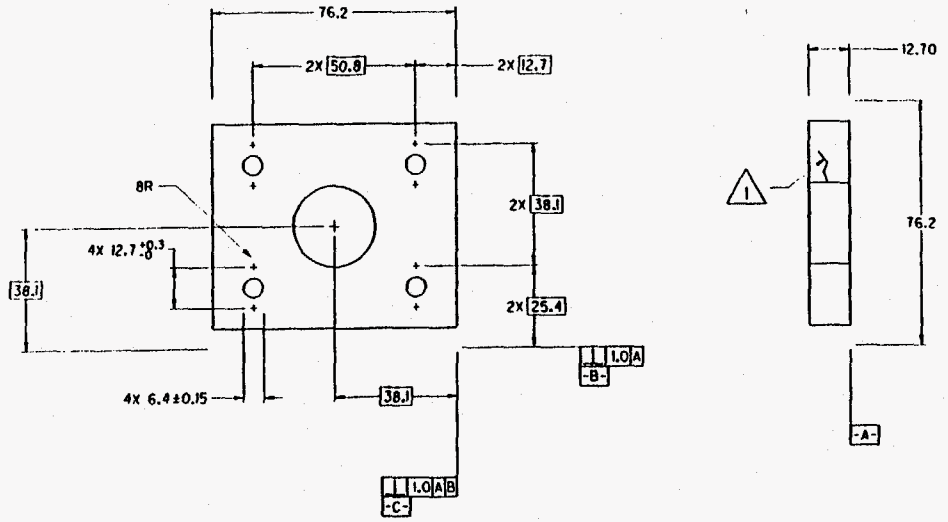

NOTES: UNLESS OTHERWISE SPECIFIED.

1. IDENTIFY PER. SSCL SPECIFICATION P40-000137. TYPE IV. LOCATE APPROXIMATELY AS SHOWN.

QTY	QTY	QTY	PART NUMBER	DESCRIPTION	CAGECO	ZONE	ITEM
		-001		PLATE, SAE 1020 OR BETTER STEEL			

LIST OF MATERIALS / PARTS LIST

REF ONLY-NOT TO BE MAINTAINED		
DASH NO.	NEXT ASSY	USED ON
APPLICATION		

UNLESS OTHERWISE SPECIFIED DIMENSIONS ARE IN MILLIMETERS

TOLERANCE OF WHOLE NUMBERS ± .5

TOLERANCE OF DECIMALS

.X ±0.5 | .XX ±0.25 | ∠ ±.5°

1. BREAK ALL SHARP EDGES 0.5 MAX.
2. DO NOT SCALE THIS DRAWING.
3. DIM TO ANSI Y14.5M - 1982
4. ALL MACH SURFACES.

3.2

DRAWN	K.Bramble	DATE 6/29/93
CHKR		
APPD		
APPD		
APPD		
APPD		
APPD		
APPD		
CONTRACT NO.	DE-AC35-89ER40486	

SSC SUPERCONDUCTING SUPER COLLIDER LABORATORY
2550 BECKLEYMEADE AVE. SUITE 125
DALLAS, TEXAS 75237-3946

PLATE, LEVELING

SIZE	DRAWING NO	REV
C	R70-000031	
SCALE 1:1	WEIGHT	SHEET 1 OF

Test Plan for SRD Chamber/Light Pipe Seal

I. Scope

This test is to determine the effectiveness of an unlubricated O-ring crush seal used against an acrylic light pipe to be used in the Synchrotron Radiation Detector of the test beam region of the SSCL. The test sequence will examine three areas of concern: a) the leak tightness of the seal design itself, b) the frictional load capacity of the O-ring seal to hold the light pipe in position against the forces of atmospheric pressure, c) any damage of the light pipe from the crush seal, specifically mechanical deformation or chemical crazing.

II. Supporting Documentation

A. Copy of the test part drawings: VAC-0001 rev. A, -0002, -0003, -0004, -0005 rev. A, and -0006.

III. Preparation

A. Inspection
Inspect all parts prior to assembly for burrs, nicks and scratches that could affect the sealing surfaces. Correct as necessary.

B. Cleaning
All parts should be cleaned prior to assembly using isopropyl alcohol and chem wipes to degrease all surfaces. Blow clean with dry nitrogen. Use gloves to prevent touching surfaces with hands after cleaning.

C. Assembly
Use gloves during assembly of O-rings and light pipe to prevent contamination of surfaces.

1. Slip O-ring over light pipe and insert into seal plate (VAC-0004) such that the end of the light pipe is below the surface of the seal plate as shown in VAC-0001. Make certain that the O-ring does not roll and is not twisted about its circumferential axis.

2. Install the PMT flange (VAC-0003) over the light pipe and tighten the screws in a star pattern in increasing steps of torque. Check the position of the light pipe recess to the seal plate as the screws are tightened and note if the light pipe moved. Final torque on the screws is to be 4.5 N-m (40 in-lbs).

3. Lubricate O-ring for back plate (VAC-0005) with silicone high vacuum grease and install. Assemble to seal plate and tighten screws in star pattern as before with final torque of 4.5 N-m (40 in-lbs).

4. Record the dimension from the end of the light pipe to the parallel surface of the PMT flange. Record the date and time.

IV. Testing

A. Leak Check

1. Connect the test fixture to the leak detector: ALCTEL ASM 110 TURBO CL in the EFD vacuum lab.

2. Pump down the system to 5*10 e-4 Torr.

3. Check the leak tightness of the assembly to helium and record the leak rate.

4. Compare the experimental data with the theoretical calculations.

B. Load Test

1. Check the dimension from the end of the light pipe to the parallel surface of the PMT flange to make certain the light pipe has not moved during the leak check test. If it has moved, note this and go to section C.

2. Place assembly in the compression testing machine with the light pipe facing up. Support the assembly such that it will be stable as compressive load is applied to the light pipe.

3. Place a 2 inch diameter, 1/8 inch thick aluminum bearing disk on the end of the light pipe. The disk should have at least a 16 mirco-inch rms finish on the side next to the light pipe.

4. Bring the head of the test machine down within 0.020" of aluminum disk. Start the test cycle and record the load at which the light pipe begins to move.

C. Damage Test--Short Term

1. Immediately after the load test above, remove the PMT flange and the light pipe from the assembly. Note the date and time.

2. Visually inspect the light pipe for signs of indentation or crazing of the light pipe and record observations.

D. Repeat Testing in sections A and B on Sample 2

1. Disassemble and clean vacuum grease from the fixture. Reassemble fixture as detailed in section III above.

2. Repeat the tests of subsections A and B as detailed in this section. DO NOT repeat subsection C, but instead proceed to subsection E below.

E. Damage Test--Long Term

1. After second load test allow fixture to sit at room temperature for a period of 6 weeks under vacuum before disassembling.

2. After the settling period has expired, remove the PMT flange and the light pipe from the assembly. Note the date and time.

3. Visually inspect the light pipe for signs of indentation or crazing and record observations.

LEAK TEST THE OF O-RING CRUSH SEAL DESIGN FOR SRD CHAMBER/LIGHT PIPE

Sanyi Zheng
Physics Research Division
EFD Vacuum Group
September 21, 1993

I. SCOPE

This test is a part of an experiment to determine the effectiveness of an un-lubricated O-ring crush seal used in conjunction with an acrylic light pipe. The light pipe is a part of a subassembly of the Synchrotron Radiation Detector to be installed in the test beam region of the SSCL. The purpose of the test is to check the leak tightness of O-ring seal design.

II. SUPPORTING DOCUMENTATION

Copy of the test part drawings: VAC-0001 rev.A, -0002, -0003, -0004, -0005 rev.A, and -0006.

III. PREPARATION

Powder free vinyl gloves were used during inspection, cleaning, and assembly to prevent contamination of the parts.

1 Inspection

Before assembly, all parts were inspected. There were no visible scratches, nicks, and burrs that affected the sealing surfaces.

2 Cleaning

All parts were chemically cleaned by using isopropyl alcohol prior to assembly. After blowing with dry nitrogen, a visual inspection was made on each part especially sealing surfaces. Any piece showing water marks, stains, or chemical residue was recleaned.

3 Assembly

a) An O-ring was slipped over the light pipe and inserted into the seal plate (VAC-0004) such that the end of the light was below the surface of the seal plate as shown in VAC-0001. The O-ring did not roll and was not twisted about its axis.

b) The PMT flange (VAC-0003) was installed over the light pipe and the screws were tightened in a cross pattern in increasing steps of torque. Checked the position of the light pipe recess to the seal plate as the screws were tightened and noted if the light pipe moved. Final torque on the screws was 4.5 N-m (40 in-lbs).

c) Lubricated O-ring for back plate (VAC-0005) with silicone high vacuum grease and installed. Assembled to seal plate and tightened screws in a cross pattern as before with a final torque of 4.5 N-m (40 in-lbs).

IV. LEAK CHECK

1 Equipment

ALCTEL ASM 110 TURBO CL Helium Leak Detector

2 Procedure

a) Connected the test fixture to the leak detector in the EFD Vacuum Lab (clean room environment)

b) Pumped system down to below $5X10^{-4}$ Torr.

c) During the leak test, the helium nozzle was directed at the gap between light pipe (VAC-0002) and PMT flange (VAC-0003), allowing helium gas to enter the gap and reach the O-ring seal.

d) Set the Helium sensitivity selector range on $3X10^{-8}$ Atm-cc/sec.

e) The test piece was sprayed with helium for 15 seconds. A positive deflection of less than 0.4 was noted on the leak detector with the range set at 10^{-8} Atm-cc/sec. The test piece is found to be leak tight

f) Disassembled and cleaned vacuum grease from the fixture. Reassembled fixture as detailed in section III above by using a new O-ring.

g) Repeated the test described in this subsection from a) through f).

V SUMMARY

1 TEST #1

Time:	13:30, September 8, 1993
Performed By:	Sanyi Zheng, Kim Chapman
Participant:	Kelly Bramble, Howard Fender, and Ken Schlindwein
Equipment:	ALCTEL ASM 110 TURBO CL Helium Leak Detector
Vacuum:	$< 1X10^{-4}$ Torr
Leak Sensitivity Selector Range:	$3X10^{-8}$ Atm-cc/sec
Background Reading from the Meter:	$0.8X10^{-8}$ Atm-cc/sec
The Reading after one minute:	$1.0X10^{-8}$ Atm-cc/sec
Deflection:	$(1.0 - 0.8)X10^{-8}$ Atm-cc/sec $= 0.2X10^{-8}$ Atm-cc/sec $< 0.4X10^{-8}$ Atm-cc/sec
Conclusion:	THE LEAK TIGHTENESS IS APPROVED

2 TEST #2

Time:	08:20, September 13, 1993
Performed By:	Sanyi Zheng, Kim Chapman
Participant:	None
Equipment:	ALCTEL ASM 110 TURBO CL Helium Leak Detector
Vacuum:	$< 1X10^{-4}$ Torr
Leak Sensitivity Selector Range:	$3X10^{-8}$ Atm-cc/sec
Background Reading from the Meter:	$0.1X10^{-8}$ Atm-cc/sec
The Reading after One Minute:	$0.3X10^{-8}$ Atm-cc/sec
Deflection:	$(0.3 - 0.1)X10^{-8}$ Atm-cc/sec $= 0.2X10^{-8}$ Atm-cc/sec $< 0.4X10^{-8}$ Atm-cc/sec
Conclusion:	THE LEAK TIGHTNESS IS APPROVED

Load and Damage Test Results for SRD Light Pipe Seal

B. Load Test

1. Verification

The dimensions from the end of the light pipe to the parallel surface of the PMT flange were re-measured and no movement of the light pipe was measured due to the vacuum loading during the leak test.

2. Setup

The light pipe assembly was placed between the compression test platens of the Instron machine of the Magnet Systems Division's Test Department. The surface finish of the platens was acceptable such that a bearing disk was not needed.

The platen was lowered and a series of compression tests were run on each sample. The load rate of the first sample was about 8.9 lbs/min up to a maximum of 300 lbs with a maximum platen travel speed of 0.020 in/min. The load rate of the second sample was increased to 20 lbs/min up to the maximum of 300 lbs and a platen speed maximum of 0.080 in/min

3. Results

a. Sample 1

On the first run, the load/deflection curve showed a steady compression of the O-ring up to 35 lbs at which there was a gross 0.015 in. movement under very little load. This is believed to be rolling of the O-ring in the groove and the deformation curves of all runs were consistent in this feature. Once the gross deflection had settled the load increased nearly linearly up to 80 lbs. at which point the test was suspended to check for permanent movement.

The second run showed a 0.005" permanent set which might have relaxed back over time. The load in this run was steadily increased until stick-slip movement of the light pipe began to take place. Stick-slip started at 115 lbs and became very prominent at the 150 lb. level.

The third run started with a 0.015 in. permanent set from the previous stick-slip motion. Stick-slip motion did not commence until 175 lbs.

b. Sample 2

On the first run the characteristic plateau of the rolling of the O-ring occurred at the same load as did sample 1. The load on this sample was increased up to 200 lbs. at which point the test was suspended to check for permanent deflection. A 0.030 in. permanent deflection was found. Since no stick-slip motion was detected during the test it is assumed that the load rate and platen travel speed were sufficiently high enough to keep the load increasing even though slippage was occurring.

The load/deflection curve was identical on the second run with the maximum load of 300 lbs. being achieved. Again a large permanent set was found upon relaxation of the load. A 0.025 in. deflection was measured.

The third run was used only to find the amount of permanent deflection incurred during the second run.

c. Conclusions of the Load Test

The load carrying capacity of the of O-ring seal agrees with the calculated estimates. It is certain to provide the capability of preventing the lightpipe from being sucked into the vacuum chamber and causing a catastrophic failure. It does not however, provide the rigidity required for precision registration of the NaI crystal or the scintillating plastic. This requires the addition of a load carrying clamp to secure the light pipe in a position whose integrity can be insured regardless of load conditions. The O-ring will undoubtedly perform its primary duty of providing a vacuum seal and will serve as a backup load carrying member should the clamp system fail.

C. Damage Test--Results--Short Term: Sample 1

1. Shortly after the load test above, the PMT flange and the light pipe were disassembled. The assembly had been together for 71 hours.

2. A visual inspection of the light pipe showed a slight signature of the location of the O-ring. The O-ring appeared to have brinnelled the surface asperities where it was installed which resulted in a better surface finish or a highly polished line where contact was made. No indentation nor any chemical crazing was observed at the O-ring location. Therefore, no short term damage was found.

D. Repeat Testing on A and B on Sample 2

1. The test fixture was disassembled and cleaned. It was reassembled per section II

above.

2. The vacuum test and load test were repeated on sample 2. The results are contained in those sections for continuity of discussion.

E. Damage Test--Results--Long Term

1. The fixture was attached to the mechanical vacuum pump in the Experimental Physics and kept under vacuum for 6 weeks and two days. During that time the SSC project was canceled (Bastards) and the fixture has set idle at room conditions for just over two and a half months.

2. Disassembly of the fixture revealed that the O-ring had adhered to the light pipe at the "foot print" of the contact area. It required very light pressure to break to the bond which revealed a bright, shinny surface similar or slightly better in finish than the original finish. On either side of the O-ring however, the surface had crazed substantially up to the points where the aluminum surfaces stopped. The crazing was heaviest adjacent to the shinny line and lessened as the edges of the aluminum were reached.

3. The vacuum side showed very little difference from the atmosphere side. The vacuum grease may have provided a surface coating that prevented crazing under the O-ring. A test of multiple O-ring compounds is in order. Sandwiching several O-rings between to acrylic plates should provide a comparison on the crazing of their inner volumes and give a suitable compound.

4. The surface of the light pipe was not indented and therefore mechanical damage of the light pipe is not an issue. The seal is successful pending an acceptable O-ring compound. This O-ring was a 75 durometer hardness and an 0-ring of 60 to 80 durometer should be mechanical adequate.

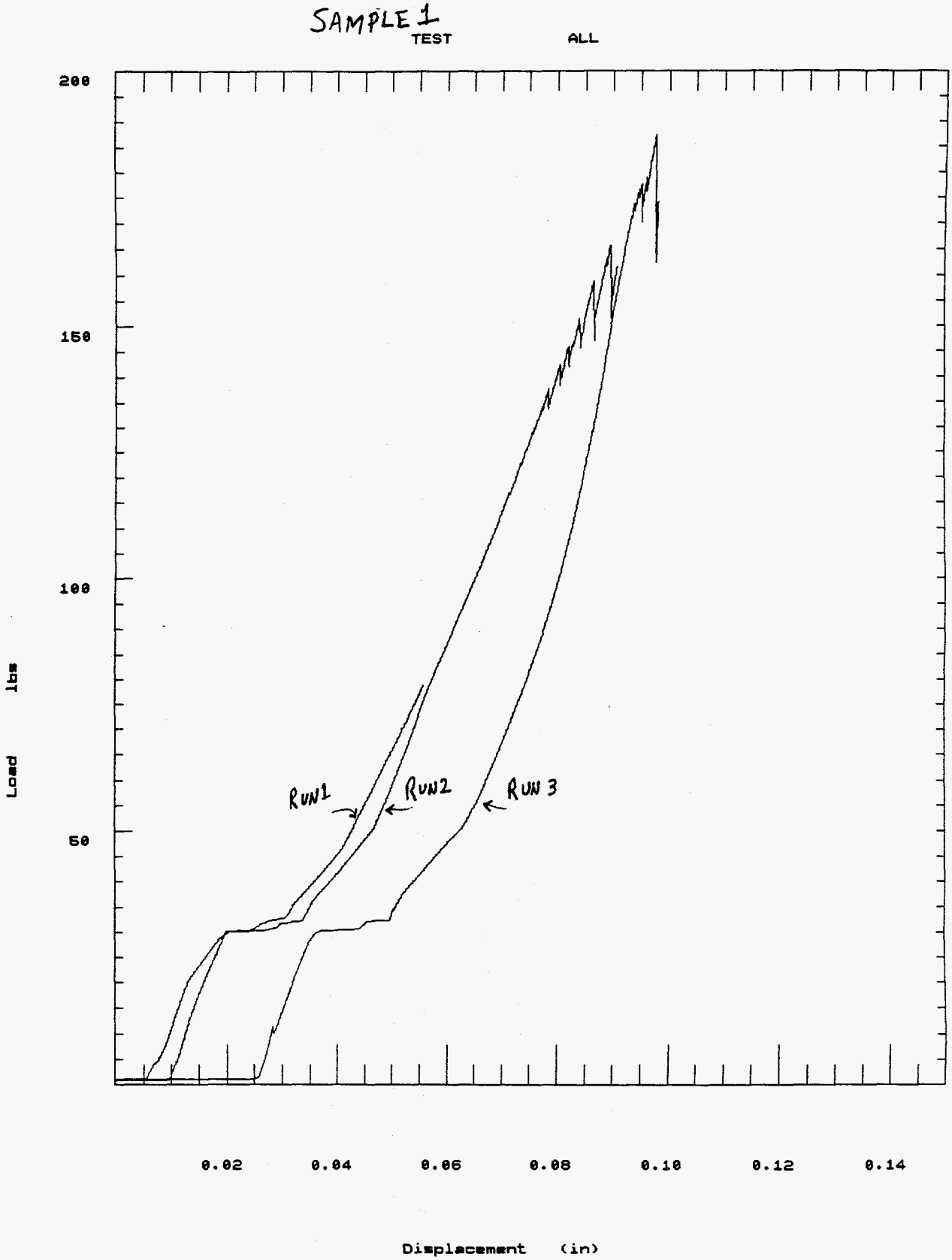
SAMPLE 1
TEST
ALL
200
150
100
50
Load lbs
RUN1
RUN2
RUN 3
0.02
0.04
0.06
0.08
0.10
0.12
0.14
Displacement (in)

SAMPLE 2

Same plot for new sample? [N]

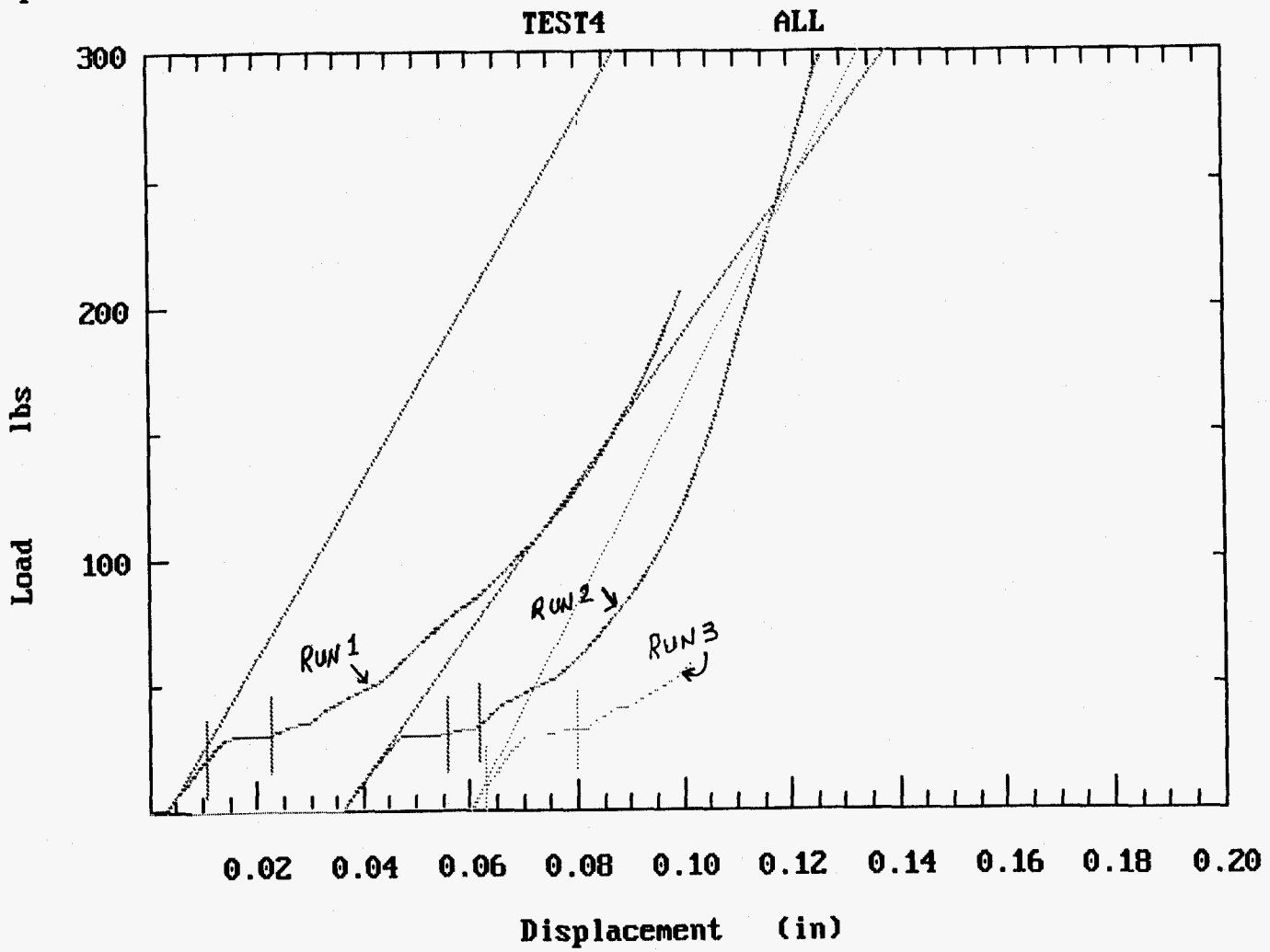

SYNCHROTRON RADIATION DETECTOR
Test Apparatus Lightpipe Seal

Directory Location - /home/nova/prd/kelly/vacuum/test

----------Files----------

File	Description
test.mod	Solid Model Assembly
vac0001	Test Fxture Assembly
vac0002	Glass Light Pipe
vac0003	Flange, PMT
vac0004	Plate, Seal
vac0005	Plate, back

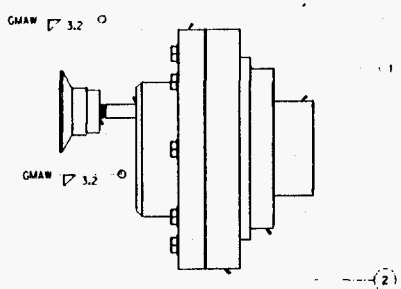

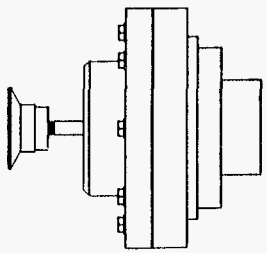

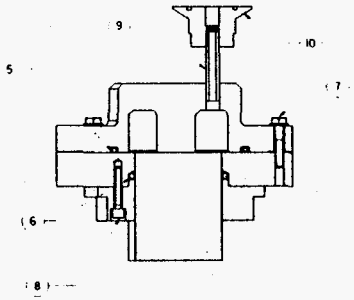

SECTION A-A

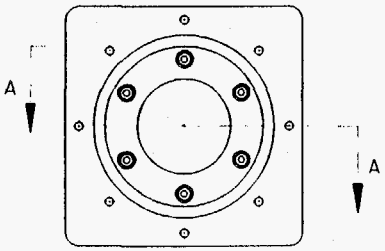

REVISIONS				
ZONE	REV	DESCRIPTION	DATE	APPROVED

THIS IS A CAD GENERATED DRAWING. DO NOT MAKE MANUAL REVISIONS OR ALTERATIONS

QTY	QTY	QTY -001	PART NUMBER	DESCRIPTION	CAGECO	ZONE	ITEM
				ISO NWG TO 1/2" NPT ADAPTER ALUMINUM			10
				1/2" NTP X 1" LENGTH EXTRENSION ALUMINUM			9
		6		M4 X 0.7 X 18 LENGTH , CAP HEAD BOLT			8
		8		M4 X 0.7 X 20 MM LENGTH, HEX WITH WASHER			7
				O-RING, PARKER I.734" I.D., 0.139" WIDTH			6
				O-RING, PARKER # 2-230 CLASS AN			5
			VAC-0005	PLATE, BACK			4
			VAC-0004	PLATE, SEAL			3
			VAC-0003	FLANGE, PMT			2
			VAC-0002	PIPE, GLASS			1

LIST OF MATERIALS / PARTS LIST

REF ONLY - NOT TO BE MAINTAINED		
	VAC-0005	
	VAC-0004	
	VAC-0003	
	VAC-0002	
DASH NO.	NEXT ASSY APPLICATION	USED ON

UNLESS OTHERWISE SPECIFIED DIMENSIONS ARE IN MILLIMETERS
TOLERANCE OF WHOLE NUMBERS ± XX
TOLERANCE OF DECIMALS
.X ±0.5 .XX ±0.25 ∠ ±1°
1. BREAK ALL SHARP EDGES 0.5 MAX.
2. DO NOT SCALE THIS DRAWING.
3. DRILL TO ANSI 118 TAP - TYP.
4. ALL MACH SURFACES. 32

DRAWN	L. DRAMBLE	DATE 7/28/93
CHK'D		
APP'D		
APP'D		
APP'D		
APP'D		
APP'D		
CONTRACT NO.	DE-AC35-89ER40486	

SSC

TEST FIXTURE, PMT O-RING

SIZE	DRAWING NO	REV
D	VAC-0001	

SCALE HALF | WEIGHT | SHEET 1 OF

SI-METRIC

2. CLEAN ALL VACUUM EXPOSED SURFACES PER. SSCL SPECIFICATION AMA-321008T.

1. USE NO GREASE ON O-RINGS.

NOTES: UNLESS OTHERWISE SPECIFIED.

REVISIONS				
ZONE	REV	DESCRIPTION	DATE	APPROVED

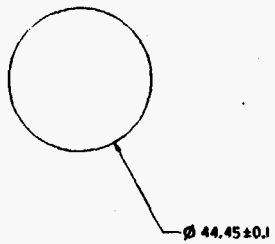

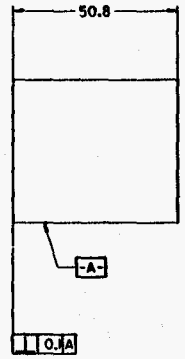

NOTES: UNLESS OTHERWISE SPECIFIED.

THIS IS A CAD GENERATED DRAWING. DO NOT MAKE MANUAL REVISIONS OR ALTERATIONS

QTY	QTY	QTY	PART NUMBER	DESCRIPTION	CAGECO	ZONE	ITEM
			-001	PIPE, PLASTIC			

LIST OF MATERIALS / PARTS LIST

REF ONLY-NOT TO BE MAINTAINED		
	VAC-0001	
DASH NO.	NEXT ASSY	USED ON
APPLICATION		

UNLESS OTHERWISE SPECIFIED DIMENSIONS ARE IN MILLIMETERS

TOLERANCE OF WHOLE NUMBERS ± .01

TOLERANCE OF DECIMALS

.X ±0.5 | .XX ±0.25 | ∠ ±.5°

1. BREAK ALL SHARP EDGES 0.5 MAX.
2. DO NOT SCALE THIS DRAWING.
3. DIM TO ANSI Y14.5M - 1982
4. ALL MACH SURFACES, 3.2

DRAWN	K.BRAMBLE	DATE 7/28/93
CHKR		
APPD		
APPD		
APPD		
APPD		
APPD		
CONTRACT NO.	DE-AC35-89ER40486	

SSC SUPERCONDUCTING SUPER COLLIDER LABORATORY
2550 BECKLEYMEADE AVE, SUITE 400
DALLAS, TEXAS 75237-3946

PIPE, GLASS

SIZE	DRAWING NO	REV
C	VAC-0002	

SCALE	WEIGHT	SHEET 1 OF
1:1		

REVISIONS				
ZONE	REV	DESCRIPTION	DATE	APPROVED

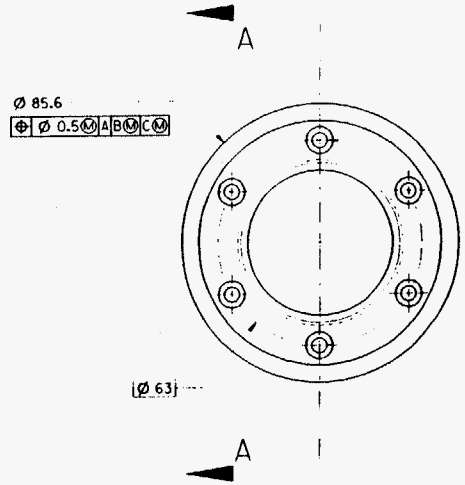

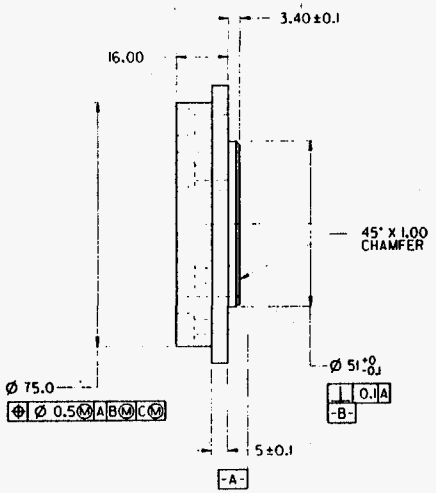

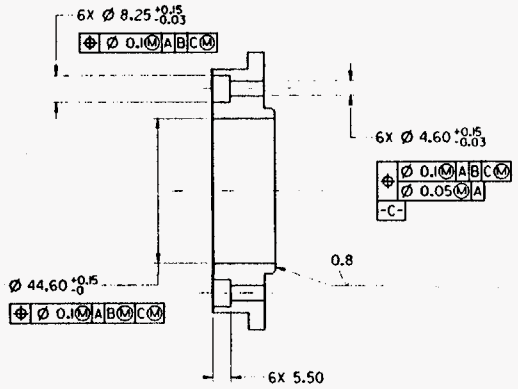

SECTION A-A

THIS IS A CAD GENERATED DRAWING. DO NOT MAKE MANUAL REVISIONS OR ALTERATIONS

QTY	QTY	QTY	PART NUMBER	DESCRIPTION	CAGECO	ZONE	ITEM
			-001	FLANGE, 6061-T6 ALUMINUM			

LIST OF MATERIALS / PARTS LIST

NOTES: UNLESS OTHERWISE SPECIFIED.

REF ONLY-NOT TO BE MAINTAINED		
	VAC-0001	
DASH NO.	NEXT ASSY	USED ON
APPLICATION		

UNLESS OTHERWISE SPECIFIED DIMENSIONS ARE IN MILLIMETERS

TOLERANCE OF WHOLE NUMBERS ± 1

TOLERANCE OF DECIMALS

.X ±0.5	.XX ±0.25	∠ ±.5°

1. BREAK ALL SHARP EDGES 0.5 MAX.
2. DO NOT SCALE THIS DRAWING.
3. DIM TO ANSI Y14.5M - 1982
4. ALL MACH SURFACES. 3.2

DRAWN	K.BRAMBLE	DATE 7/28/93
CHKR		
APPD		
APPD		
APPD		
APPD		
APPD		
APPD		
CONTRACT NO.	DE-AC35-89ER40486	

SSC SUPERCONDUCTING SUPER COLLIDER LABORATORY
2550 BECKLEY MEADE AVE. SUITE 125
DALLAS, TEXAS 75237-3946

FLANGE, PMT

SIZE	DRAWING NO	REV
C	VAC-0003	

SCALE 1:1 | WEIGHT | SHEET 1 OF 1

A-94

REVISIONS				
ZONE	REV	DESCRIPTION	DATE	APPROVED

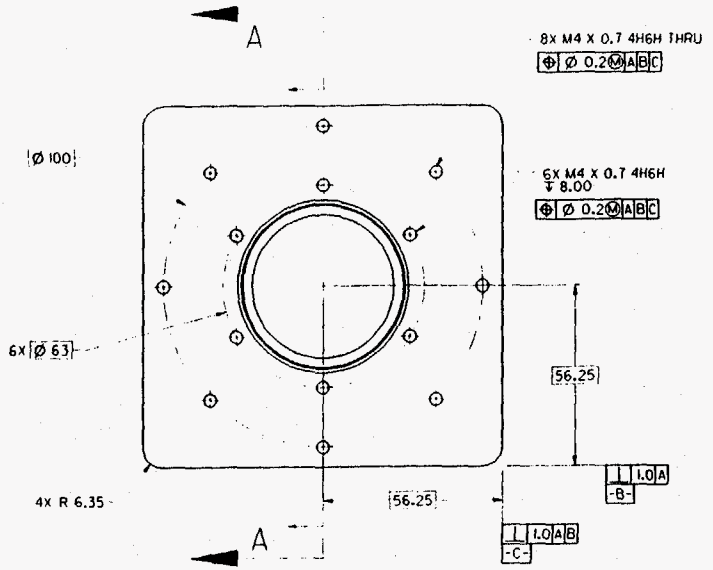

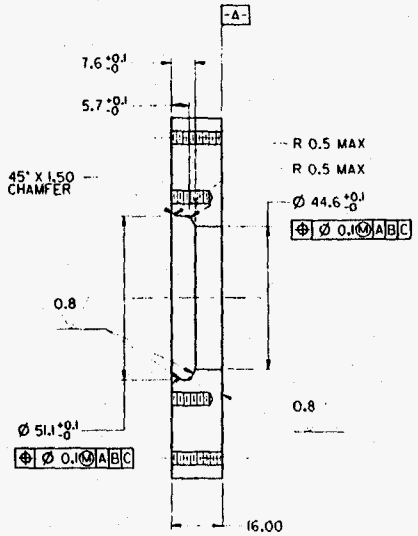

SECTION A - A

THIS IS A CAD GENERATED DRAWING. DO NOT MAKE MANUAL REVISIONS OR ALTERATIONS

QTY	QTY	QTY	PART NUMBER	DESCRIPTION	CAGECO	ZONE	ITEM
			-001	PLATE, 6061-T6 ALUMINUM			

LIST OF MATERIALS / PARTS LIST

REF ONLY-NOT TO BE MAINTAINED		
	VAC-0001	
DASH NO.	NEXT ASSY	USED ON
APPLICATION		

UNLESS OTHERWISE SPECIFIED DIMENSIONS ARE IN MILLIMETERS

TOLERANCE OF WHOLE NUMBERS ± .1

TOLERANCE OF DECIMALS

.X ±0.5 | .XX ±0.25 | ∠ ±.5°

1. BREAK ALL SHARP EDGES 0.5 MAX.
2. DO NOT SCALE THIS DRAWING.
3. DIM TO ANSI Y14.5M - 1982
4. ALL MACH SURFACES.

3.2 ✓

DRAWN	K.BRAMBLE	DATE 7/28/93
CHKR		
APPD		
APPD		
APPD		
APPD		
APPD		
CONTRACT NO.	DE-AC35-89ER40486	

SSC SUPERCONDUCTING SUPER COLLIDER LABORATORY
2550 BEECHLEY WOODS AVE, SUITE 125
DALLAS, TEXAS 75237-3946

PLATE, SEAL

SIZE	DRAWING NO	REV
C	VAC-0004	

SCALE	1:1	WEIGHT	SHEET 1 OF 1

NOTES: UNLESS OTHERWISE SPECIFIED.

REVISIONS				
ZONE	REV	DESCRIPTION	DATE	APPROVED

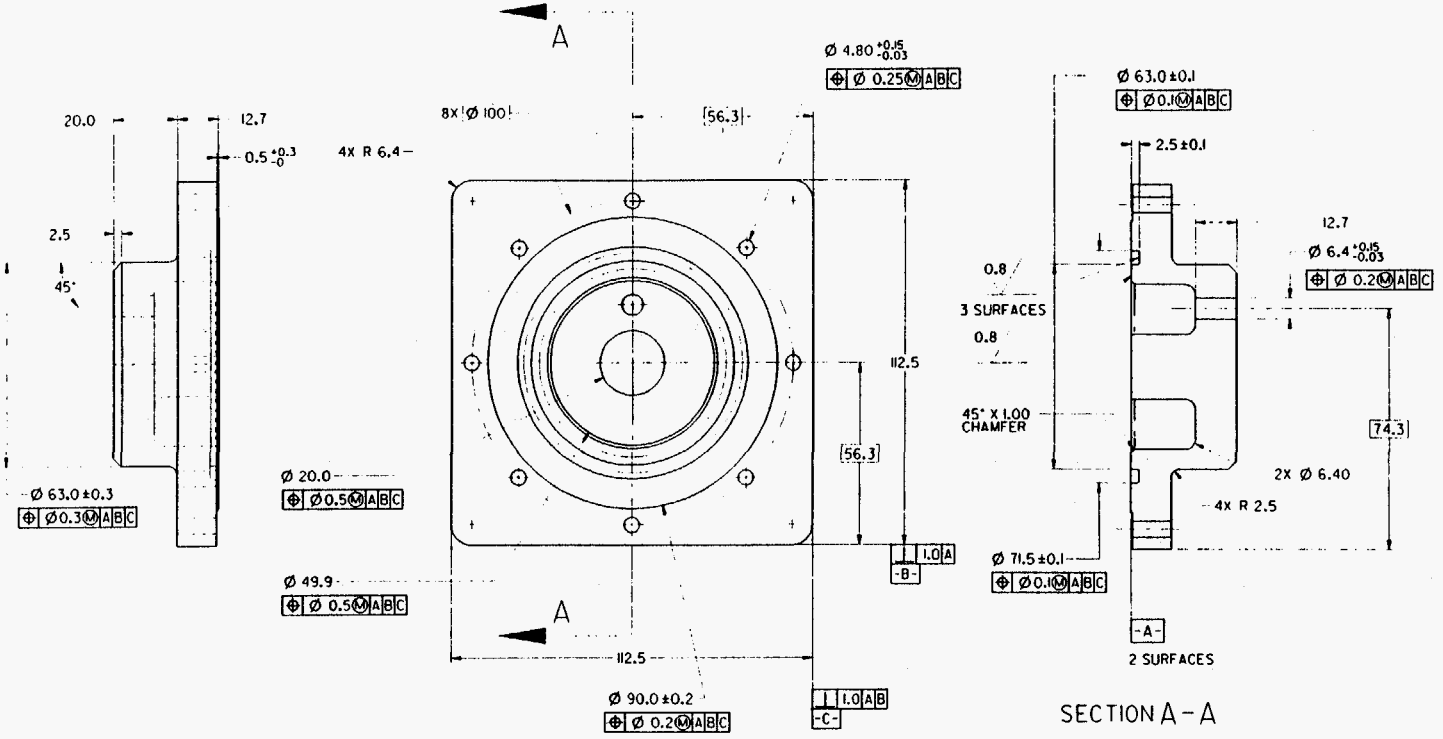

SECTION A-A

THIS IS A CAD GENERATED DRAWING. DO NOT MAKE MANUAL REVISIONS OR ALTERATIONS

QTY	QTY	QTY	PART NUMBER	DESCRIPTION	CAGECO	ZONE	ITEM
			-001	PLATE, 6061-T6 ALUMINUM			

LIST OF MATERIALS / PARTS LIST

NOTES: UNLESS OTHERWISE SPECIFIED.

REF ONLY-NOT TO BE MAINTAINED		
	VAC-0001	
DASH NO.	NEXT ASSY	USED ON
APPLICATION		

UNLESS OTHERWISE SPECIFIED DIMENSIONS ARE IN MILLIMETERS

TOLERANCE OF WHOLE NUMBERS ± ±1

TOLERANCE OF DECIMALS

.X ±0.5 | .XX ±0.25 | ∠ ±.5°

1. BREAK ALL SHARP EDGES 0.5 MAX.
2. DO NOT SCALE THIS DRAWING.
3. DIM TO ANSI Y14.5M - 1982
4. ALL MACH SURFACES. 3.2

DRAWN	K.BRAMBLE	DATE 7/28/93
CHKR		
APPD		
APPD		
APPD		
APPD		
APPD		
APPD		
CONTRACT NO.	DE-AC35-89ER40486	

SSC SUPERCONDUCTING SUPER COLLIDER LABORATORY
2550 BECKLEYMEADE AVE. SUITE 125
DALLAS, TEXAS 75237-3946

PLATE, BACK

SIZE	DRAWING NO	REV
C	VAC-0005	

SCALE 1:1 | WEIGHT | SHEET 1 OF 1