ORNL/TM-13526

OAK RIDGE NATIONAL LABORATORY

LOCKHEED MARTIN

Programmatic and Technical Requirements for the FMDP Fresh MOX Fuel Transport Package

S. B. Ludwig
R. D. Michelhaugh
R. B. Pope
L. B. Shappert
B. H. Singletary
S. M. Chae
C. V. Parks
B. L. Broadhead
S. P. Schmid
C. G. Cowart

Transportation & Packaging Technologies Team
Fissile Materials Disposition Program

MANAGED AND OPERATED BY
LOCKHEED MARTIN ENERGY RESEARCH CORPORATION
FOR THE UNITED STATES
DEPARTMENT OF ENERGY

ORNL/TM-13526
Dist. Category UC-523

Chemical Technology Division

PROGRAMMATIC AND TECHNICAL REQUIREMENTS FOR THE FMDP FRESH MOX FUEL TRANSPORT PACKAGE

S. B. Ludwig
R. D. Michelhaugh
R. B. Pope
L. B. Shappert
B. H. Singletary
S. M. Chae
C. V. Parks
B. L. Broadhead
S. P. Schmid*
C. G. Cowart*

*Science Applications International Corp.

Date Published: December 1997

Prepared by
OAK RIDGE NATIONAL LABORATORY
Oak Ridge, Tennessee 37831
managed by
LOCKHEED MARTIN ENERGY RESEARCH CORP.
for the
U.S. DEPARTMENT OF ENERGY
under contract DE-AC05-96OR22464

Page Intentionally Blank

CONTENTS

LIST OF FIGURES

Page Intentionally Blank

LIST OF TABLES

Page Intentionally Blank

ACRONYMS

ALARA	as low as reasonably achievable
ANSI	American National Standards Institute
ASME	American Society of Mechanical Engineers
ASTM	American Society of Testing and Materials
BF	Type B, fissile–designation for a Type B package that may carry fissile material
BWR	boiling-water reactor
CFR	*Code of Federal Regulations*
c.g.	center of gravity
CRNL	Chalk River Nuclear Laboratory
DNFSB	Defense Nuclear Facilities Safety Board
DOE	U.S. Department of Energy
DOE/AL	U.S. Department of Energy, Albuquerque Operations Office
DOE/MD	U.S. Department of Energy, Office of Fissile Materials Disposition
DOE/OR	U.S. Department of Energy, Oak Ridge Operations Office
DOT	U.S. Department of Transportation
FEA	finite element analysis
FMDP	Fissile Materials Disposition Program
GVW	gross vehicle weight
HAC	Hypothetical Accident Conditions (10 CFR 71.73)
HLW	high-level waste
IAEA	International Atomic Energy Agency
IMO	International Maritime Organization
INF	irradiated nuclear fuel
k_{eff}	the effective neutron multiplication factor, a measure of nuclear criticality
LEU	low enriched uranium
LWR	light-water reactor
MFFP	MOX fresh fuel package
MOX	mixed-oxide (generally, for reactor fuels that combine UO_2 and PuO_2)
MT	metric ton (or tonne)
NCT	Normal Conditions of Transportation (10 CFR 71.71)
NIST	National Institute of Standards and Technology
NRC	U.S. Nuclear Regulatory Commission
ORNL	Oak Ridge National Laboratory
PAS	Program Acquisition Strategy (for MOX Fuel Fabrication and Irradiation Services)
PCV	primary containment vessel
PWR	pressurized-water reactor
QA	quality assurance
ROD	Record of Decision
SARP	safety analysis report for packaging
SGT	safeguards transport (secure trailer)
SNL	Sandia National Laboratories
SNM	special nuclear material
SSNM	strategic special nuclear materials
SST	safe secure trailer
TI	Transport Index
TSD	Transportation Safeguards Division, DOE Albuquerque Operations Office
WG	weapons-grade

Page Intentionally Blank

ACKNOWLEDGMENT

The authors would like to recognize the support of Erv Copus, Larry Luna, Joe Roesch, and John Moyer of Sandia National Laboratories, Albuquerque, in providing information about the dimensions, load capacity, loading, and package securement in safe secure trailers.

Page Intentionally Blank

EXECUTIVE SUMMARY

In January 1997, the U.S. Department of Energy (DOE) issued a Record of Decision outlining the plan and methods that DOE will use to dispose of surplus weapons-grade (WG) plutonium. A dual-track approach was announced whereby the surplus plutonium would be either converted to mixed-oxide (MOX) fuel and irradiated in commercial power reactors or immobilized with high-level waste. Some scenarios show that as much as 33 metric tons (MT) of the 50 MT of surplus WG plutonium may be converted to MOX fuel for irradiation and disposal.

This document is intended to guide the designers of the package to all pertinent regulatory and other design requirements to help ensure the safe and efficient transport of the WG fresh MOX fuel under the Fissile Materials Disposition Program.

To accomplish the disposition mission using MOX fuel, the unirradiated MOX fuel must be transported from the MOX fabrication facility to one or more commercial reactors. Because the unirradiated fuel contains large quantities of plutonium and is not sufficiently radioactive to create a "self-protecting" barrier to deter the material from theft, DOE intends to use its fleet of safe secure trailers (SSTs) to provide the necessary safeguards and security for the material in transit. In addition to these requirements, transport of radioactive materials must comply with regulations of the Department of Transportation and the Nuclear Regulatory Commission (NRC). In particular, NRC requires that the packages must meet strict performance requirements. The requirements for shipment of MOX fuel (i.e., radioactive fissile materials) specify that the package design is certified by NRC to ensure the materials contained in the packages are not released and remain subcritical after undergoing a series of hypothetical accident condition tests. Packages that pass these tests are certified by NRC as a Type B fissile (BF) package.

This document specifies the programmatic and technical design requirements a package must satisfy to transport the fresh MOX fuel assemblies.

Programmatic requirements for the new fresh MOX fuel package state that the package shall be

- compatible with and shall efficiently use available payload capacity of the SST and
- operationally compatible with the MOX fuel fabrication and reactor facilities in which it will be used.

Technical design requirements for the new fresh MOX fuel package state that

- the package shall be certified by NRC as a Type BF material package in accordance with requirements prescribed in 10 *Code of Federal Regulations* (CFR) 71;
- the package design shall have one verifiable level of containment for the package contents, testable to a level of 10^{-6} A_2/h [10 CFR 71.51(a)(1)] and 1.0 A_2/week [10 CFR 71.51(a)(2)]; and
- the package shall be so designed to maintain subcriticality of the fissile contents under the hypothetical accident conditions in 10 CFR 71.

Page Intentionally Blank

PROGRAMMATIC AND TECHNICAL REQUIREMENTS FOR THE FMDP FRESH MOX FUEL TRANSPORT PACKAGE

S. B. Ludwig
R. D. Michelhaugh
R. B. Pope
L. B. Shappert
B. H. Singletary
S. M. Chae
C. V. Parks
B. L. Broadhead
S. P. Schmid
C. G. Cowart

ABSTRACT

This document is intended to guide the designers of the package to all pertinent regulatory and other design requirements to help ensure the safe and efficient transport of the weapons-grade fresh mixed-oxide fuel under the Fissile Materials Disposition Program.

---

1. GENERAL INFORMATION

1.1 BACKGROUND

On January 14, 1997, the Department of Energy (DOE) announced the formal Record of Decision (ROD) for the storage and disposition of weapons-usable fissile materials.[1] The ROD follows the December 9, 1997, release of the *Storage and Disposition of Weapons-Usable Fissile Materials Final Programmatic Environmental Impact Statement*,[2] which contained DOE's preferred alternative for disposition of surplus fissile materials. In that ROD, DOE decided to pursue a strategy for plutonium disposition that allows for immobilization of some of the surplus weapons plutonium in glass or ceramic forms and irradiation of the remaining surplus plutonium as mixed-oxide (MOX) fuel in existing reactors; it reserved the option to immobilize all the surplus weapons-usable plutonium. DOE also decided that the extent to which either or both of these disposition approaches would ultimately be deployed would depend in part on a future National Environmental Policy Act (NEPA) review, although DOE committed to immobilize at least 8 metric tons (MT) of the currently declared surplus plutonium.

To pursue the MOX fuel portion of the dual approach, the ROD stated that the United States would pursue the use of domestic light-water reactors (LWRs) to irradiate the MOX fuel assemblies. Thus, an integral part of the MOX fuel approach is acquisition of MOX fuel fabrication and reactor irradiation services from the private sector. As indicated in its announcement in the *Commerce Business Daily* (March 24, 1997), DOE prefers to use a single consortium to provide all services.[3] As outlined in the *Program Acquisition Strategy for Obtaining Mixed Oxide (MOX) Fuel Fabrication and Reactor Irradiation Services (PAS)*,[4] released on July 17, 1997, DOE provided a description of the technical approach it intends to use to implement fuel fabrication, reactor irradiation, and associated services.

In the PAS, DOE provided certain assumptions and outlined various responsibilities that would be undertaken by DOE and by the selected consortium. With regard to transportation of plutonium, DOE stated the following assumption: "Plutonium oxide and unirradiated MOX fuel elements will be transported by DOE via Safe Secure Trailers (SSTs)."[4] The PAS also provided an assumption of the fraction of the roughly 50 MT of surplus plutonium that would become feed material for the MOX fuel disposition approach:

> The amount of feed material for the reactor disposition mission is expected to be about 33 MT but may vary from 22–40 MT. Plutonium feed materials will be made available starting in 2004 for a dry (also known as hydride) chemical process at a rate of approximately 3.5 MT/year to be added to the inventory of other oxides available at that time.

With regard to responsibilities, the PAS stated that DOE would

> (1) Provide a certified package design for the transport of fresh MOX fuel from the MOX fuel fabrication facility to the reactor sites, and
> (2) Transport plutonium oxide powder to the MOX fuel fabrication facility and transport fresh fuel assemblies between the fuel facility and the reactors.

The PAS stated that the consortium would "Procure and maintain fresh MOX fuel transportation packages."

According to the PAS, the consortium would be required to propose a reactor loading schedule such that the first MOX core reloads would be inserted into a reactor on or before 2007. In addition, DOE intends that at least 1 MT of plutonium oxide from the hydride process would be available at the beginning of 2004 to facilitate the commencement of domestic fabrication of "lead assemblies." At some point (between 2004 and 2007), either lead MOX assemblies or MOX core reloads will be manufactured and would need to be transported. Because of a paucity of transport packages certified in the United States to transport fresh MOX fuel, DOE has assigned the Oak Ridge National Laboratory (ORNL) the responsibility to develop and certify a new package design for the transport of MOX fuel assemblies. This will allow MOX shipments to commence at the ealiest possible date (2004), and no later than 2007.

1.2 MISSION STATEMENT

In issuing the ROD on January 14, 1997, DOE set into motion a series of engineering, design, and demonstration activities at DOE's national laboratories that support the Office of Fissile Materials Disposition to ensure that the necessary facilities and infrastructure are available to carry out the disposition of ~50 MT of plutonium during the next few decades (either through immobilization or irradiation as MOX fuel).

To accomplish the weapons-usable plutonium disposition mission, the MOX fuel assemblies must be transported in Nuclear Regulatory Commission (NRC)-certified Type B, fissile (BF) material packages between the MOX fabrication facility (tentatively assumed to be located at either Hanford, Idaho National Engineering and Environmental Laboratory, Savannah River Site, or the Pantex Plant) and one or more existing commercial LWR sites in the United States. A Type B package is required because there will be many times an A_2 quantity of plutonium in each fresh (unirradiated) fuel assembly. Additionally, because of security requirements, DOE will use SSTs as the transportation conveyance for the MOX fuel packages.

1.3 INTRODUCTION

The Fissile Materials Disposition Program (FMDP) is tasked with the development of technologies and equipment necessary to implement the disposition of ~33 MT of weapons-usable plutonium as MOX fuel. Disposition of plutonium as MOX fuel in commercial LWRs involves many different material transfers between facilities, using an assortment of certified radioactive material packages. The task discussed here involves the development of an NRC-certified BF material package for transport of fresh MOX fuel assemblies for operation in pressurized-water reactors (PWRs) and boiling-water reactors (BWRs). This package must be certified by NRC for off-site transportation of fissile materials, as prescribed in Department of Transportation [49 *Code of Federal Regulations* (CFR) 171 through 178][5] and NRC (10 CFR 71)[6] regulations.

1.4 PACKAGE SYSTEM DESCRIPTION

The packaging system involves a description of the packaging, packaging components, operational features, and contents of the packaging. In addition, interface requirements imposed on the packaging by the shipping and receiving sites may be significant.

1.4.1 Package Components

Two preliminary packaging concepts are under consideration. Both preliminary concepts are roughly cylindrical in shape and are expected to carry four PWR or eight BWR fresh fuel assemblies.

The first packaging concept is designed to be transported horizontally and loaded/unloaded vertically. Once vertical, the upper-end cover of the packaging is removed for loading/unloading operations, and the MOX fuel assemblies are then lowered into the cylinder and clamped in place. The lower end of the cylinder will also be removable to facilitate maintenance and cleaning of the package when needed. This conceptual design has the advantage that the sealing system used on the end closure has been minimized and is easy to seal and maintain. A potential disadvantage for this concept is that in some power plant fuel-handling facilities, the fuel may have to be lifted to higher elevations during unloading than would be required for packages designed for lateral loading/unloading.

In the second preliminary conceptual design, the basic fuel packaging is divided longitudinally, resulting in a much longer and irregular-shaped sealing system. The advantage of this system is that the top half of the packaging can be lifted off while the bottom half remains horizontal. Then only the internal structural support system needs to be rotated to a vertical position to load and unload the fuel assemblies. This concept has the advantage of being similar to current low-enriched uranium (LEU) fuel packages. In addition, this concept permits the MOX fuel to be handled at the same elevations currently used for LEU fuel assemblies, about 1 to 2 m, during unloading.

Any special tools that must be used to load, unload, or move the package at the site will be designed in conjunction with the design of the package. Any special fixtures needed to load, unload, upend, or move the package at the site will be designed in conjunction with the design of the package.

1.4.2 Package Contents

The fresh fuel package will be used to transport MOX fuel that is estimated to contain between 18.4 kg and 25.4 kg of plutonium per PWR assembly, or between 2.4 kg and 4.7 kg of plutonium per BWR assembly (see Sect. 3.1.3 for additional details on the contents). Thus, based on the preliminary concepts, one package could contain between 73.6 and 101.6 kg of plutonium in PWR assemblies or between 19.2 and 37.6 kg of plutonium in BWR assemblies. While specific fuel assembly designs have not been identified, the final fuel assembly dimensions will have to be consistent with the fuel assemblies currently in use in U.S. reactors. Appendix A provides a summary of the fuel assembly characteristics to establish a preliminary design envelope for the fresh MOX fuel package.

1.4.3 Package Operational Features

Because of the large quantity of plutonium that will be contained in each package and because the plutonium in the package is a Category IID material (see DOE Order 5633.3B),[7] the shipments are expected to be made in an SST or a later version identified as a safeguards transport (SGT). Details of these trailers are given in Appendix B. Because of the way in which these transport systems are operated and the Transportation Safeguards Division (TSD) security associated with MOX fuel, close attention needs to be paid to the interface requirements at both shipping and receiving sites.

1.4.4 Package Interfaces

As previously noted, the SST/SGT must interface with both the shipping and receiving site. In addition, the MOX fuel assembly package shall interface with the MOX fuel fabrication facility

handling equipment, the SST/SGT transport vehicles, and the reactor site's fuel handling equipment. Details of the SST/SGT interface requirements are described in Appendix B. Details of the fuel handling operations interface requirements are described in Appendix C.

1.4.5 Packaging Procedures

The procedures for utilitizing the packaging must (1) ensure that the package is handled in such a manner that it is not damaged and remains certified, (2) ensure that personnel exposure to radiation remains as low as reasonably achievable (ALARA), and (3) provide loading, unloading, and decontamination information in sufficient detail to verify interfaces with the MOX fuel assembly fabrication facilities and the nuclear power plant equipment. Procedures for acceptance testing and maintenance must also be provided.

1.5 PACKAGE DESIGN SCOPE

This document specifies the design requirements for a package for the off-site shipment of MOX fuel assemblies. These requirements must address (1) the packaging interface with MOX fuel fabrication and associated power plant handling systems, (2) the packaging interface with the SST/SGT, and (3) the interface of the SST/SGT with the shipping and receiving facilities. These requirements also address the handling and transport environments associated with fuel assembly shipment to safely permit shipment of the MOX fuel assemblies. A series of regulatory tests are specified to demonstrate satisfactory performance of the packaging according to these requirements. Finally, the packaging must be designed for a 30-year life.

1.6 DEFINITIONS

The term "packaging" refers to the container and all associated attached components as described in the application for packaging certification to NRC. The term "package" refers to the packaging and its authorized contents.

1.7 PACKAGE DESIGN AND ACQUISITION

Figure 1 shows the process involved in design, development, and certification for packaging.

1.8 RELATIONSHIP OF PROGRAMMATIC AND TECHNICAL REQUIREMENTS

Chapter 2 provides a summary of programmatic requirements that gives an overview of how DOE intends to transport fresh MOX fuel using its SSTs.

Chapter 3 provides detailed technical requirements for the design, development, testing, certification, and use of the new fresh MOX fuel package. The technical requirements are based on the applicable regulations and DOE Orders and on current knowledge concerning the fuel that is expected to be shipped in the packagings and the facilities in which the packages are expected to be used.

In addition to Chap. 3, this document includes the following appendixes that support the conceptual design envelope:

- Appendix A—MOX FUEL ASSEMBLY DESCRIPTION
- Appendix B—SST/SGT DESCRIPTIONS
- Appendix C—MOX FUEL-HANDLING OPERATIONS
- Appendix D—OTHER MOX FUEL PACKAGES
- Appendix E—SAFEGUARDS AND SECURITY INFORMATION
- Appendix F—PRELIMINARY DESIGN CONCEPTS
- Appendix G—PLUTONIUM DISPOSITION SHIPMENT STRATEGIES
- Appendix H—DOMESTIC AND INTERNATIONAL TRANSPORT REGULATIONS

- Appendix I—SAFE TRANSPORT OF RADIOACTIVE MATERIALS

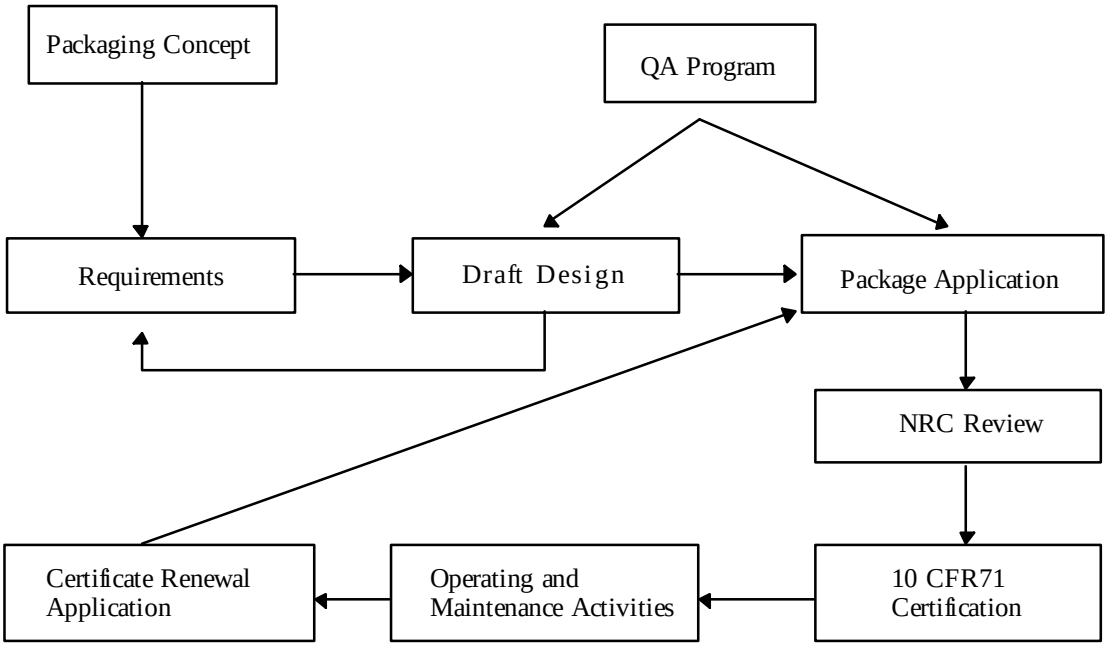

Fig. 1. Package design, development, and certification process.

Page Intentionally Blank

2. PROGRAMMATIC REQUIREMENTS

2.1 REQUIREMENTS

As described in the PAS, DOE plans to enter into contracts with a private-sector consortium that will design and manufacture fresh MOX fuel assemblies containing fissile plutonium recovered from U.S. nuclear weapons program activities.[4] The consortium will provide commercial nuclear power reactor irradiation services for the MOX fuel, thereby rendering it proliferation resistant (i.e., self-protecting). DOE's objective is to provide safe, permanent, and secure disposition of excess plutonium.

Because of the need to provide a high level of physical security in transportation of unirradiated MOX fuel assemblies, the baseline concept is that DOE will be the exclusive, specialized carrier, transporting fresh MOX nuclear fuel by truck in SSTs. The transportation will occur from a consortium-operated, NRC-licensed fresh MOX fuel fabrication facility located at a DOE-managed site to a NRC-licensed commercial nuclear power plants. History shows that developing and obtaining NRC certification of a new package design requires typically 5 to 7 years. To ensure timely availability of the necessary packagings, DOE has tasked ORNL with developing requirements and concepts for a new fresh MOX fuel package. Early development efforts give DOE a 2-year head start on package development as insurance against potential delays.

Programmatic requirements for the new fresh MOX fuel package are that the package shall be:

1. compatible with and shall efficiently use available payload capacity of the SST,
2. certified by NRC as a BF material package in accordance with requirements prescribed in 10 CFR 71, and
3. operationally compatible with the MOX fuel fabrication and reactor facilities in which it will be used.

The SST use specified in the first programmatic requirement is imposed because the fresh MOX fuel is classified as DOE Category IID, from a physical protection, safeguards, and security standpoint (DOE Order 5633.3B), due to the quantity of plutonium and its attractiveness. The requirement to efficiently use available payload capacity is imposed to minimize operational costs and to assist in reducing risks of accidents (by reducing number of shipments). Use of the SST and the TSD tracking/courier system for these shipments also reduces risks during transport because of the added security of the SST itself and the close controls over the shipment provided by the TSD system, which enhances emergency response should an emergency occur.

The second programmatic requirement is necessary because both the shipping and receiving sites are intended to be NRC licensed. Also, by using NRC-certified BF material packages, some operational requirements for SSTs (e.g., those related to securing the package in the SST) will be alleviated.

The third programmatic requirement is established to reduce the likelihood for facility modifications and to ensure that the facilities in which the package will be used can handle receipt of the fresh MOX fuel. Plant modifications cannot be fully identified until the material disposition program matures and the consortium and its facilities are selected. While it is expected that DOE will maintain the certificate for the package, the consortium will be responsible for (1) becoming registered users of DOE's fresh MOX fuel package and (2) purchasing and maintaining sufficient packagings to meet the anticipated delivery schedule. Although an estimate of the cost to purchase each package has not been developed, prospective bidders should use an estimate of $100,000 per package for bidding purposes.

During FY 1998, it is intended that alternatives to the use of the SST and the TSD system will be explored as alternatives to the baseline configuration. The goal here will be to quantify opportunities for designing and implementing an SST alternative that will be more cost-effective and operationally efficient. The procurement and certification of foreign packagings and the possibility of designing a new system tailored to the needs and safeguards classification of the fresh MOX fuel will be explored.

2.2 PROGRAMMATIC GOALS

The goals of the fresh MOX fuel package design activity are to

1. minimize potential design or operational changes to the reactors to be used by the consortium, including safety issues that necessitate minimizing the distance that the fresh MOX fuel assembly is lifted above the floor to mitigate consequences of a handling accident; and
2. design and field a package that has as low as possible gross weight (to meet the SST limits) and that exhibits the ability to survive the regulatory Normal Conditions of Transportation (NCT) and Hypothetical Accident Conditions (HAC) while ensuring that the package design satisfies the regulatory acceptance requirements of (a) providing adequate containment with a testable containment seal, (b) limiting external radiation levels to regulatory limits, and (c) ensuring criticality control.

In the long term, to satisfy the programmatic requirements and goals specified, DOE anticipates that it will enter into an operating agreement for the transportation services with the consortium; this agreement will specify the understandings between DOE and the consortium regarding exchanges of shipment information, operating responsibilities, shipment scheduling, and other topics necessary for effective coordination of shipping activities. Except for MOX package ownership costs, DOE currently anticipates that DOE funds will be used to pay the full cost of the MOX fuel transportation services that it provides. In addition, DOE does not anticipate any transfers of unirradiated MOX fuel assemblies from the commercial reactor plant to other sites, except for returns of defective unirradiated MOX fuel assemblies to the consortium-operated MOX fuel fabrication plant (discussed in Sect. 3.6). Should such transfers take place, the consortium will coordinate with DOE to arrange for necessary transportation services.

DOE recognizes that current operations at commercial nuclear power plants that involve receiving and handling of LEU fuels are likely to change from those that will be necessary for the consortium's MOX fuels. Nonetheless, it is expected that the commercial nuclear power plant owner will take possession of the MOX fuel assemblies and will handle them according to applicable law, state and local statutes and regulations, and federal regulations (including NRC regulations) and in conformance with plant technical specifications and procedures. The consortium will be responsible for preparing and obtaining approvals of any and all safety analyses, permits, technical specifications, and procedures that are necessary to address safety, strategic special nuclear material (SSNM) safeguards and security, and other regulatory or statutory requirements associated with MOX fuel assembly receiving and handling. DOE intends to enter into an operating agreement with the consortium that will establish assignments of responsibilities; organizational relationships; operating policies, protocols, and procedures; and information exchanges that will be necessary to coordinate SST physical security and delivery operations and plant safeguards and security and receiving operations.

2.3 OPERATIONAL ELEMENTS

The following provides information regarding the FMDP's operational elements for use of its MOX transportation system to pick up, transport, and deliver unirradiated MOX nuclear reactor fuel to commercial nuclear power plants. This concept of operations characterizes interfaces between DOE's MOX fuel transportation system, the MOX fuel fabrication plant, and the mission nuclear power plants including

1. DOE's SST vehicles,
2. associated transportation physical security operations,
3. the MOX transportation package, and
4. the consortium's nuclear fuel-handling operations and associated storage facilities.

Finally, the descriptions and information provided in this report are based on current law and policies of the U.S. Government, including DOE policies and orders and federal, state, and local regulations.

3. TECHNICAL REQUIREMENTS

3.1 GENERAL DESIGN REQUIREMENTS

This section provides the broad specifications for a package designed to contain and transport fresh MOX fuel that will ultimately be placed in specifically chosen PWR and BWR commercial reactors. At this time, the reactors and sites have not been chosen; therefore, the packaging specifications must remain somewhat flexible because the package design may be influenced by those choices. As overall programmatic decisions are made, the following package specifications can be narrowed further.

3.1.1 Primary Design Goals

The package shall be designed to maximize the number of fresh fuel assemblies that can be carried. Specifically, the goal shall be to carry four PWR or eight BWR fuel assemblies per package in an SST. The capacity of the package will be affected by the weight limitations and size constraints imposed by the SST restrictions identified in Appendix B. Capacity may also be influenced by size, weight, and other physical limitations imposed by the receiving reactor sites.

A means of securing the fuel assemblies within the packaging to prevent movement during transport shall be provided. Close attention shall be paid to the requirement of double containment of fuels that contain plutonium and to maintaining subcriticality if the shipment is exposed to severe accident conditions.

The package shall be designed to load and unload the fuel vertically and to ship it horizontally. The packaging shall include mechanical features to aid in upending the structural support for the fuel assemblies during loading/unloading operations.

The package shall be designed to have a 30-year lifetime.

3.1.2 Regulatory Requirements

The package design shall be certified as a Type B(U)F. Thus, the design must meet the requirements imposed by current versions of 10 CFR 71 (“Packaging and Transportation of Radioactive Materials”) and 49 CFR 173 Subpart I (“Radioactive Materials”). In addition, applicable requirements from DOE Orders 460.1A, 460.2, and 5632.1C shall apply.[8–10] Because of federal security requirements applied to the transport of significant quantities of plutonium, the fresh MOX fuel assemblies must be transported to a reactor site in an SST (see Appendix E). This package shall not be transported by air; thus, the requirements of 10 CFR 71.64 (special requirements for plutonium air shipments) and 49 CFR 173.410(I) (general design requirements for transport by air) shall not apply.

Because the package will contain more than 20 Ci of plutonium, this material must be protected by at least two lines of containment [see 10 CFR 71.63(b)]. However, because the fuel pellets will be sealed within fresh fuel pins whose integrity will have been evaluated and confirmed, the fuel pin constitutes one line of containment [see 10 CFR 71.63(b)(1)], and the package itself provides the second line of containment.

In meeting the federal regulations previously cited, it may be desirable to also meet certain applicable regulatory guides published by NRC and other appropriate standards such as those published by the American National Standards Institute (ANSI) and the American Society of Mechanical Engineers (ASME).

Appendix H provides a discussion of the possible need to address and make international shipments as well as the regulatory implications of such shipments.

3.1.3 Package Contents

Until the specific PWR and BWR reactors that will receive the MOX fuel assemblies are selected, the packaging shall be designed to contain fuel assemblies that are within the size envelope of reactors that will be considered. These assemblies are identified in Sect. 2.2 of DOE/RW-0184-R12, Vol. 1 (July 1992).[11]

The package shall be designed to contain fuel assemblies having radionuclide contents as follows:

1. each PWR assembly will contain between 18.4 kg and 25.4 kg of plutonium; and
2. each BWR assembly will contain between 2.4 kg and 4.7 kg of plutonium, where a typical isotopic mixture of plutonium nuclides will be ^{236}Pu—>1 ppb, ^{238}Pu—0.03 wt %, ^{239}Pu—92.2 wt %, ^{240}Pu—6.46 wt %, ^{241}Pu—0.05 wt %, ^{242}Pu—0.1 wt %, and ^{241}Am—0.9 wt %.

The activity values specified in Table A-1 of 10 CFR 71 shall be used to determine the radioactivity of plutonium in each fuel assembly.

3.1.4 Interface Requirements

The package shall be designed to interface with the physical limitations of typical shipping and receiving sites, with any vehicle that may be used to transport it (on-site or off-site), and with any unique handling, moving, or positioning equipment identified as being required. Special equipment may be required to handle or operate the package.

3.1.4.1 Fuel fabrication plant interface

The package shall be designed to interface with the plant(s) that will fabricate the fresh MOX fuel. These plant(s) have not been identified at this time, but based on an examination of some fuel fabrication plants, it is unlikely that any unusual physical restrictions would be placed on the packaging design by that facility. Details of the fuel-handling operations interface requirements for a fuel fabrication plant are described in Appendix C.

3.1.4.2 SST/SGT interface

For security reasons, the package shall be designed to be transported in an SST or an SGT. The general dimensional, weight, radiation level, and thermal load restrictions of the SST are identified in Appendix B. The SST and SGT have standardized tie-down hardware that can be located at specific points and that may influence the tie-down design of the package. Tie-down rings attached to the vehicle are capable of resisting a force of 2270 kg (5000 lb).

3.1.4.3 Power plant interface

The power plants that the fresh MOX fuel package must interface with have not been identified at this time. However, based on examination of the receiving areas of typical PWR and BWR reactor sites, it is apparent that each reactor may have size and weight limitations that affect the packaging design. These limitations will become definable once the specific reactors are identified. Because the reactor site may not have an area suitable for receiving an SST/SGT containing the fuel, a platform or other equipment may be needed to load/unload the packages from the transport vehicle. A detailed description of this equipment is not covered in this document but will evolve as more becomes known about the receiving site.

Details of the fuel-handling-operations interface requirements for power plants are discussed in Appendix C. Appendix C data were derived in part from information developed for DOE and reported in site and facility waste transportation planning documents (SPDs) [see "Site and Facility Waste Transportation Planning Documents Status and Findings"[12] and ORNL/TM-13427, *Transportation and Packaging Issues Involving the Disposition of Surplus Plutonium as MOX Fuel in Commercial LWRs.*[13]]

3.1.5 Additional Package Requirements

In addition to meeting NRC and DOT requirements for a fresh fuel packaging capable of transporting plutonium, the packaging must have some required operational capabilities. These requirements are identified in this section.

The sealing system shall be equipped with a method of confirming that the seal is in place and properly seated and the package meets all applicable certification requirements before the package is placed in a trailer for shipment (see Sect. 3.1.2).

The internal structure of the packaging is used to hold, support, and fasten the MOX fuel assemblies in a specific position relative to the main body of the package. Fuel positions designed in the package are expected to be separated one from another by structural members and neutron poison materials that will keep the contents below the subcriticality requirements specified in the regulations. Each fuel position shall provide a mechanism such that, once an assembly has been placed in position, it will be secured and properly supported along its length under normal conditions of transport. This structure shall be designed to accept and discharge fuel vertically (the normal method of handling assemblies), yet capable of being rotated to a horizontal position within the package for shipment.

The package shall be transported by SST or SGT. Because these trailers are loaded through rear doors, the package and its related handling equipment shall be compatible with this method of loading. The equipment shall permit the package to be positioned side-to-side and front-to-back within the trailer and then tied down at a specific location to achieve the proper axle weight loading for transport.

Tie-down attachment points shall be provided on the package; these should, at a minimum, be compatible with tie-down hardware found on SSTs and SGTs and meet the requirements of ANSI N14.2.[14] Tie-downs shall incorporate a quick-connect/quick-release device to allow rapid securing and release of the package.

The packaging shall incorporate hardware, fasteners, seals, service access, and other features that will contribute to ALARA by promoting rapid handling, high reliability, self-orienting components, and other similar features.

Movement of the packaging in the SST or SGT will be accomplished without using powered devices (e.g., fork lifts).

3.2 PACKAGE DESIGN CONDITION REQUIREMENTS

In addition to satisfying the general design requirements specified in 49 CFR 173.410 and 10 CFR 71.43, the package design shall satisfy the design condition requirements for both NCT and HAC and the associated acceptance criteria specified in the regulations. Although the NCT and HAC are specified as test conditions, compliance may be demonstrated either by subjecting a specimen or scale model to the specific tests or by other methods of demonstration, such as analyses or reasoned evaluations, which are judged to be acceptable to NRC [49 CFR 173.461 and 10 CFR 71.41(a)].

3.2.1 Normal Conditions of Transport

The package shall be designed to be capable of withstanding the NCT tests specified in 49 CFR 173.465 and 10 CFR 71.71 so that the leakage and external radiation level requirements of 49 CFR 173.412(j), 10 CFR 71.43(f), and 10 CFR 71.51(2)(1) are satisfied. In addition, because the contents are fissile, the package shall be designed to be capable of withstanding the NCT tests specified in 49 CFR 173.465 (“Type A Packaging Tests”) and 10 CFR 71.71 (“Normal Conditions of Transport”) while remaining subcritical as specified in 10 CFR 71.55(d) (“Requirement for Fissile Material Packages”).

3.2.1.1 Ambient thermal conditions

Containment and shielding features of the package design shall be maintained for package temperatures ranging from –40°C (–40°F) to 70°C (158°F), where special attention shall be given to degradation of packaging materials [see 49 CFR 173.412(c)]. In addition, compliance with test conditions and acceptance criteria shall be demonstrated for ambient conditions ranging from –29°C (–20°F) to 38°C

(100°F), where still air and shade are considered for the lowest temperature condition and solar insolation is considered for the highest temperature condition [10 CFR 71.71(b) and (c)].

3.2.1.2 External and internal pressure

The package design shall be evaluated against differences between internal and external pressure, as noted by an external pressure reduced to 25 kPa absolute (3.5 $lb_f/in.^2$) and an external pressure increased to 140 kPa absolute (20 $lb_f/in.^2$) [49 CFR 173.412(f) and 10 CFR 71.71(c)(3) and (4)].

3.2.1.3 Vibration

The package design shall be evaluated against vibration normally incident to highway transportation [49 CFR 173.410(f) and 10 CFR 71.71(5)]. At a minimum, the package shall be designed to meet the environment described in 49 CFR 178.608.

3.2.1.4 Water spray

The package shall be designed to resist the effects of water spray that simulates exposure to rainfall of ~5 cm/h (2 in./h) for at least 1 h [49 CFR 173.465(b) and 10 CFR 71.71(c)(6)].

3.2.1.5 Free drop

Two separate drop test requirements shall be satisfied.

For the first drop test requirement, the package shall be designed to survive a free drop onto a flat, essentially unyielding, horizontal surface [49 CFR 173.465(c)(1) and 10 CFR 71.71(c)(7)]. For this test, the package shall strike the surface in a position for which maximum damage to the safety features of concern is expected. Because the structure of the package is to be stainless steel (see Sect. 3.3.1.1), the drop tests need not be immediately preceded by the water spray test [49 CFR 173.465(b) and 10 CFR 71.71(c)(7)] [i.e., reasoned evaluations that the water spray would not affect the behavior of the package in the drop test shall suffice (see Sect. 3.2.1.4)]. The height of the drop depends on the gross weight of the package as shown in Table 1.

Table 1. Drop test requirements

Package weight [kg (lb)]	Free drop distance [m (ft)]
Less than 5,000 (less than 11,000)	1.2 (4)
5,000 to 10,000 (11,000 to 22,000)	0.9 (3)
10,000 to 15,000 (22,000 to 33,100)	0.6 (2)
Greater than 15,000 (greater than 33,100)	0.3 (1)

For the second drop test requirement, the package shall be designed to survive a series of drop tests from 0.3 m (1 ft) onto each corner of the package. This series of tests shall be performed before the specified drop test [49 CFR 173.465(c)(2)].

3.2.1.6 Compression

For packages less than 11,000 lb the package shall be designed to survive compression loading, for a period of at least 24 h, equivalent to the greater of either five times the mass of the package or the equivalent of 13 kPa (1.9 $lb_f/in.^2$) multiplied by the vertically projected area of the package [49 CFR 173.465(d) and 10 CFR 71.71(c)(9)].

3.2.1.7 Penetration

The package shall be designed to withstand the impact of a 3.2-cm-diam (1.25-in.) steel bar with a hemispherical end and a mass of 6 kg (13.2 lb), dropped from a height of 1 m (3.3 ft). DOT specifies that the longitudinal axis of the bar shall be vertical [49 CFR 173.465(e)], whereas NRC specifies that the longitudinal axis of the bar shall be perpendicular to the package surface at the point of impact [10 CFR 71.71(c)(10)]. In addition, DOT specifies that it shall be dropped onto the center of the weakest part of the specimen so that, if it penetrates far enough, it would hit the containment system [49 CFR 173.465(e)]; whereas NRC specifies that it shall be dropped onto the exposed surface of the package that is expected to be most vulnerable to puncture [10 CFR 71.71(c)(10)]. Thus, pending discussions with the U.S. regulators and resolution of these differences, the most damaging situation in each case shall be considered.

In performing the assessment for the test, the package specimen shall be positioned on a rigid (essentially unyielding for this test), flat horizontal surface. The bar that is dropped on the package specimen may not be significantly deformed by the test [49 CFR 173.465(e)].

3.2.2 Lifting and Tie-Down Conditions

3.2.2.1 Lifting conditions

Any lifting attachment that is a structural part of the package shall be designed with a minimum safety factor of 3 against yield. The design shall be such that any lifting attachments on the package will not fail when used in the intended manner and that, if failure of the attachments should occur, the ability of the package to meet other requirements shall not be impaired [49 CFR 173.410(b) and 10 CFR 71.45(a)]. Consideration shall be given to applying the requirements of ANSI N14.6, "Special Lifting Devices for Shipping Containers Weighing 10,000 Pounds (4,500 kg) or More."[15] The ANSI N14.6 requirements for critical loads do not apply.

3.2.2.2 Tie-down conditions

Any tie-down device that is a structural part of the packaging shall be capable of withstanding, without generating stress in any material of the package in excess of its yield strength, a static force applied to the center of gravity (c.g.) of the package having (1) a vertical component of 2 times the weight of the package, (2) a horizontal component along the direction of travel of 10 times the weight of the package, and (3) a horizontal component in the transverse direction of 5 times the weight of the package. Any tie-down attachments on the package shall be so designed that, under both normal and accident conditions, the forces in those attachments shall not impair the ability of the package to meet the requirements of the regulations [10 CFR 71.45(6)]. Consideration shall be given to applying ANSI N14.2, "Tiedowns for Transport of Fissile and Radioactive Material Containers Greater Than One-Ton, Truck Transport."

The tie-down chains (i.e., that equipment which is used to attach the package to the vehicle and which is not considered a structural part of the package) shall be capable of withstanding, without generating stress in excess of its yield strength, a static force applied to c.g. of the package having (1) a vertical component of 2 times the weight of the package, (2) a horizontal component along the direction of travel of 2 times the weight of the package, and (3) a horizontal component in the transverse direction of 2 times the weight of the package. The force on any single tie-down chain shall not exceed 2270 kg (5000 lb.)

The tie-down system shall be tested for its ability to perform as designed before use in an SST or an SGT.[16]

3.2.3 Hypothetical Accident Conditions

The package shall be designed to be capable of withstanding the HAC tests specified in 10 CFR 71.73 so that the leakage and external radiation level requirements of 10 CFR 71.51(a)(2) are satisfied. In addition, because the contents are fissile, the package shall be designed to be capable of withstanding the HAC tests specified in 10 CFR 71.73 while remaining subcritical as specified in 10 CFR 71.55(e). As

specified in 10 CFR 71.73(a), the HAC evaluation shall be based upon a sequential application of the tests in the order indicated in Sects. 3.2.3.2 through 3.2.3.4, whereas a separate undamaged package specimen may be evaluated for the water immersion test (Sect. 3.2.3.6).

3.2.3.1 Initial test conditions

Except for the immersion tests, the package shall be evaluated for HAC with ambient air temperatures before and after the test remaining constant at values between –29°C (–20°F) to 38°C (100°F). The temperature chosen within this range shall be that which is most unfavorable for the feature under consideration [10 CFR 71.73(b)]. The applicable initial conditions for evaluating the package design performance under the HAC tests of ambient temperature, insolation, decay heat, internal pressure, and fabrication stresses (as appropriate for the fresh MOX fuel package) shall be selected using the guidance provided in *NRC Regulatory Guide 7.8.*[17]

3.2.3.2 The free drop test condition

The package is designed to survive a free drop from a distance of 9 m (30 ft) onto a flat, essentially unyielding, horizontal surface [10 CFR 71.73(b)(1)]. For this test, the package shall strike the surface in a position for which maximum damage to the safety features of concern is expected.

3.2.3.3 The puncture drop test condition

The package shall be designed to survive a free drop through a distance of 1 m (40 in.) onto the upper end of a solid, vertical, cylindrical, mild steel bar. The bar shall be mounted with its longitudinal axis vertical on an essentially unyielding horizontal surface. The bar shall be 15 cm (6 in.) in diameter, with the top horizontal and with its edge rounded to a radius of not more than 6 mm (0.25 in.). The bar shall have a length sufficient to cause maximum damage to the package [10 CFR 71.73(b)(3)].

3.2.3.4 The thermal test condition

The package shall be designed to survive exposure for 30 min to a fully engulfing (except for a simple support system) hydrocarbon fuel/air fire. The fire shall be of sufficient extent, and in sufficiently quiescent ambient conditions, to provide an average emissivity coefficient of at least 0.9, with an average flame temperature of at least 800°C (1475°F). Any other test that provides the equivalent total heat input to the package and provides a time-averaged environmental temperature of 800°C (1475°F) shall be acceptable. Additional requirements for surface absorptivity coefficient, fuel source used, positioning of package in the test, and artificial cooling after cessation of the test as specified in 10 CFR 71.73(b)(4) shall be satisfied.

3.2.3.5 Fissile material immersion test condition

The package shall be designed to remain subcritical with water in-leakage. Thus, the evaluation of the package (following the sequential exposure of the package specimen to the free drop, puncture, and thermal test conditions defined in Sects. 3.2.3.2 through 3.2.3.4) for immersion under a head of water of at least 0.9 m (3 ft.) shall not be required [10 CFR 71.73(a) and 10 CFR 71.73(c)(5)].

3.2.3.6 General immersion test condition

The package shall be designed to survive immersion under a head of water of at least 15 m (50 ft) [10 CFR 71.73(c)(6)].

3.2.3.7 Crush test condition

Because the package will exceed a weight of 500 kg (1100 lb), the crush test specified in 10 CFR 71.73(c)(2) does not apply.

3.3 STRUCTURAL DESIGN CRITERIA

3.3.1 General

General structural analytical procedures for the packaging shall follow those identified in *NRC Regulatory Guide 7.6*.[18]

3.3.2 Material Properties

Materials of construction for all structural parts of the packaging shall be austenitic stainless steel. These materials shall be certified and traceable to standards of the National Institute of Standards and Technology. Bolting materials shall also be fabricated from austenitic stainless steel; for these items, consideration shall be given to material ductility, strength, toughness, resistance to fatigue, corrosion, wear, creep, and galling. Containment materials shall be purchased to ASME Boiler and Pressure Vessel Code Sect. III requirements.[19] Other materials shall be purchased to American Society of Mechanical Engineers (ASTM) specifications, where available and appropriate. All special materials, such as those associated with criticality safety, shall be qualified before use.

Nonmetallic material properties shall either be verified by test or certified by the manufacturer as meeting the design requirements and/or specifications.

3.3.3 Containment Boundary

Under the NCT conditions summarized in Sect. 3.2 and elaborated on in *NRC Regulatory Guide 7.8*, the packaging containment boundary shall be analyzed in accordance with the guidance and criteria noted in the *NRC Regulatory Guide 7.6*.

Under the HAC conditions summarized in Sect. 3.2.3 and elaborated on in *NRC Regulatory Guide 7.8*, the packaging containment boundary shall be analyzed in accordance with the guidance and criteria noted in the *NRC Regulatory Guide 7.6*. Following the hypothetical accident, the package must not allow leakage from its containment boundary in excess of limits in 10 CFR 71.53, using guidance and criteria of ANSI Standard N14.5.[20]

Components within the containment boundary that are important to criticality safety shall retain their designed geometric relationship with the MOX fuel assemblies when the package is subjected to HAC.

3.3.4 Remainder of Packaging

The remainder of the packaging system consists of internal structural component and vibration damping components, as well as ancillary lifting and tie-down equipment. Analyses of these systems shall follow accepted industry practices and applicable regulatory guidelines.

3.3.5 Experimental Stress Analysis (Testing)

Experimental stress analysis or testing is permitted as a reasonable substitute or as a method for providing collateral support for analytical methods of analysis. This may apply to the entire MOX fuel assembly packaging or to any component of the packaging. [See the *NRC Regulatory Guide 7.6* and 49 CFR 173.461 and 173.462.]

3.4 NUCLEAR DESIGN CRITERIA

3.4.1 Criticality Safety

With due consideration for weight and other structural integrity requirements, the packaging will be designed to allow a maximum number of the specified MOX assemblies (see Sect. 3.1) while ensuring that subcriticality can be demonstrated for the single-package evaluations required by 10 CFR 71.55 and for the array of packages required by 10 CFR 71.59. These evaluations will assume preferential water-flooding of

all void spaces, the most reactive credible configuration consistent with NCT and HAC, and full reflection of the package by water. Full reflection of the containment system will be considered in the evaluation of 10 CFR 71.55(b)(3). The Transport Index (TI) based on nuclear criticality control will be determined per the criteria of 10 CFR 71.59 and in no case shall exceed 100. However, because the focus is on maximizing individual package payload and exclusive use shipments are anticipated, no special effort will be made to limit TI in the design process.

In general the model development, analyses, and documentation used for the criticality safety evaluation will be performed using the guidance provided in NUREG/CR-5661, *Recommendations for Preparing the Criticality Safety Evaluation of Transportation Packages.*[21] An Upper Subcritical Limit (USL) per the methodology of NUREG/CR-6361, *Criticality Benchmark Guide for Light-Water-Reactor Fuel in Transportation and Storage Packages,*[22] will be determined assuming a 5% margin of subcriticality.

The packaging will be designed so that no loss of contents exceeds that permitted by 10 CFR 71.51 from the package under NCT or HAC. Thus, criticality safety related to such conditions will not be considered.

3.4.2 Shielding

The packaging will be designed such that the radiation dose limits specified under 49 CFR 173.412(j), 49 CFR 173.441, 10 CFR 71.47, 10 CFR 71.51(a)(1), and 10 CFR 71.51(a)(2) are not exceeded under NCT and HAC. ALARA principles shall be considered in the design of the MOX fuel assembly packaging. Application of the ALARA principles is to include consideration of handling of the MOX fuel assemblies during loading and unloading.

3.4.3 Heat Management

The MOX fuel assembly packaging shall be designed and the contents so limited as to satisfy the thermal conditions of 49 CFR 173.442 (DOT) and the external surface temperature limits of 10 CFR 71.43(g) (NRC). Both external and internal decay heat shall be considered in the analysis. Enclosed transportation in the SST or SGT is the normal transportation environment.

The MOX fuel assembly package design shall be evaluated under the HAC as defined in Sect. 3.2.3. There shall be no reduction in nuclear criticality safety as a result of the accident thermal conditions. Both external heat and internal decay heat shall be considered in the analysis.

3.5 OPERATIONAL AND TRANSPORTATION INTERFACE REQUIREMENTS

In addition to other design requirements, package design shall allow for loading and unloading in a manner that promotes keeping personnel doses ALARA.

3.5.1 Design Requirements Related to Package Loading Characteristics

Each package opening shall have a tamper-proof security seal.

Any fasteners, adapters, or other hardware on the packaging designed for routine operations shall be the quick-release type whenever this is compatible with the other design requirements.

The MOX fuel assembly packaging shall be designed to permit rapid loading and unloading of the fuel assembly contents in the vertical position.

The MOX fuel assembly packaging should be equipped with appropriate plumbing or fittings to allow for rapid leak-testing of the containment and rapid and reliable internal atmospheric sampling prior to unloading.

The MOX fuel assembly packaging should be equipped with sensitive “shock-indicators” (tattle-tales) to warn the receivers before unloading or opening the package that abnormal transportation conditions may have been encountered and that there could be potential packaging or contents damage.

The MOX fuel assembly packaging containment should be designed to allow shipment under a slight vacuum (28–29 in. mercury absolute pressure at 68°F) and to permit leak-testing by helium tracer gas methods.

The MOX fuel assembly package should be stable in both the horizontal (transportation) and the vertical (loading/unloading) positions. In the vertical position the loaded package should resist tip-over when a side static load of 0.2 g is applied at c.g. of the package when it is in position for unloading. The use of external supports is acceptable when the package or its internal support structure is in the vertical position.

3.5.2 Design Requirements Related to Package Unloading

The MOX fuel assembly packaging shall be designed to be operated using typically available hand tools, a minimum of special tools, and the smallest possible work crew.

The interior and exterior surfaces shall, to the extent practical, be made of smooth impervious materials and not have any unnecessary crevices or protuberances to avoid the retention of water or other contaminants. Also, this design will promote easy radiological surveying, decontamination, or general cleaning of the MOX fuel assembly packaging.

To the extent practical, the openings into the MOX fuel assembly packaging interior should allow "hands-on" grappling of fuel and visual confirmation that the fuel assembly has been secured by the fuel grapple.

3.5.3 Design Requirements Related to Package Transportation

The MOX fuel assembly package will have clearly marked locations to attach quick-release tie-down straps or chains. The MOX fuel assembly package supports shall incorporate wheels, casters, or sliding pads to allow easy positioning inside the SST or SGT.

3.6 IN-SERVICE INSPECTION / MAINTENANCE REQUIREMENTS

The MOX fuel package design shall incorporate features and hardware that permit objective evaluation of package condition and compliance while reducing personnel doses to ALARA.

3.6.1 Periodic Inspection Requirements

Objective acceptance or rejection criteria for packaging appearance shall be developed that will indicate a potential for noncompliance conditions (i.e., size and depth of surface dents before repair or refurbishment is required). All fasteners, gaskets, and seals shall be inspected and replaced as necessary before each loading operation.

3.6.2 Annual Inspection Requirements

The package design shall allow for completion of all requirements for annual inspection for compliance (or compliance following repairs or refurbishment) by a team of two persons in no more than 8 h.

All welds shall be either directly inspectable visually or inspectable by using video.

Provisions shall be made in the design for access to 100% of the containment volume for purposes of inspection and maintenance. A means shall be provided for pressure testing the containment system.

The packaging closure seal shall be easily replaceable.

Any dunnage, if required, will be easily replaceable.

High-wear components shall be identified as sacrificial components and shall be readily replaceable. Objective replacement criteria shall be developed.

Consideration shall be given to decontamination by avoiding rough welds, crevices, or other features to promote easy radiological surveying, decontamination, or general cleaning.

External surfaces not constructed of stainless steel shall be coated with epoxy paint or other impervious sealant.

Leak-test vacuum ports shall accept standard fittings and commercial adapters that will mate with universally available vacuum equipment.

3.7 MANUFACTURING REQUIREMENTS

The packaging shall be manufactured in accordance with NUREG/CR-3854, *Fabrication Criteria For Shipping Containers*,[23] and NUREG/CR-3019, *Recommended Welding Criteria For Use In The Fabrication of Shipping Containers for Radioactive Materials*,[24] as applicable.

National standards shall be used in the purchase of materials, where possible. All materials shall be certified, and the traceability of all certifications shall be maintained.

Fabrication shall be in accordance with a controlled manufacturing plan that is based on the requirements of 10 CFR 71, Subpart H. Controlled variables, as a minimum, shall include procurement, material control, fabrication methods, processes, assembly procedures, and testing to the extent required to assure a consistent product that adequately represents the Qualification Test article.

Quality assurance (QA) provisions shall be in accordance with Sect. 3.8 of this document.

3.8 QUALITY ASSURANCE REQUIREMENTS

The design, fabrication, testing, and certification of the new packaging to be developed for MOX fresh fuel transport shall be conducted in accordance with a QA program that meets the requirements of 10 CFR 71, Subpart H "Quality Assurance" and any other QA requirements that may be imposed by the DOE FMDP. The QA program shall be submitted to and approved by NRC prior to performance of any activities affecting the quality of the packaging. The QA program shall address all of the criteria in Subpart H, and each criterion will be applied in a graded manner consistent with its importance to the safety of the packaging and to ensure compliance with regulations. The QA program documentation will reflect the results of the grading process.

The MOX packaging QA program shall be documented in a QA plan. Procedures or instructions will be incorporated into the QA program as appropriate for each applicable Subpart H criterion to provide the detail necessary to implement the QA plan. Existing procedures or instructions shall be approved and used where possible, and additional procedures or instructions will be developed as necessary to address any gaps. The design organization shall comply with the requirements of the QA program and shall provide control over activities, materials, and components affecting the quality of the work, which will be consistent with their importance to the safety of the MOX packaging. The QA program documentation shall clearly delineate the authority and duties of persons and organizations performing activities affecting the safety-related functions of packaging development.

The design organization shall be responsible for the establishment and execution of the QA program to include assurance that all supporting organizations engaged in the development of the MOX packaging comply with those parts of the QA program determined to be applicable to their activities. The QA program shall apply to the design organization and all supporting organizations including (but not limited to) contractors, subcontractors, vendors, agents, and consultants. Existing QA programs of supporting organizations may be approved for use when appropriate and when such programs meet the applicable requirements of Subpart H.

The QA program shall include the means, methods, and resources for verifying implementation of QA plans, procedures, and instructions. Persons charged with performing QA functions shall have sufficient authority and organizational freedom to identify quality problems; initiate, recommend, or provide solutions to problems; and verify implementation of solutions. Such persons (in their QA roles) shall report to a level of management of sufficient independence to allow safety to take precedence over cost and schedule.

The applicable parts of the QA program shall be phased in as development of the MOX packaging moves from establishment of a requirements baseline, into design, fabrication of prototypes, testing and acceptance, and through certification of the new packaging. The QA program shall be regularly assessed for adequacy and will be updated as necessary to ensure that the controls established are sufficient to

ensure NRC and DOE that the packaging design meets the applicable criteria of 10 CFR 71 and to provide confidence that the packaging will be acceptable for its intended use.

REFERENCES

1. Record of Decision for the Storage and Disposition of Weapons-Usable Fissile Materials Final Programmatic Environmental Impact Statement, U.S. Department of Energy, January 14, 1997.
2. *Storage and Disposition of Weapons-Usable Fissile Materials Final Programmatic Environmental Impact Statement*, Vol. 1, DOE/EIS-0229, U. S. Department of Energy, December 1996.
3. *Commerce Business Daily*, March 24, 1997.
4. *Program Acquisition Strategy for Obtaining Mixed Oxide Fuel Fabrication and Reactor Irradiation Services*, July 17, 1997.
5. 49 CFR 171–178, "Shippers–General Requirements for Shipping and Packaging."
6. 10 CFR 71, "Packaging and Transportation of Radioactive Materials."
7. DOE Order 5633.3B "Control and Accountability of Nuclear Materials," September 7, 1994.
8. DOE Order 460.1A, "Packaging and Transportable Safety," October 2, 1996.
9. DOE Order 460.2, "Departmental Materials Transportation and Packaging Management," September 27, 1995.
10. DOE Order 5632.1C, "Protection and Control of Safeguards and Security Interests," July 15, 1994.
11. DOE/RW-0184-R12, Vol. 1 (July 1992).
12. "Site and Facility Waste Transportation Planning Documents Status and Findings," pp. 52–57 in *Proceedings of the High-Level Waste Management Conference, Las Vegas, Nevada, April 26–30, 1993*.
13. S. B. Ludwig, et al., *Transportation and Packaging Issues Involving the Disposition of Surplus Plutonium as MOX Fuel in Commercial LWRs*, ORNL/TM-13427, Lockheed Martin Energy Research Corp., Oak Ridge National Laboratory, August 1997.
14. ANSI N14.2, "Tiedowns for Transport of Fissile and Radioactive Material Containers Greater than One-Ton, Truck Transport."
15. ANSI N14.6, "Special Lifting Devices for Shipping Containers Weighing 10,000 Pounds (4,500 kg) or More."
16. Personal communication from L. Luna, Sandia National Laboratories, December 1996.
17. *Nuclear Regulatory Commission Regulatory Guide 7.8*, "Load Combinations for the Structural Analysis of Shipping Casks for Radioactive Materials," Rev. 1, September 1988.
18. *Nuclear Regulatory Commission Regulatory Guide 7.6*, "Design Criteria for the Structural Analysis of Shipping Cask Containment Vessels," Rev. 1, March 1978.
19. *ASME Boiler and Pressure Vessel Code*, Sect. III, Subsect. NB, American Society of Mechanical Engineers, New York, 1977.
20. ANSI N14.5, "American National Standard for Radioactive Materials–Leakage Tests on Packages for Shipment."
21. *Recommendations for Preparing the Criticality Safety Evaluation of Transportation Packages*, NUREG/CR-5661.
22. *Criticality Benchmark Guide for Light-Water-Reactor Fuel in Transportation and Storage Packages*, NUREG/CR-6361.
23. *Fabrication Criteria for Shipping Containers*, NUREG/CR-3854.
24. *Recommended Welding Criteria for Use in the Fabrication of Shipping Containers for Radioactive Materials*, NUREG/CR-3019.

Page Intentionally Blank

Appendix A

MOX FUEL ASSEMBLY DESCRIPTION

Page Intentionally Blank

Appendix A

MOX FUEL ASSEMBLY DESCRIPTION

A.1 INTRODUCTION

The following information has been collected to establish the design envelope for a conceptual design of the mixed-oxide (MOX) fresh fuel transport package.

As described in Sect. 1.1 of this report, the Department of Energy (DOE) intends to contract with a consortium of private-sector entities who will be responsible for the design and fabrication of the MOX fuel assemblies.

The MOX fuel assemblies will be built to be used in currently operating commercial light-water reactors (LWRs). Either boiling-water reactor (BWR) or pressurized-water reactor (PWR) fuel assemblies could be used. A different configuration of the basic packaging design will be needed for each type of fuel. To determine the approximate size and weight requirements for a transport package, existing inventories of LWR fuel assemblies were investigated.

Figure A.1 shows a generic BWR fuel assembly but is not intended to show the exact design to be used for the BWR MOX fuel assembly.

A.2 BWR ASSEMBLY

The information in Table A.1 was extracted from *Spent Nuclear Fuel Discharges from U.S. Reactors 1994*.[1] This table shows BWR assembly sizes that are most prevalent in the industry.

Table A.2 shows specific BWR fuel assembly types used in U.S. nuclear power plants that could be candidates for the MOX fuel program. This size and weight information forms the basis for the preliminary design envelope and the preliminary design estimates for a MOX fuel transport package containing BWR fuel assemblies.

Table A.3 provides a preliminary design envelope for a BWR MOX fuel package to accommodate the greatest fraction of fuel assembly sizes used in the industry.

A.3 PWR ASSEMBLY

Figure A.2 shows a generic PWR fuel assembly but is not intended to show the exact design to be used for the MOX fuel assembly.

The information in Table A.4 was extracted from Ref. 1. This table shows PWR assembly sizes that are most prevalent in the industry.

Table A.5 shows specific PWR fuel assembly types used in U.S. nuclear power plants that could be candidates for the MOX fuel program. This size and weight information forms the basis for the preliminary design envelope and the preliminary design estimates for a MOX fuel transport package containing PWR fuel assemblies.

Table A.6 provides a preliminary design envelope for a PWR MOX fuel package to accommodate the greatest fraction of fuel assembly sizes used in the industry. The 199-in.-long South Texas fuel size was dropped from consideration because it was much longer and heavier than the rest.

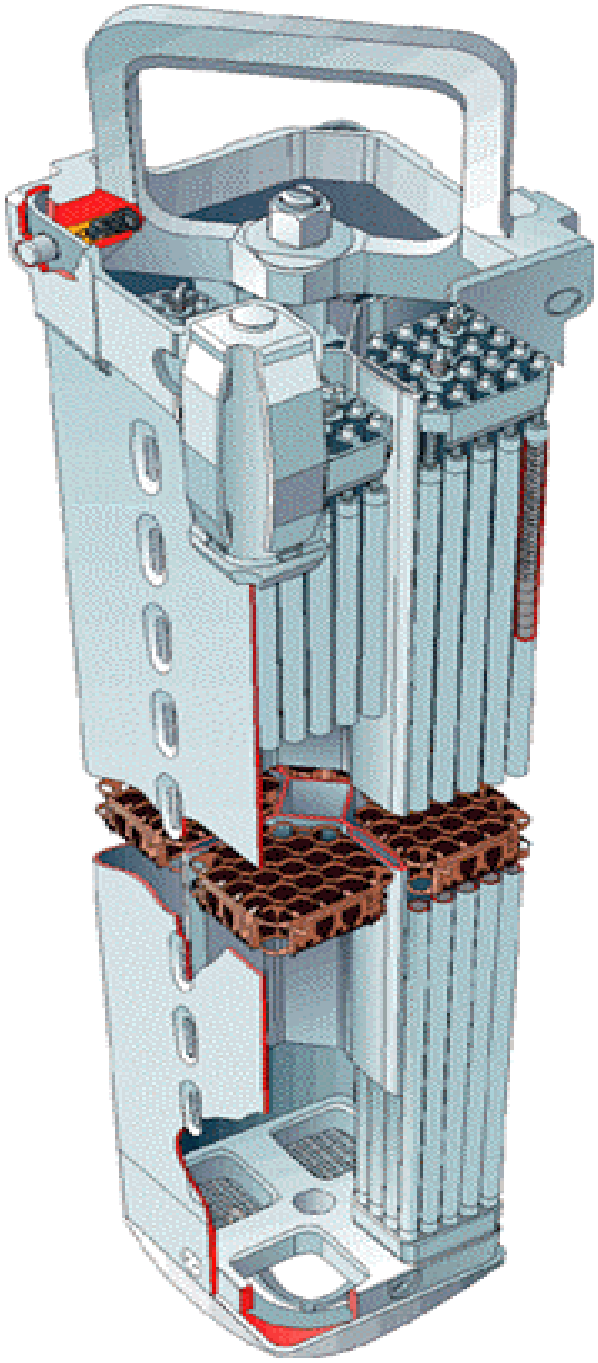

Fig. A.1. Typical BWR fuel assembly.

Table A.1. Distribution of discharged fuel assembly by nominal transverse dimensions (BWR)

Assembly length (in.)	Assembly width (in.)	Number of assemblies	Assembly (%)
84.0	6.52	421	0.70
95.0	4.67	390	0.65
102.5	5.62	333	0.55
134.4	4.28	892	1.48
171.2	5.44	18625	30.97
172.0	5.44	188	0.31
176.2	5.44	39295	65.33
Total		60144	100.00

Source: Energy Information Administration, *Spent Nuclear Fuel Discharges from U.S. Reactors 1994*, SR/CNEAF/90-01.

Table A.2. Selected fuel assembly detailed dimensional data

	Dimensions		
	Length [m (in.)]	Width [cm (in.)]	Weight [kg (lb)]
GE-3	4.350 (171.25)	14.02 (5.518)	~ 256.0 (615.0)
GE-5	4.470 (176.00)	14.02 (5.518)	~ 268.0 (600.0)
GE-7	4.467 (175.87)	13.81 (5.438)	~ 268.0 (590.0)
ANF 8 × 8 JP-3	4.351 (171.29)	13.34 (5.251)	254.9 (562.3)
ANF 8 × 8 JP-4,5	4.472 (176.05)	13.34 (5.251)	266.5 (587.8)

Source: Characteristics of Spent Fuel, High Level Waste, And Other Radioactive Wastes Which May Require Long Term Storage, DOE/RW-0184, Appendix 2A, December 1987.

Table A.3. Preliminary MOX fuel transport package design envelope (BWR fuel)

Assemblies per package	Up to 8 assemblies
Assembly length	4.348 m (171.2 in.) to 4.475 m (176.2 in.)
Assembly width	13.2 cm (5.2 in.) to 14.1 cm (5.52 in.)
Assembly weight	Up to 302.6 kg (667.5 lb) each assembly
Total payload (8 assemblies)	Up to 2420 kg (5340 lb)

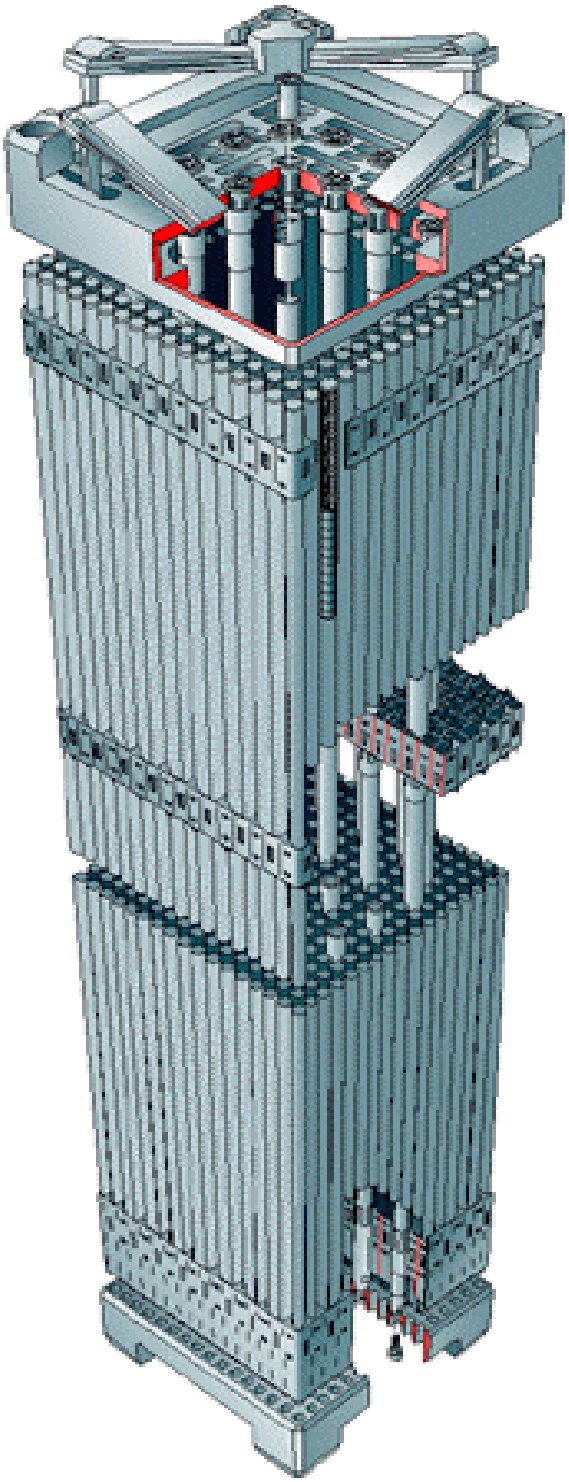

Fig. A.2. Typical PWR fuel assembly.

Table A.4. Distribution of discharged fuel assembly nominal transverse dimensions (PWR)

Assembly length (in.)	Assembly width (in.)	Number of assemblies	Assembly (%)
111.8	7.62	533	1.20
137.1	7.76	665	1.49
137.1	8.42	892	2.00
138.8	6.27	160	0.36
146.0	8.10	570	1.28
147.5	8.20	793	1.78
157.0	8.10	4565	10.26
158.2	8.10	544	1.22
159.8	7.76	4093	9.20
159.8	8.44	22364	50.24
165.7	8.54	5439	12.22
176.8	8.10	2340	5.26
178.3	8.10	1132	2.54
199.0	8.43	421	0.95
Total		44511	100.00

Source: Spent Nuclear Fuel Discharges from U.S. Reactors 1994, Energy Information Administration, SR/CNEAF/96-01.

Table A.5. Selected fuel assembly detailed dimensional data

	Dimensions		
	Length m (in.)	Width cm (in.)	Weight [kg (lb)]
WE-Standard	4.247 (167.22) with control rod assembly	21.42 (8.434)	671.8 (1482.0)
WE-OFA	4.247 (167.22) with control rod assembly	21.42 (8.434)	622.4 (1373.0)
WE-Vantage5	4.067 (160.10)	21.40 (8.426)	618.8 (1365.0)
B&W-Mark C	4.209 (165.72)	21.68 (8.536)	682.2 (1505.0)
ANF-17x17 WE	4.099 (161.37)	21.40 (8.426)	611.1 (1348.0)

Source: Characteristics Of Spent Fuel, High Level Waste, And Other Radioactive Wastes Which May Require Long Term Storage, DOE/RW-0184, Appendix 2A, December 1987.

Table A.6. Preliminary MOX fuel transport package design envelope (PWR fuel)

Assemblies per package	Up to 4 assemblies
Assembly length	4.050 m (159.8 in.) to 4.530 m (178.3 in.)
Assembly width	21.0 cm (8.10 in.) to 22.25 cm (8.54 in.)
Assembly weight	Up to 700 kg (1545.0 lb) each assembly
Total payload (4 assemblies)	Up to 2800 kg (6180 lb)

REFERENCE

1. Energy Information Administration, *Spent Nuclear Fuel Discharges from U.S. Reactors*, SR/CNEAF/90-01.

Appendix B

SST/SGT DESCRIPTIONS

Page Intentionally Blank

Appendix B

SST/SGT DESCRIPTIONS

B.1 TRANSPORTATION SAFEGUARDS SYSTEM

Since 1947, the Department of Energy (DOE) and its predecessor agencies have moved nuclear weapons, nuclear weapons components, and special nuclear materials (SNM) by a variety of commercial and government transportation modes. In the late 1960s, world terrorism and acts of violence prompted a review of procedures for safeguarding these materials. As a result, a comprehensive new series of regulations and equipment was developed to enhance the safety and security of the materials in transit. The Transportation Safeguards Division (TSD) subsequently was established in 1975 at the DOE, Albuquerque, Operations Office (DOE/AL). TSD modified and redesigned transport equipment to incorporate features that more effectively enhance self-protection and deny unauthorized access to the materials. During that time TSD curtailed the use of commercial transportation systems and moved to a total federal operation.[1]

The culmination of efforts by TSD was the development of a system of procedures and equipment to ensure safe and secure transport of SNM. The system includes use of a nationwide communications system, armed couriers, specially designed vehicles, and procedures to ensure that transportation operations minimize transportation risks while achieving the highest levels of security to safeguard the materials while in transit.

B.2 SST/SGT DESCRIPTION

The safe secure trailer (SST) and its successor, the safeguards transport (SGT), are a specially designed part of an 18-wheel rig that incorporates various deterrents to prevent unauthorized removal of the cargo. These trailers have also been designed to afford the cargo protection against damage in the event of an accident. This is accomplished through superior structural characteristics and a highly reliable cargo tie-down system similar to that used aboard aircraft. The thermal characteristics of SST and/or SGT would allow the trailer to be totally engulfed in a fire for a long period of time without incurring damage to the cargo.

The tractors are standard production units that have been modified to provide the couriers protection against attack. Other vehicles that make up an SST convoy may include Ford vans and/or Chevrolet Suburbans. The tractors and escort vehicles are equipped with communications, electronic and radiological monitoring, and other equipment, which further enhance en route safety and security.

The vehicles utilized by TSD must meet maintenance standards significantly more stringent than those for similar commercial transport equipment. All vehicles undergo an extensive maintenance check prior to every trip, as well as periodic preventive maintenance inspections. In addition, these vehicles are replaced more frequently than those of commercial shippers. As a result, TSD experiences few en route breakdowns and has had no accidents attributed to equipment malfunction.

B.3 SST/SGT CARGO CAPACITY

Because of safeguards requirements, SST and/or the newer SGT (when available) will be used for the transport of fresh (unirradiated) mixed-oxide (MOX) fuel assemblies in certified Type B packages. Four basic versions of SSTs have been built over the years. The first was SST-1, which has the lowest cargo capacity (~10,000 lb). It is assumed that all SST-1 trailers will be retired (and/or replaced by SGTs) before the beginning of the transportation mission involving the proposed MOX fresh fuel package.

Figure B.1 and Table B.1 describe the interior dimensions (usable space) and other key parameters that affect the payload capacity of SSTs and SGTs. Figure B.2 provides allowable payload capacity as a function of the package center of gravity (c.g.) as located in the SST or SGT. Because of uncertainty of whether DOE/TSD will provide an SST-2 or an SGT for a particular shipment, the lower SGT payload limit of 13,600 lb is to be used for the package design envelope.

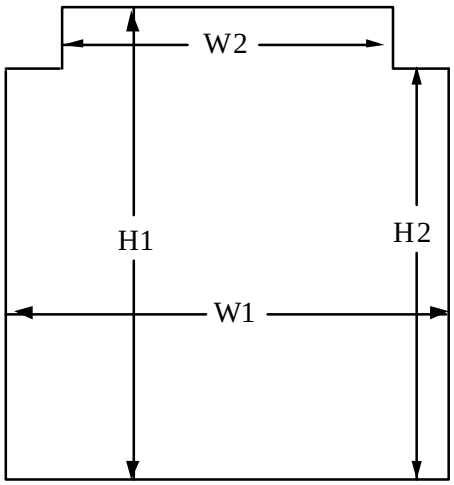

Fig. B.1. Internal SST dimensions.

Table B.1. SST and SGT—interior dimensions and payload capacity

	SST-2	SGT
Interior dimensions		
Width (W1), in.	70.5	85
Width (W2), in.	57	
Height (H1), in.	80	83.5
Height (H2), ft	59	
Depth, ft	33	37
Tie-down system		
Number of floor tracks	5	5
Track spacing, in.	14.625	17.25
Tie points spacing, in.	1	1
Payload capacity (at c.g.), relative to front of trailer	16,500 lb at 295 in.	13,600 lb at 290 in.

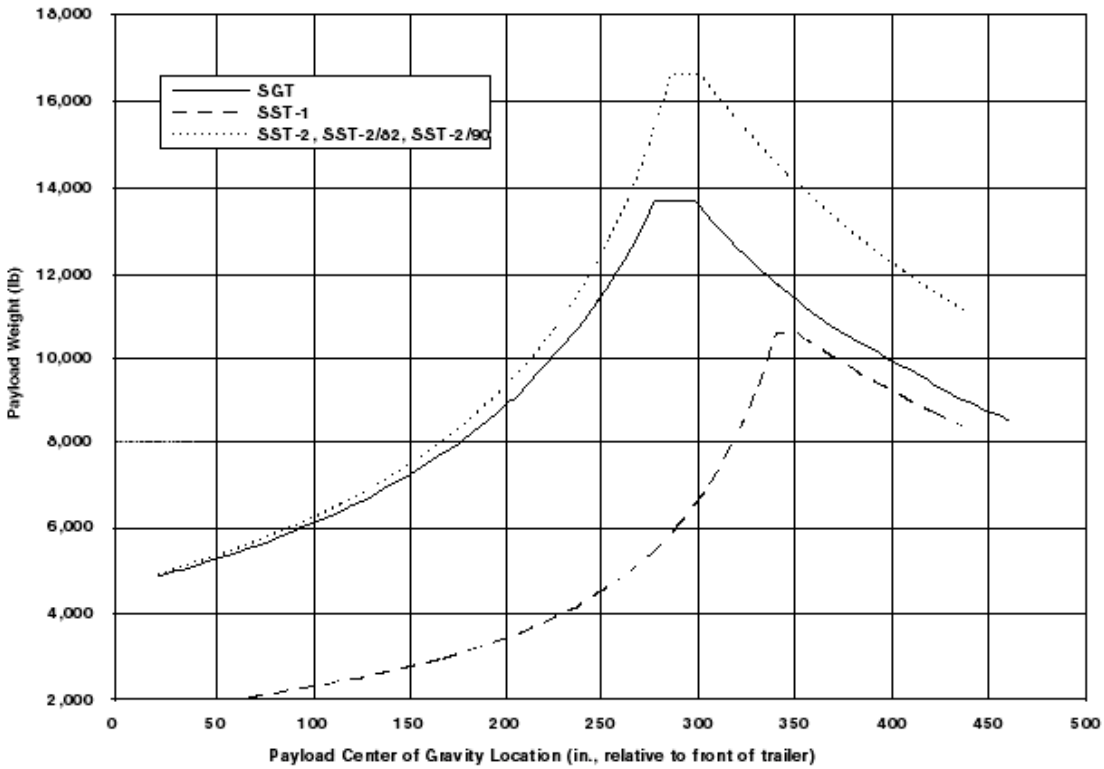

Fig. B.2. SST and SGT—allowable payload vs c.g.

REFERENCE

1. DOE NEWS, Fact Sheet, "Transporting and Safeguarding Special Nuclear Materials," June 1993.

Page Intentionally Blank

Appendix C

MOX FUEL-HANDLING OPERATIONS

Page Intentionally Blank

Appendix C

MOX FUEL-HANDLING OPERATIONS

C.1 INTRODUCTION

The following discussion presents information regarding the Department of Energy's (DOE's) concept of operations for use of its mixed-oxide (MOX) transportation system to pick up, transport, and deliver unirradiated MOX nuclear reactor fuel to commercial nuclear power plants. This concept of operations characterizes interfaces between DOE's MOX fuel transportation system, the MOX fuel fabrication plant, and the mission nuclear power plant(s). It includes (1) DOE's safe secure trailer (SST) vehicles, (2) associated transportation physical security operations, (3) the MOX transportation package, and (4) the consortium's nuclear fuel-handling operations and associated storage facilities. Finally, the descriptions and information provided are based on present-day law and policies of the U.S. Government, including DOE policies and orders, and federal, state, and local regulations.

DOE's concept of operations for MOX transportation addresses the following:

- pickup operations at a MOX nuclear fuel fabrication plant,
- in-transit operations in SSTs of unirradiated MOX nuclear fuel,
- delivery of MOX fuel at nuclear power plants,
- MOX package handling and unloading,
- return of MOX packages to a MOX fabrication facility, and
- return of defective MOX fuel assemblies to a MOX fabrication facility.

C.2 PICKUP OPERATIONS AT A MOX PLANT

The DOE SST operations team will direct and approve loading and securement of packages within SST vehicles and will be solely responsible for closing and securing SST vehicle cargo areas prior to transport. DOE will take custody of packaged MOX nuclear reactor fuel loaded on SST vehicles for transport at a MOX fuel fabrication plant. DOE will require that the MOX plant operator fully comply with the Nuclear Regulatory Commission (NRC) certificate of compliance for the package and applicable NRC and U.S. Department of Transportation (DOT) regulations in preparing and offering packaged MOX fuel for transportation, including proper shipping papers and nuclear material transfer forms. DOE anticipates that, if applicable, approved International Atomic Energy Agency (IAEA) safeguard seals will be placed on packages in accordance with established protocols and procedures by the MOX plant operator, DOE, and other cognizant authorities prior to release of loaded packages for transport. IAEA safeguard seals may also be applied to transport vehicles. The consortium's MOX plant operator will not be responsible for IAEA safeguards provisions that affect SST vehicles, equipment, or operations. Figure C.1 provides an example of one of DOE's SST tractors. Table C.1 provides general information about the SST dimensions.

Task interactions between SST operations teams, the SST operations center, and the consortium's MOX plant operations and security personnel involved in loading, securing, and dispatching SST shipments will be conducted in accordance with the requirements of DOE Orders 5610.14,[1] 5632.2A,[2] and 5633.3B,[3] and SST operations procedures. The consortium's MOX plant operator will provide necessary labor, loading areas and docks, and package-handling equipment for loading MOX transportation packages into SSTs. In addition, MOX plant personnel will perform all necessary preshipment health physics surveys prior to release of SST shipments for dispatch. The MOX plant personnel involved in fuel-handling operations will be required to have a "need to know" and possess either appropriate NRC [per 73.50(c)(1)][4] or DOE Level 3 (per DOE M 5632.1C-1, II, 2)[5] access authorizations. In dispatching shipments of MOX fuel to the commercial nuclear power plant, the DOE's SST operations team and operations center will also coordinate with the security operations center at the DOE site where the MOX facility is located. Estimated time of arrival, shipment, and material accountability information will be transmitted to

Fig. C.1. DOE SST vehicle.

Table C.1. General dimensions for a DOE SST

Gross vehicle weight (GVW) rating, lb	80,000
Maximum payload, lb	13,600
Tractor trailer overall length, ft	60
Tractor trailer overall width, in.	102
Tractor trailer overall height, ft	13
Trailer rear door width, in.	70.5 to 85
Trailer rear door height, in.	90
Trailer floor height above roadway, empty, in.	56.5
Trailer floor height above roadway, fully loaded, in.	56.5
Tractor trailer minimum turning radius, ft	37.5

designated persons at the commercial nuclear power plant in accordance with prearranged protocols. DOE anticipates the time necessary to prepare, load, secure, and dispatch SSTs to be on the order of less than 1 d (per convoy).

C.3 IN-TRANSIT OPERATIONS

Upon taking custody and following release by the SST dispatcher, a DOE SST operations team will provide safe, secure, and through transport for MOX nuclear fuel from the MOX fuel fabrication plant to a specified commercial nuclear power plant. Transportation activities will comply with applicable DOE Orders governing transport of strategic special nuclear materials (SSNM), the terms of the operating agreement between DOE and the consortium, and associated policies and procedures. In addition, off-site packaging and transportation of MOX nuclear fuel will comply with DOT regulations governing safe transportation of Type B quantities of fissile radioactive materials with these exceptions.

- For in-transit security reasons, the SST operations will not be subject to roadside safety inspections conducted by federal, state, or tribal authorities, but will be subject to strict DOE operations safety requirements that meet or exceed Federal Motor Carrier Regulations.
- SSTs being monitored through the use of satellite tracking, or its equivalent, and accompanied by security escorts during transportation will not display radioactive material placards.
- To comply with DOE Order requirements governing in-transit physical security for formula quantities of special nuclear materials (SNM), preshipment notifications to state and tribal governments will not be made.
- Routes used for transportation of MOX fuel will be selected with emphasis on requirements for in-transit safety and physical security; therefore, they may not, in all circumstances, comply with DOT requirements for shipments of highway route-controlled quantities of radioactive materials.

Off-site transportation of each SST carrying fresh MOX fuel will be coordinated by the DOE Transportation Safeguards Division using well-established systems and procedures. On-site transportation activities at the DOE site will comply with applicable DOE Orders (e.g., DOE Order 460.1A, "Packaging and Transportation Safety").[6]

C.4 DELIVERY OPERATIONS AT A NUCLEAR REACTOR PLANT

The SST shipments of unirradiated MOX fuel assemblies arriving at a nuclear power plant for delivery will be received in accordance with procedures and protocols established in an operating agreement between the DOE's SST operations and the consortium's nuclear power plant operator. Because of the security inherent in the SST operations, DOE anticipates that usual plant procedures, requiring vehicles coming onto a plant site to be inspected for explosives and contraband by plant security forces, will not apply to SST deliveries of MOX fuel. DOE anticipates that SSTs will arrive and be met, verified, and escorted by the plant's security force through security barriers to a designated MOX receiving area at the reactor plant [expected to be the plant's auxiliary building for pressurized-water reactor (PWR) plants and the reactor building for boiling-water reactor (BWR) plants]. As with deliveries of unirradiated low-enriched uranium (LEU) reactor fuel by commercial carriers, upon arrival at the receiving area, delivery vehicles (SSTs in this case) will be backed into the facility. However, unlike commercial vehicles, tractor and trailer units should not be separated and must be operated only by DOE drivers. Thus, plant receiving areas should be capable of accommodating and have sufficient clearance for unloading a full-length SST vehicle. DOE anticipates that the SST will be unloaded in an enclosed facility that meets the physical protection requirements for an NRC Category I facility. Specific details for meeting required facility security measures when unloading the SST will need to be developed on a case-by-case basis.

On the basis of data presented in Table C.2 and Table C.3, which have been compiled by Oak Ridge National Laboratory (ORNL), and typical facility layouts for BWRs (as illustrated in Figs. C.2 and C.3) and PWRs (as illustrated in Figs. C.4 and C.5), most commercial nuclear power plants would be able to receive and unload SSTs. Modifications to receiving area buildings may be required, depending on interpretations of physical security requirements, such as erection of temporary barriers and allowances for a suitable guard force in lieu of an enclosed space to contain the entire SST during loading and unloading operations. Alternatively, the nuclear power plant owner may elect to provide a separate, secure on-site storage facility for unloading and lag storage of MOX fuel assemblies.

Table C.2. Dimensions of representative BWR plant receiving areas[a]

Receiving area overall length	76 ft–6 in. to 126 ft (including outer airlock)
Receiving area width (normally the width of the outer door)	14 ft–6 in. to 21 ft–6 in. (minimum)
Receiving area ceiling height	21 ft to 49 ft–6 in. (minimum)
Hatchway opening (through which the package must pass)	14 ft–7 in. to 31 ft–8 in. (minimum)
Elevation above receiving area floor to refueling area	18 ft to 165 ft–11 in.

[a]These data were taken from a representative sampling of BWR reactor buildings.

Table C.3. Dimensions of representative PWR plant receiving areas[a]

Receiving area overall length	71 ft to 187 ft–6 in.
Receiving area width (normally the width of the outer door)	15 ft–9 in. to 22 ft (minimum)
Receiving area ceiling height	18 ft to 26 ft (minimum)
Hatchway opening (through which the package must pass)	11 ft–1 in. to 15 ft–8 in. (minimum)
Elevation above receiving area floor to refueling area	0 ft to 28 ft

[a]These data were taken from a representative sampling of PWR auxiliary buildings.

When shipments involve convoys of two or more SST vehicles, (typically three SSTs operate in a convoy) reactor plant operators may be requested to provide secure areas for parking of loaded SST vehicles.

During vehicle positioning operations, DOE anticipates that the reactor plant's security force will provide physical security for receiving operations in accordance with the applicable requirements of 10 CFR 73,[7] the plant's NRC license, applicable technical specifications, and plant-specific policies and procedures. Protocols established by the operating agreement between DOE's SST operations and the reactor plant's operator will spell out safeguards and security procedures and respective responsibilities for the SST operators and escorts, plant operations personnel, and plant security force personnel.

After an SST is positioned in a plant's receiving bay area, security seals on its cargo area will be removed, the cargo area will be opened, and any coverings and attachments that secure the MOX packages in the SST cargo area will be removed. Before removing the MOX package from SST, DOE anticipates that a receiving radiation/contamination survey will be conducted. DOE will require that the SST operators, who will hold DOE Level 3 clearances and the requisite need to know, observe these and other receiving activities and maintain surveillance of the SST and MOX package payload until the package is removed from the SST, material accountability documentation has been transferred and verified, and plant operations formally takes possession of the shipment. At this time, DOE will require that the SST operators obtain necessary release documents and direct closure and sealing of the SST cargo area. The SST operators will continue to maintain visual surveillance and physical control of SST at all times. Figures C.6 and C.7 illustrate examples of two different preliminary concepts of "end-loading" and "lateral-loading" MOX packages being removed from an SST and fuel being unloaded, respectively. As illustrated in Fig. C.6, the end-loading concept would probably be situated with its long axis vertical for loading and unloading of individual fuel assemblies. In contrast, the double-strongback concept, as shown in Fig. C.7, would be situated on the fueling floor, and the strongbacks would be elevated to vertical to allow the MOX fuel to be removed laterally and placed into storage. DOE expects the consortium to provide all necessary labor, equipment, procedures, and other support services necessary to remove MOX packages from SSTs at the consortium's reactor plants.

Following delivery of a loaded MOX fuel package to a reactor plant, SSTs will be dispatched by SST operations. Once dispatched, DOE anticipates that the reactor plant security operation will clear SST vehicles and operating crews through security barriers without delay. DOE may request the reactor

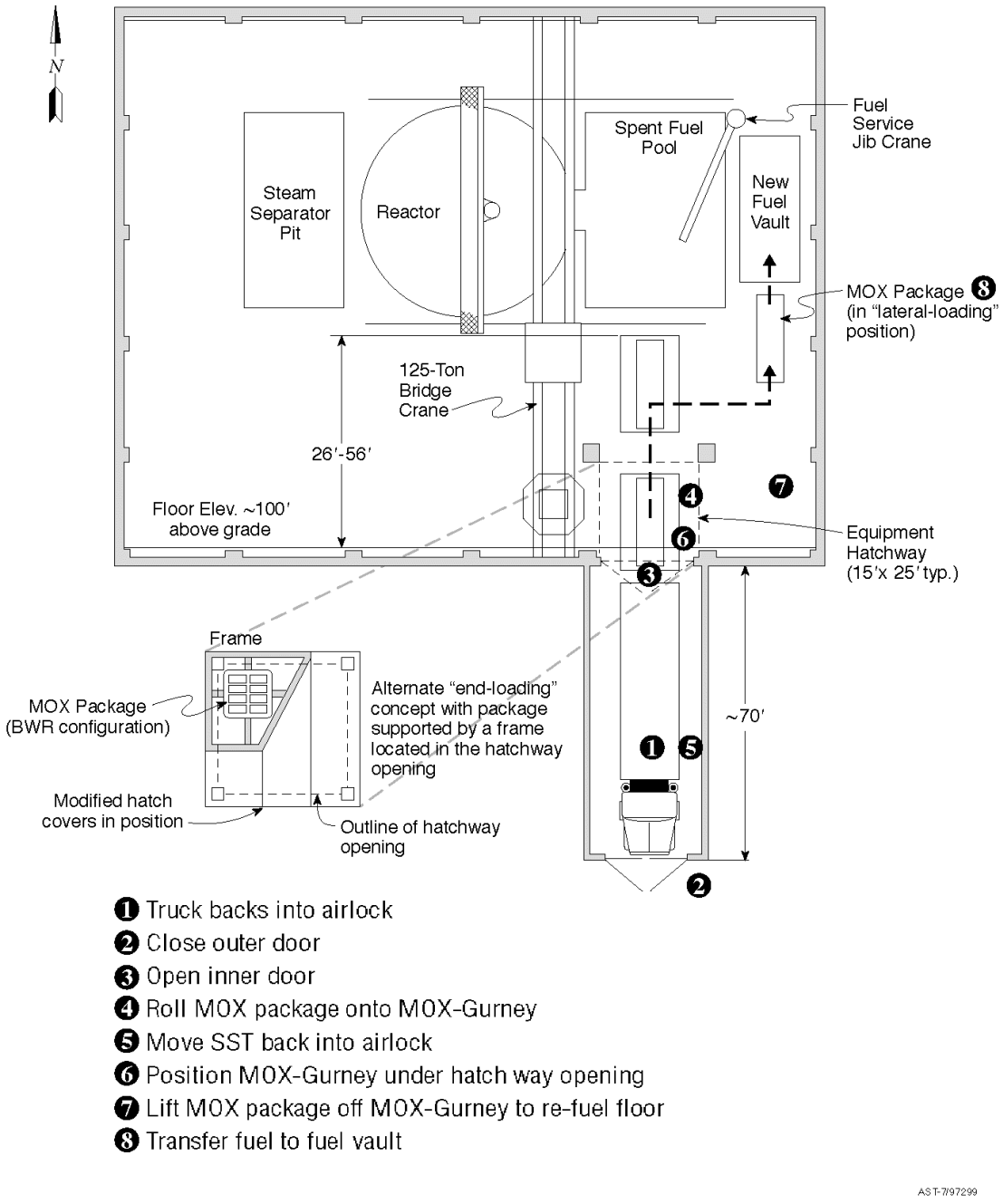

Fig. C.2. General arrangement sketch of reference BWR reactor building plan view (not to scale).

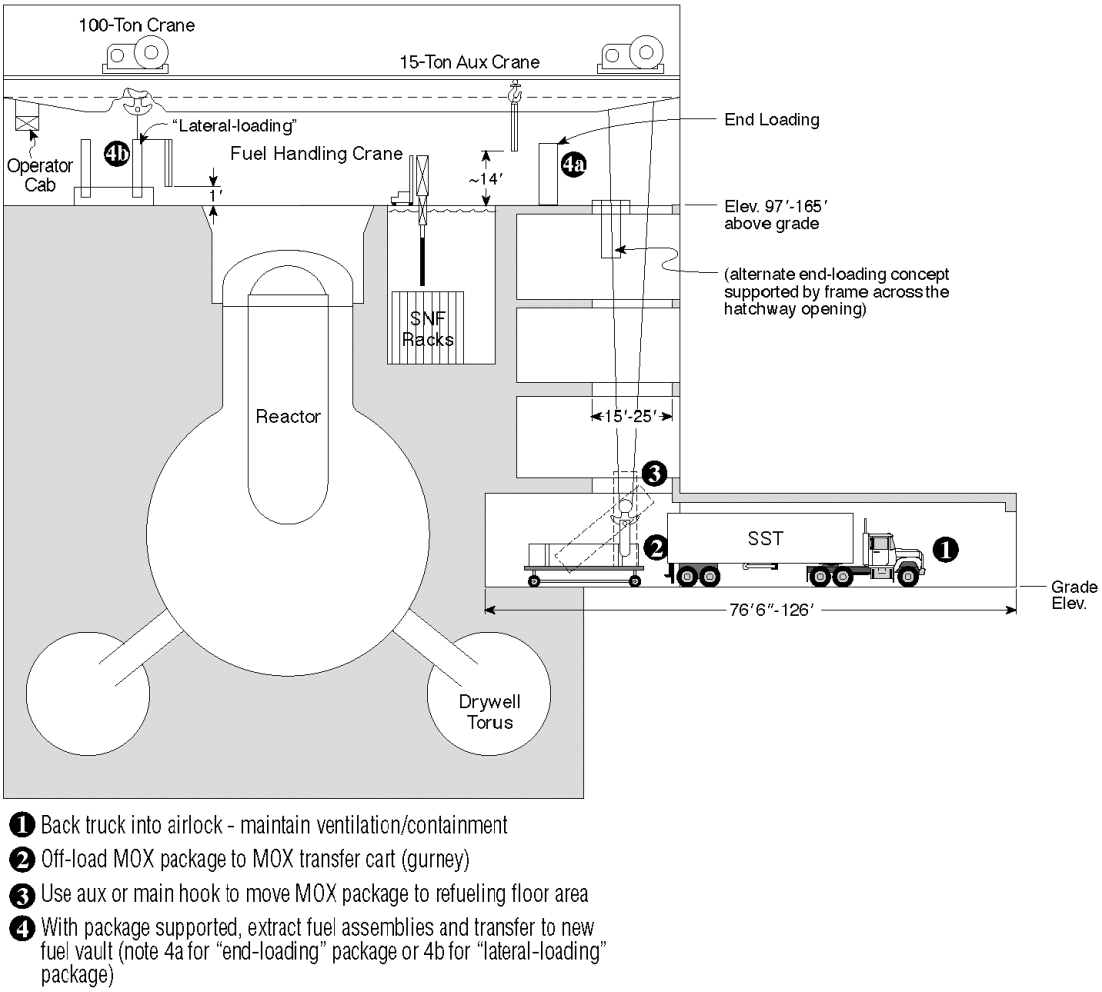

Fig. C.3. Reference BWR fuel building elevation view (not to scale).

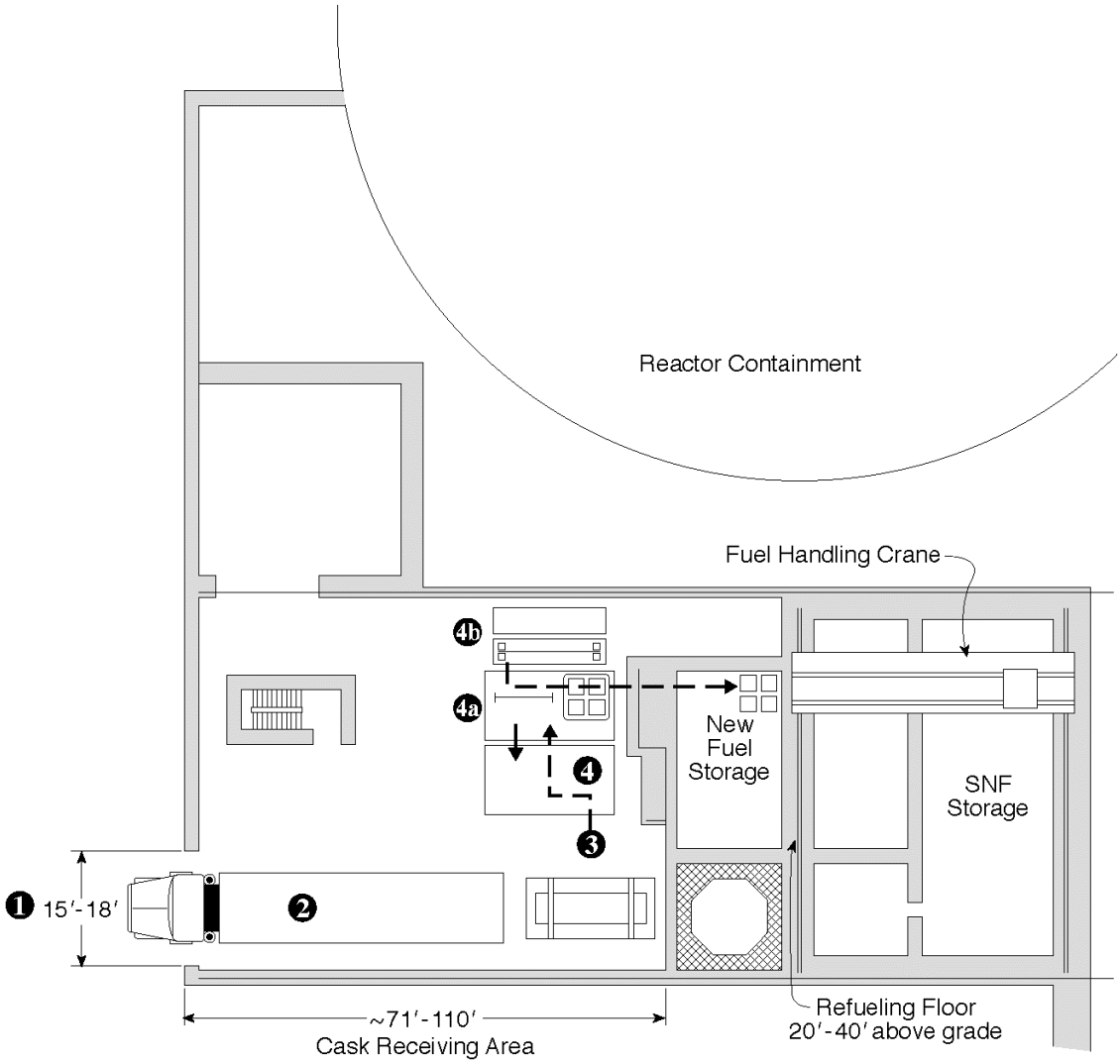

1. Additional barrier required?
2. SST unloading (normally expected that enough length exists to remove MOX package from truck with aux building access door closed)
3. Once on MOX package transfer cart (gurney) move to an appropriate location to unpackage
4. Lift each assembly from the MOX package and transfer to storage (note unloading for 4a "end-loading" package and 4b "lateral-loading" package)

AST-7/97299

Fig. C.4. General arrangement sketch of reference PWR plant plan view (not to scale).

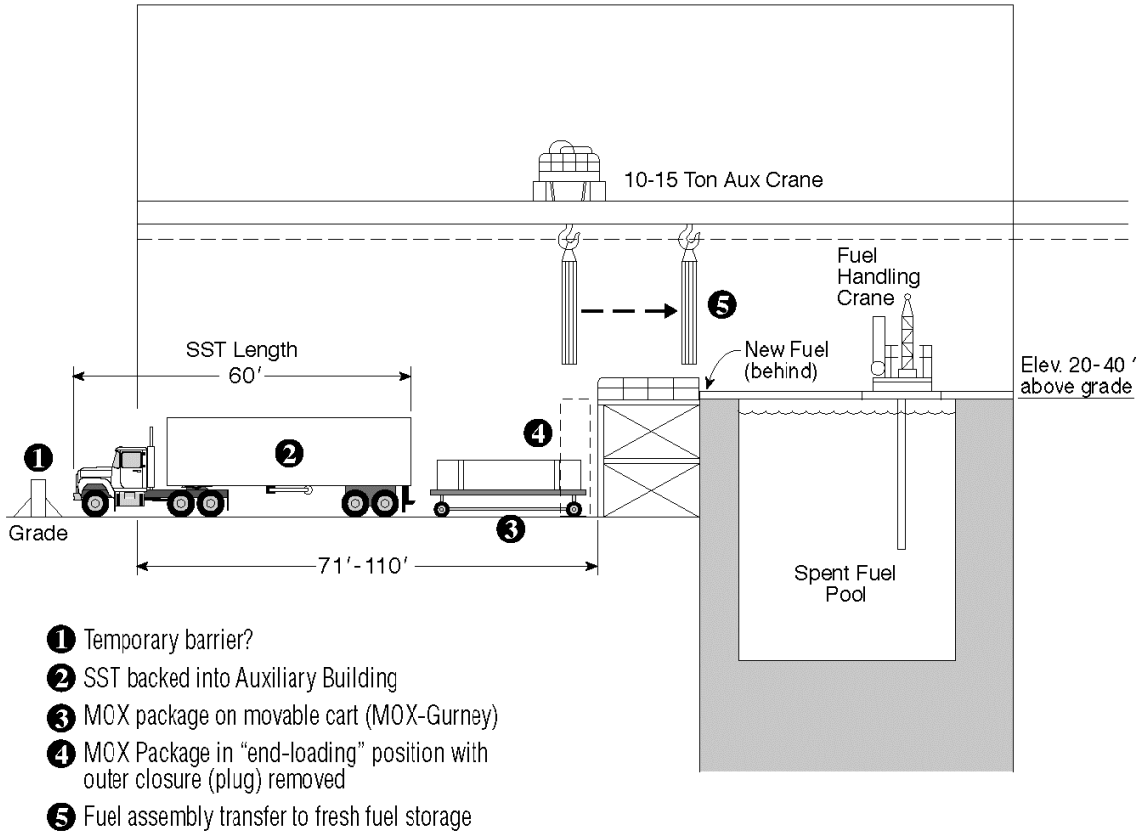

Fig. C.5. Reference PWR fuel building elevation view (not to scale).

plant operator to provide a temporary, on-site, secured area for parking SSTs that are awaiting dispatch orders. DOE estimates that the time required to receive, verify, unload, and dispatch an SST will be on the order of 1 d.

C.5 MOX PACKAGE HANDLING AND UNLOADING

DOE understands that receipt and handling operations at nuclear power plants for unirradiated MOX nuclear fuel assemblies will differ from plant to plant. Although there are differences in operating practices, layout differences between PWR and BWR plants are the most significant. In the PWR plants, unirradiated fuel and spent fuel are typically stored in auxiliary buildings that are separate from the reactor's primary containment structures. In the BWR plants, unirradiated fuel and spent fuel are typically stored in the "secondary containment" part of the reactor building. Also, for a typical PWR plant, the reactor vessel and associated systems are located at near grade-level; in a typical BWR, the reactor vessel is at a higher than grade-level elevation with both unirradiated and spent nuclear fuel storage located 90 ft or more above grade-level. These dissimilar layouts lead to important differences in how the DOE's MOX transportation package will be received, removed from SSTs, handled, and unloaded; they have been considered by ORNL in developing the MOX package conceptual design.

In addition to various plant layouts and operating practices, DOE expects that packaging, transportation, and receiving operations involving MOX fuel assemblies will have important differences from experience with receipt and handling of LEU fuel. One of the primary differences will be in the configuration and operation of the MOX transportation packaging. Unlike Type AF (fissile) packages for unirradiated LEU

fuel, the MOX package will be designed and approved as a Type B(U)F package because of the plutonium content in MOX fuel assemblies.

For unirradiated LEU fuel shipments, typically 6 or 7 of the 6000- to 8500-lb packages containing 12 or 14 PWR assemblies (2 assemblies in a package), or 12 of the 2000-lb packages containing 24 BWR assemblies (2 assemblies in a package) are routinely transported on a commercial tractor–trailer vehicle using open flatbed trailers. A typical Type AF package for PWR fuel assemblies is a 15-ft-long, 3-ft-diam metal cylinder that has clam-shell-like closures; a package for BWR fuel is a 15-ft-long, 2.5-ft-square, wood-encased box with one face of the box being removable to access the fuel assemblies.

In contrast to experience in transporting unirradiated LEU fuel, SSTs are sophisticated, security vehicles with fully enclosed semitrailers. Because of the weight of security countermeasures, for unrestricted interstate legal-weight operations, SST payloads are limited to about 13,500 lb. The DOE's MOX package is being designed to make maximum use of the SST payload capacity. On-the-road dimensions of an SST tractor–trailer are similar to those for other over-the-road tractor–trailer combinations: ~60 ft long, no more than 8 ft–6 in. wide, and no more than 13 ft–6 in. tall. The vehicle's GVW does not exceed 80,000 lb.

At present, ORNL has several preliminary concepts for MOX fresh fuel package design under consideration. Preliminary concepts for the MOX package are illustrated in Appendix F. All of the package concepts are ~17 to 19 ft long and about 4 ft in cross section or diameter. The target weight for these packages, when loaded, is 13,000 lb.

DOE anticipates that some plant modifications and additional special equipment may be needed for receiving and handling MOX fuel delivered by an SST in the MOX packages:

- A movable platform, as is illustrated in Figs. C.6 or C.7, or a fixed loading dock to receive MOX packages as they are removed by rolling or sliding them out the back of the cargo area of SSTs. (Note: This will require that the unloading bay areas of the plant have sufficient length to accommodate an SST plus the full length of DOE's MOX package when unloading operations are being conducted.)
- Rigging, fixtures, and frames for handling, transferring, and unloading MOX packages in the vertical (standing-up) orientation inside the plant if the Type B(U)F packages have end closures (see package descriptions below).
- Special equipment, procedures, and operating rules to protect MOX fuel assemblies from damage during MOX package handling and unloading.
- Assumption that plant owners will be expected to be responsible for plant modifications, changes to procedures, and construction of special equipment.

As noted previously, MOX fuel packages will be removed from SSTs by sliding or rolling them horizontally out the back of the SST's cargo box. Following this transfer to a loading dock or movable platform, the package can be lifted and positioned using the same plant overhead cranes used to lift and position LEU fuel packages. DOE can provide the consortium with a general design for the movable SST unloading platform, called the MOX gurney, that the consortium's reactor plant owner may procure for use in removing MOX packages from SSTs. Depending on the final design of the MOX fuel package, other special handling equipment or modifications may be needed. DOE will provide designs, sufficient for procurement, for each item of special MOX package-handling equipment that is needed.

C.6 RETURN OF EMPTY MOX PACKAGES TO A MOX FABRICATION FACILITY

Because plans specify that the consortium will own the MOX packages, the consortium should be responsible for arranging return transportation for empty packages to be reloaded at its MOX fabrication facility. Whenever consistent with efficient use of SSTs, empty MOX packages could be returned to the MOX fuel facility in available SSTs. If not, commercial transportation could be arranged. The consortium should bear full responsibility for the number in service, condition, and use of MOX packages that it may own. The consortium may be expected to (1) procure packages, spare parts, and consumables; and

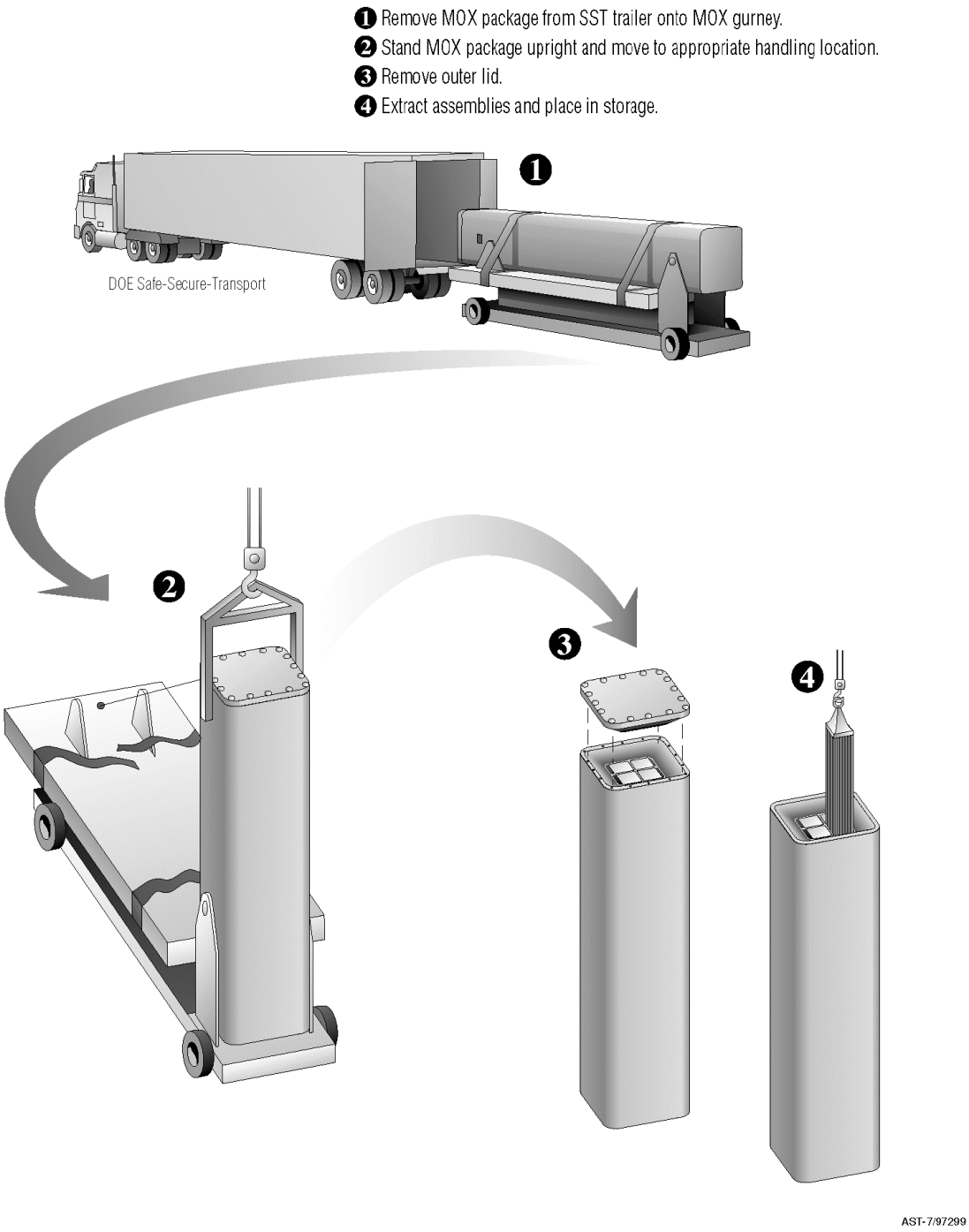

Fig. C.6. MOX fuel package handling end-loading concept.

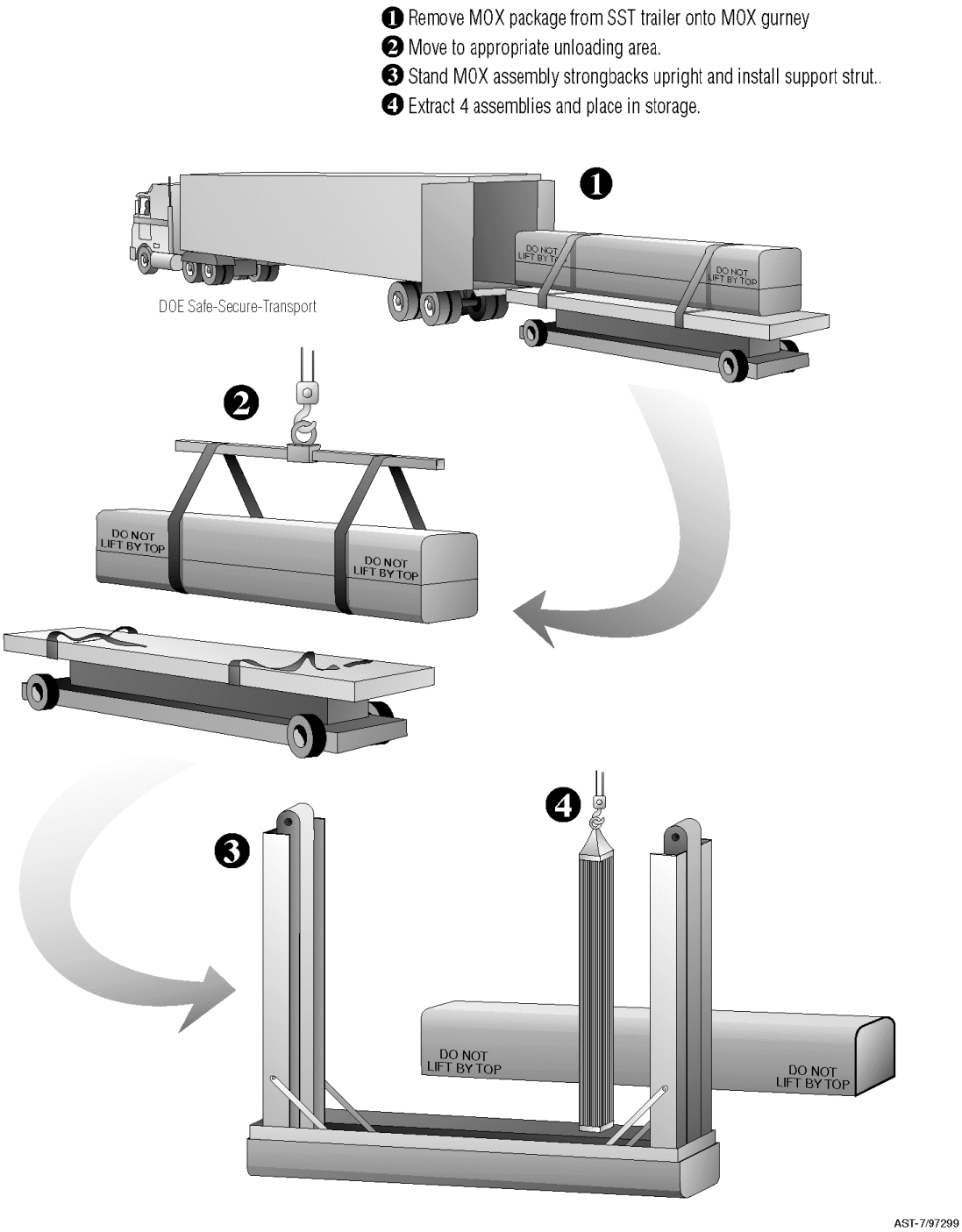

Fig. C.7. MOX fuel package handling lateral-loading concept.

(2) provide inspection and maintenance, quality assurance, recordkeeping, recertification, insurance, and package management.

C.7 RETURN OF DEFECTIVE MOX FUEL ASSEMBLIES TO A MOX FABRICATION FACILITY

Return of defective, unirradiated MOX fuel assemblies to the MOX fabrication plant, if necessary, should involve the reverse of operations required for delivery of MOX fuel assemblies to the consortium's reactor plant. DOE expects that returned full fuel assemblies will be transported in the MOX transportation package using DOE's SST transportation services.

Any irradiated MOX-fuel-bearing assembly components, MOX fuel assemblies, or fuel-bearing assembly components in which the fuel-pellet cladding has been breached would need to be transported in packages having the necessary certificate of compliance provisions. If such packages are not suitable for transport in an SST, DOE can be expected to provide alternative transportation arrangements that are mutually determined by DOE and the consortium.

REFERENCES

1. DOE Order 5610.14, "Transportation Safeguards Systems Program Operations," May 12, 1993.
2. DOE Order 5632.2A, "Physical Protection of Special Nuclear Material and Vital Equipment," February 9, 1988.
3. DOE Order 5633.3B, "Control and Accountability of Nuclear Materials," September 7, 1994.
4. 10 CFR 73.50(c)(1), "Requirements for Physical Protection of Licensed Activities, Access Requirements."
5. DOE M 5632.1C-1, II, 2, "Manual for Protection and Control of Safeguards and Security Interests," July 15, 1994.
6. DOE Order 460.1A, "Packaging and Transportation Safety."
7. 10 CFR 73, "Physical Protection of Plants and Materials."

Appendix D

OTHER MOX FUEL PACKAGES

Page Intentionally Blank

Appendix D

OTHER MOX FUEL PACKAGES

A few shipping packagings currently certified for MOX fuel were considered for the Fissile Materials Disposition Program (FMDP). These packagings are summarized in Table D.1. However, these packagings were eliminated from consideration because they could only carry two PWR assemblies and only one could be transported in a safe secure trailer (SST) or a safeguards transport (SGT). Modifying them to carry more assemblies would cause them to weigh too much for carriage in SST/SGT. The FS-69 already approaches the SST/SGT weight limit when only carrying two assemblies. The German packagings exceed the SST/SGT weight limit.

The MO-1 was considered in more depth than the other packagings. Figure D.1 shows a schematic of the MO-1 package. However, the MO-1 was also rejected because adding more fuel assemblies would necessitate a complete redesign and recertification through the Nuclear Regulatory Commission.

Because of these deficiencies in currently available packagings, it was decided that a new design would be the best way to proceed. With a packaging that could hold twice as many fuel assemblies, the total number of packagings that would be needed could be reduced, and the total number of shipments would be cut by one-half. This would result in significant cost savings during the life of the program, making it well worth the effort to design a new packaging.

Table D.1. Existing MOX fuel packagings

Country	Model No.	Certificate No.	Capacity	Max. gross weight (lb)
United States	MO-1	USA/9069/B()F	2 PWRs	8,600
France	FS-69	F/310/B(U)F-85	2 PWRs	11,600
Belgium	TNB 0176	[CH/5013/B(U)F-85]		
Germany		D/4174/B(M)F-85 D/4295/B(M)F-85 D/4310/B(M)F-85	2 PWRs	14,630
Germany		D/4298/B(M)F-85	8 BWRs	14,630

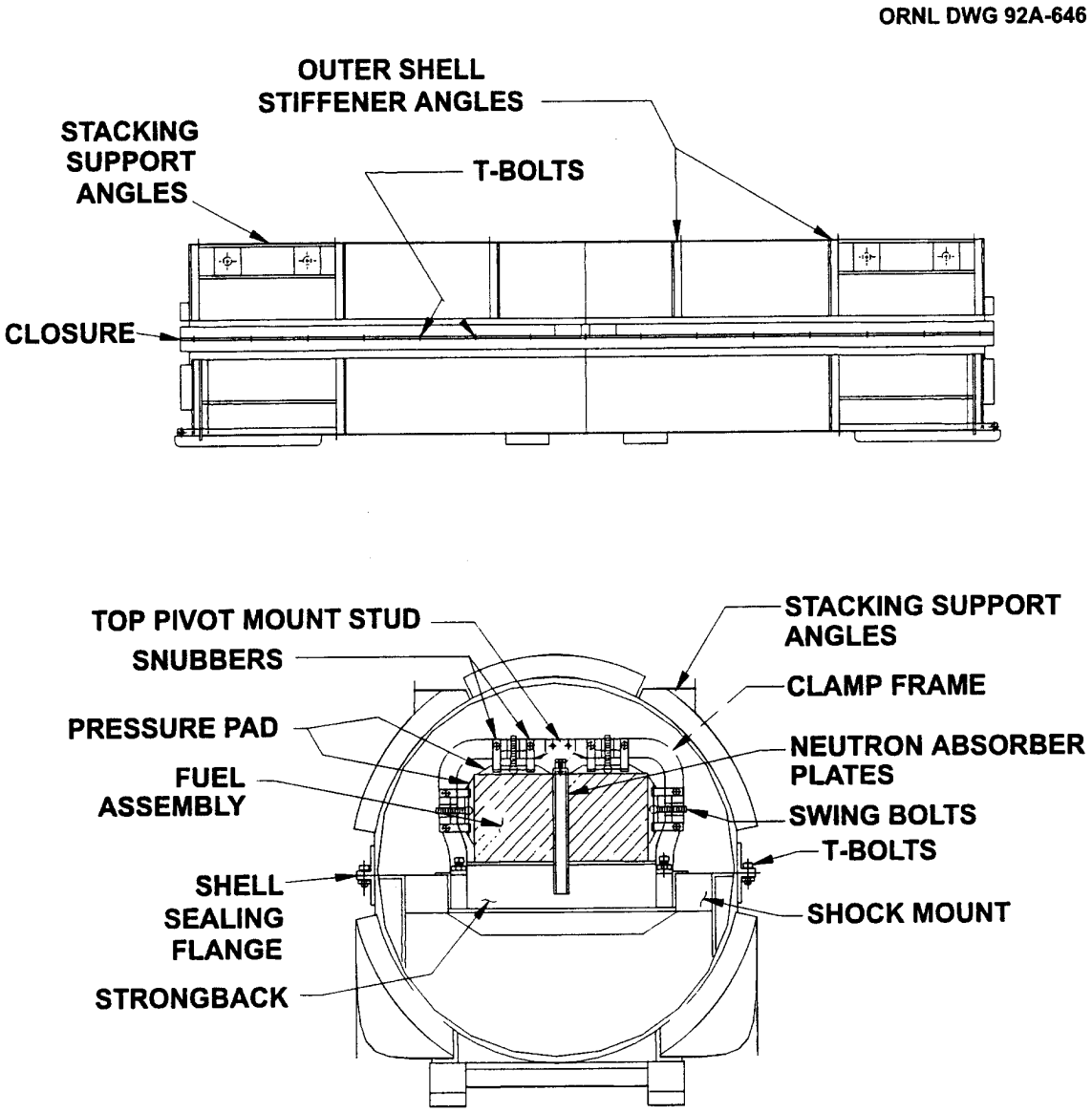

Fig. D.1. Westinghouse MO-1 package.

Appendix E

SAFEGUARDS AND SECURITY INFORMATION

Page Intentionally Blank

Appendix E

SAFEGUARDS AND SECURITY INFORMATION

The U.S. Department of Energy (DOE) Order 5633.3B[1] and NRC regulations (10 CFR 73)[2] require the protection of special nuclear materials (SNM) while in transit. Table E.1 provides a definition for safeguards categories for plutonium, as established by DOE (DOE Order 5633.3B) and by NRC [and the International Atomic Energy Agency (IAEA)]. Based on preliminary estimates of the number of MOX fuel assemblies to be transported in the proposed transport package, the amount of plutonium in the package is estimated to be between 20 and 100 kg. Based on this estimate, the transport of the MOX fuel assemblies would be classified as a Category I safeguards shipment under the NRC regulations (see Table E.2). Under DOE Orders, safeguards categories are based on plutonium quantity and attractiveness. MOX fuel, which contains between 1 g/kg and 100 g/kg of plutonium, would be assigned an attractiveness level of D (low-grade material), and the transport of the material would be classified as Category IID. DOE Orders require all Category I and Category II quantities of plutonium to be transported by a safe secure trailer (SST).

Table E.1. Safeguards categories for low-grade plutonium

DOE		NRC and IAEA	
Category	Quantity (kg)	Category	Quantity (kg)
ID	N/A	I	> 2.0
IID	>16	II	0.5–2.0
IIID	≥3, < 16	III	15 g–0.5
IVD	<3		

Table E.2. Assignment of safeguards category for MOX fuel assemblies

Fuel assembly type	Range of plutonium content per assembly (kg)	DOE Safeguard Category	NRC Safeguard Category
PWR (4 assemblies)	18.4–25.4	IID	I
BWR (8 assemblies)	2.45–4.7	IID	I

The package will incorporate an attached tamper indicating device (TID) to provide for SNM accountability of the contents.

The package is expected to be shipped by SST or safeguards transport (SGT) with a full physical security escort. Shipments will not be publicized. Notification of shipments will not be routinely made to state, local, or tribal government officials. Local law enforcement will be contacted in any safeguards emergency where the armed escort team is not able to maintain control of the shipment.

The SST/SGT is a secured vehicle with driver protective capability. If the vehicle is stopped, the tractor can be disabled and the tractor and trailer locked together. This will prevent theft of the trailer or removal with the SST/SGT tractor. This delay will allow sufficient time for the security escort and /or local law enforcement to respond to the incident.

REFERENCES

1. DOE Order 5633.3B, “Control and Accountability of Nuclear Materials,” September 7, 1994.
2. 10 CFR 73, “Physical Protection of Plants and Materials.”

Page Intentionally Blank

Appendix F

PRELIMINARY MOX FUEL PACKAGE DESIGN CONCEPTS

Page Intentionally Blank

Appendix F

PRELIMINARY MOX FUEL PACKAGE DESIGN CONCEPTS

F.1 PRELIMINARY CONCEPTS OF A MOX FUEL TRANSPORT PACKAGE

Recently, Oak Ridge National Laboratory (ORNL) has been investigating a number of possible preliminary concepts for a mixed-oxide (MOX) fresh fuel package that would maximize the number of fuel bundles [the goal has been to carry either four pressurized-water reactors (PWRs) or eight boiling-water reactors (BWRs) per package] that could be carried in the safe secure trailer (SST) or safeguards transport (SGT). Three initial concepts are reflected in Figs. F.1 and F.2.

Figure F.1 represents a very preliminary concept for a "clam shell" design. The term "clam shell" is used because the upper shell is removed to allow access to the contents. This concept is quite similar to the existing MO-1 design. Initial estimates of the loaded weight are 15,500 lb (exceeding the 13,500-lb payload limit for the SST). Continuing design efforts are primarily aimed at reducing the gross weight of this package.

Figure F.2 represents an end-loading concept. This concept has some advantages. One advantage is that the end-plug seam is small, which minimizes the length that must be sealed (this makes package certification somewhat less difficult). Also, an end-loaded package may minimize the time and personnel required during unloading operations. This concept has an estimated loaded weight of 12,200 lb. Possible disadvantages include the necessity to possibly either position the package in a recessed (below-grade) area or lift the fuel assemblies more than 20 ft above the floor. This may require changes to the elevation of fuel cranes in the plant, as well as additional safety analyses.

Figure F.3 represents a concept called the "horizontal split." It is basically two separate halves that are bolted together for transport. Although this package provides considerable protection for the fuel, it also weighs the most (estimated at 17,500 lb loaded).

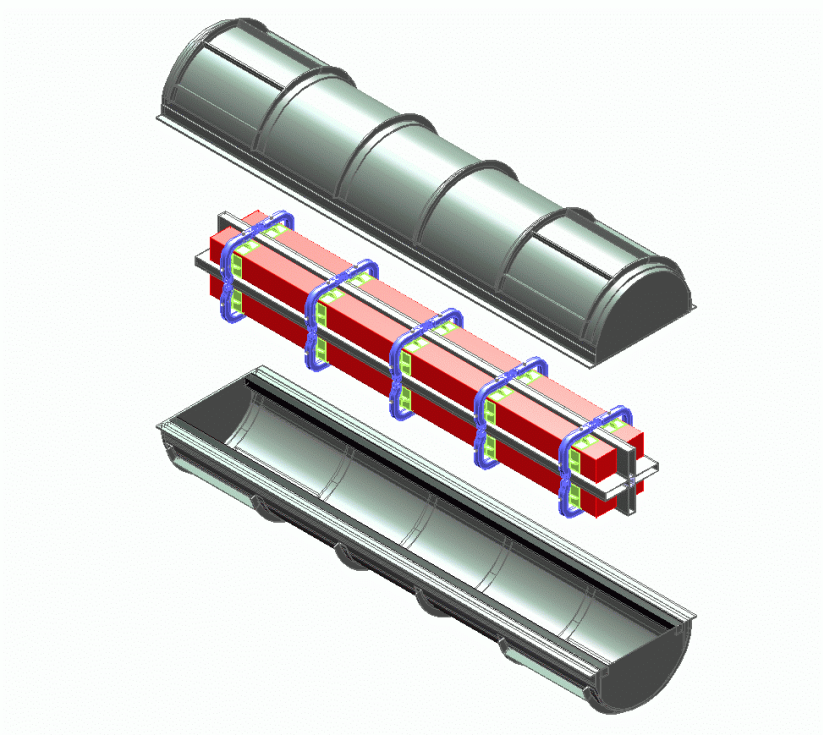

Fig. F.1. Clam shell—general arrangement.

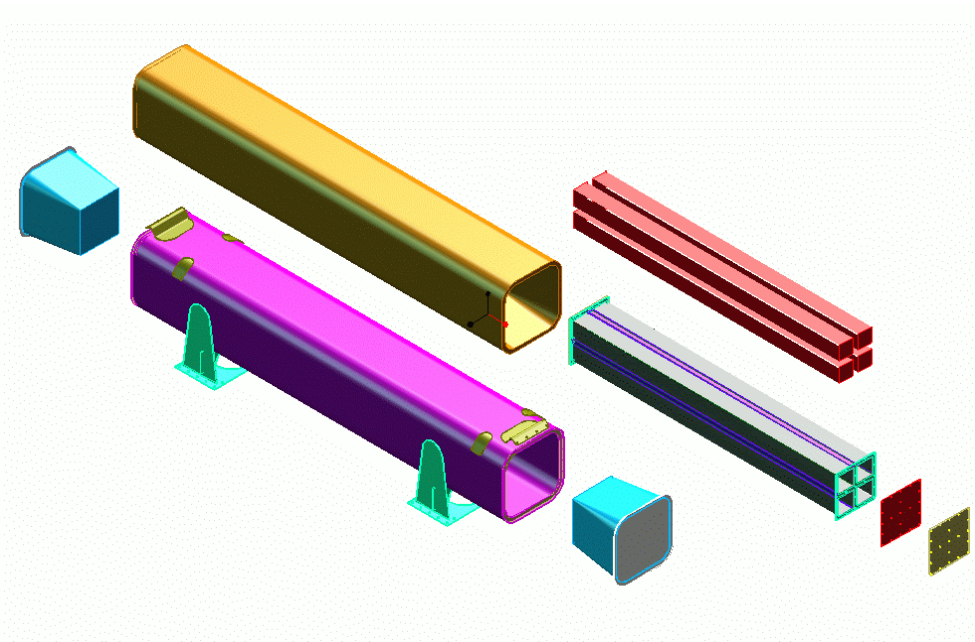

Fig. F.2. End loading—general arrangement.

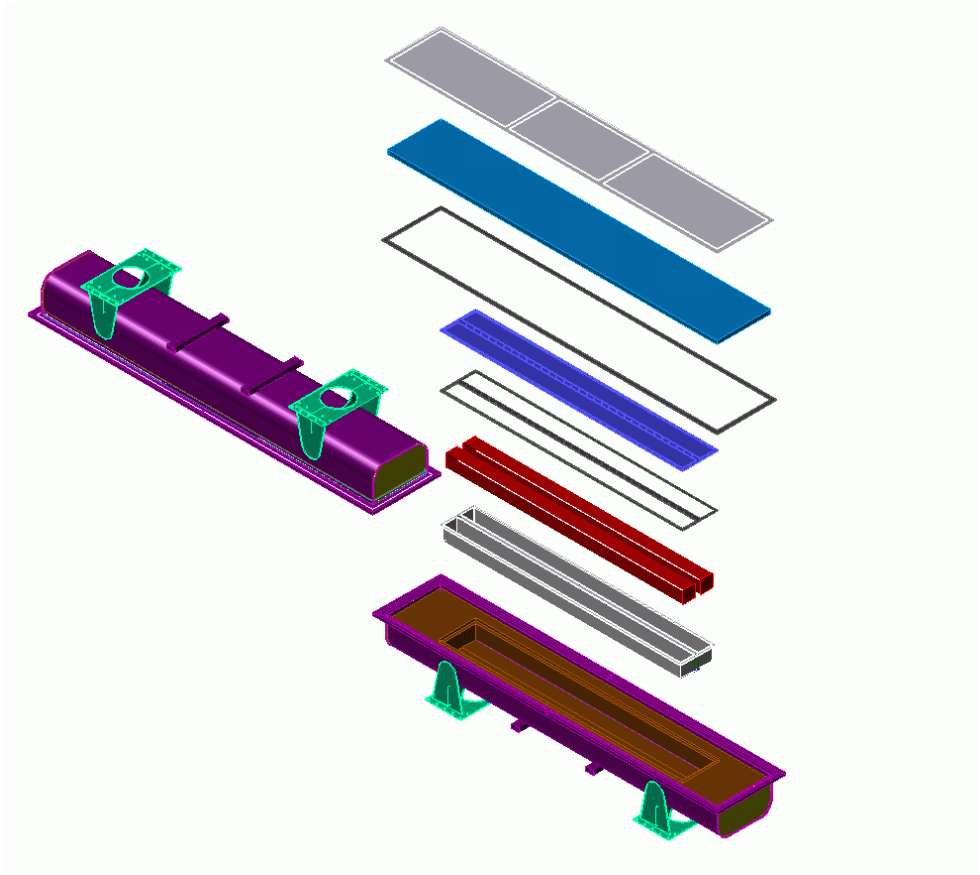

Fig. F.3. Horizontal split—general arrangement.

F.2 REVISED CONCEPTS

Because of continuing discussions between the MOX package development team, the U.S. Department of Energy Office of Fissile Materials Disposition (DOE/MD) sponsor, and other Fissile Materials Disposition Program (FMDP) participants, ORNL has been investigating some revised concepts that could minimize possible impacts on package handling at potential commercial PWRs and BWRs. The biggest concern seemed to be that the best of the initial concepts—the end-loading package—might require some undetermined additional expense to the nuclear utility in additional equipment and changes to the procedures. Therefore, ORNL has developed the following revised concept.

While the end-loading concept has not been officially eliminated [which will require review by the impacted utilities and the Nuclear Regulatory Commission (NRC) and guidance from DOE] ORNL has prepared a concept that is called the "double strongback." Initial estimates of the loaded weight of the package are between 13,300 to 13,500 lb (not optimized). It was assumed that the same criticality controls would be required (these have not explicitly been analyzed yet). Stress analyses have been performed on the strongbacks to ensure that the design is rigid enough to support the fuel. The initial PWR version would hold four MOX assemblies; the BWR version is being designed to hold eight MOX assemblies.

Figures F.4–F.12 provide a view of both PWR and BWR versions of the revised concept. While somewhat similar to the MO-1 and other low-enriched uranium (LEU) clam shell packages in terms of how the fuel is extracted from the package by positioning the internal strongback in a vertical orientation, the outer container for the double-strongback concept is not a clam shell. The package has been designed as a completely sealed inner box that contains two separate strongbacks (two PWR or four BWR assemblies per strongback). Surrounding this inner box would be the outer container. It is not nearly as elegant as the end-loading design, but it appears to provide, operationally, a minimum of impact on the handling and safety analysis at the reactor.

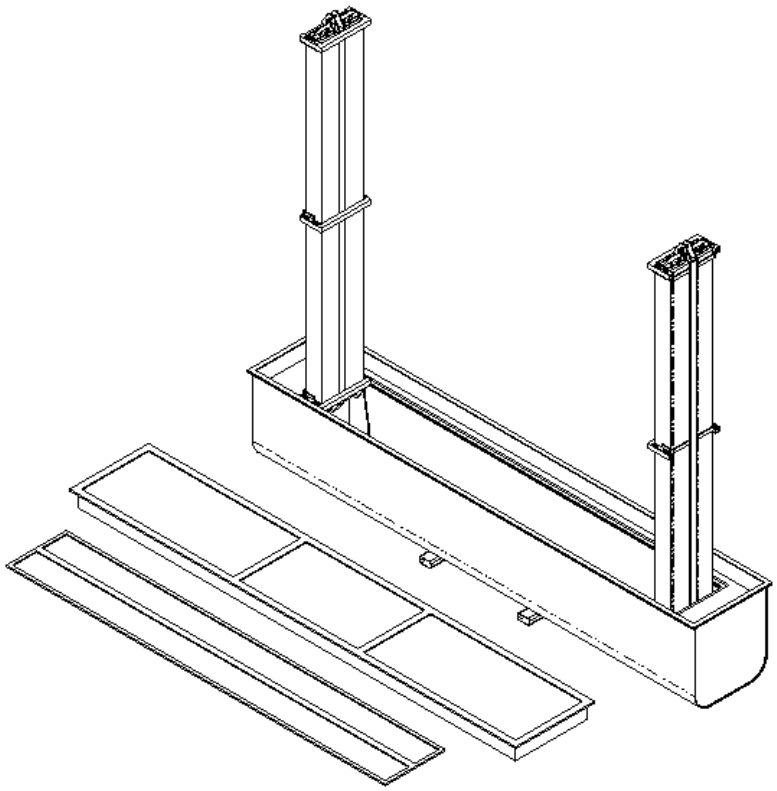

Fig. F.4. Double-strongback package for MOX fuel (PWR version).

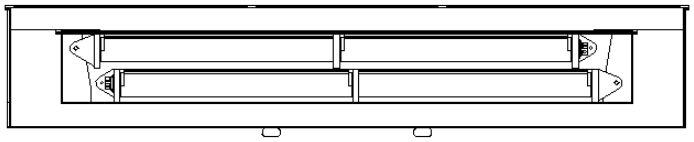

Fig. F.5. Side view of package showing double strongbacks.

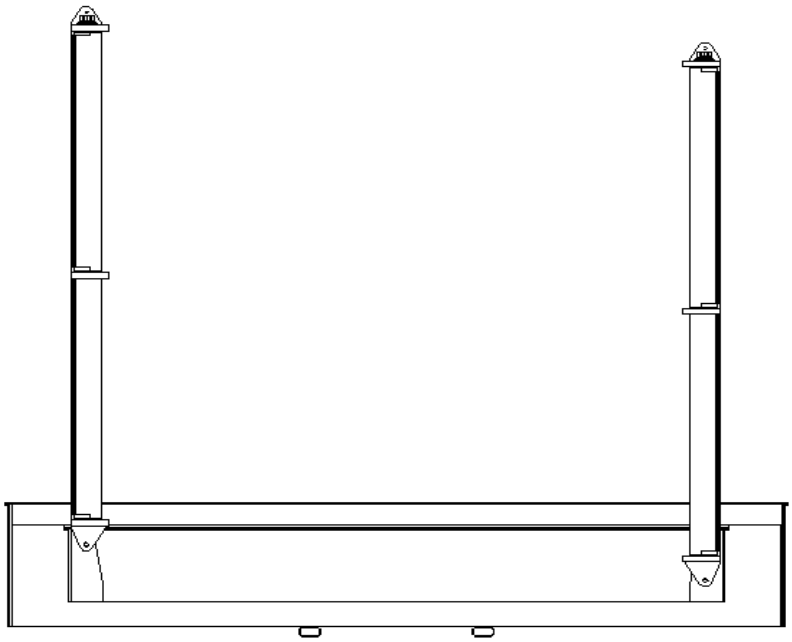

Fig. F.6. Side view of package showing elevated strongbacks (bracing is not shown).

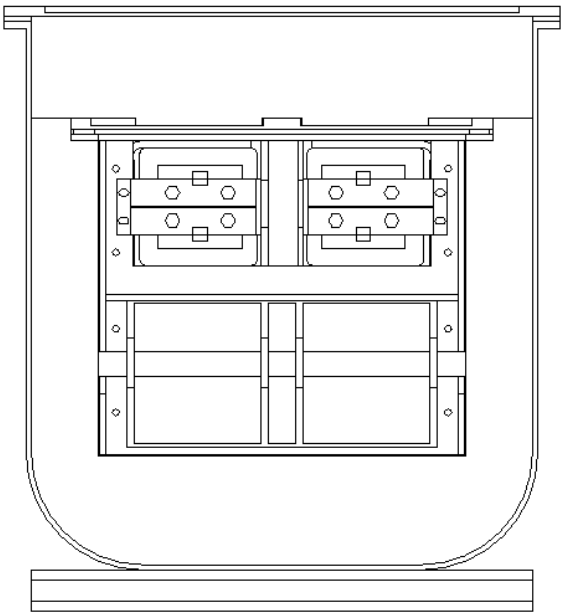

Fig. F.7. End view of double strongback (PWR version).

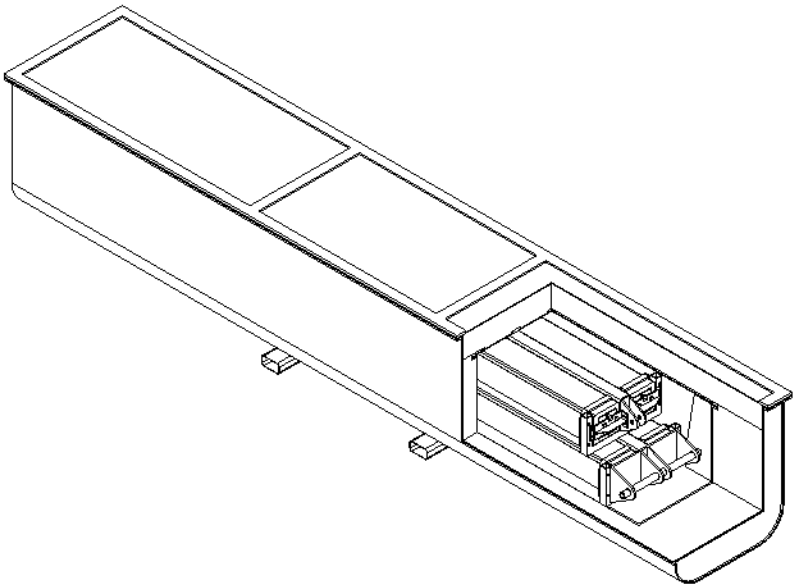

Fig. F.8. Cutaway view of PWR double strongback.

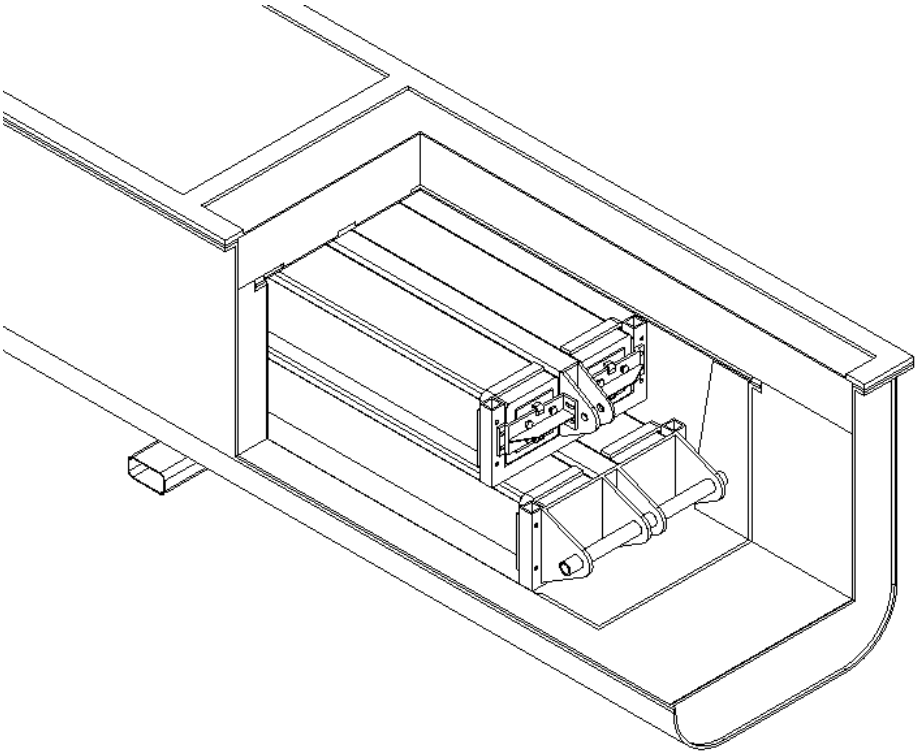

Fig. F.9. Cutaway view (close-up) of PWR double strongback.

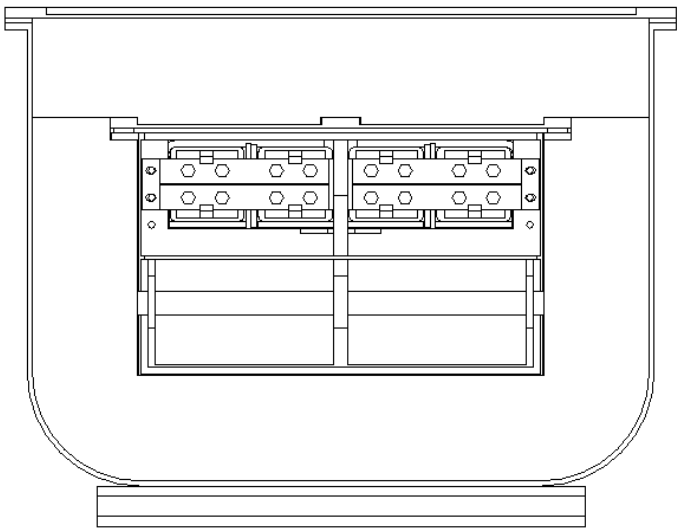

Fig. F.10. End view of double strongback (BWR version).

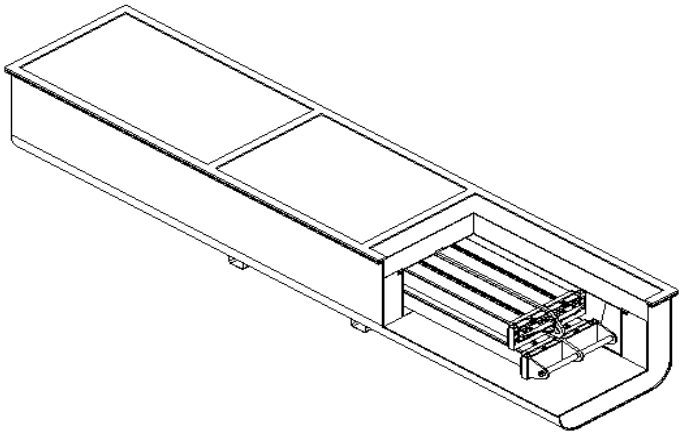

Fig. F.11. Cutaway view of BWR double strongback.

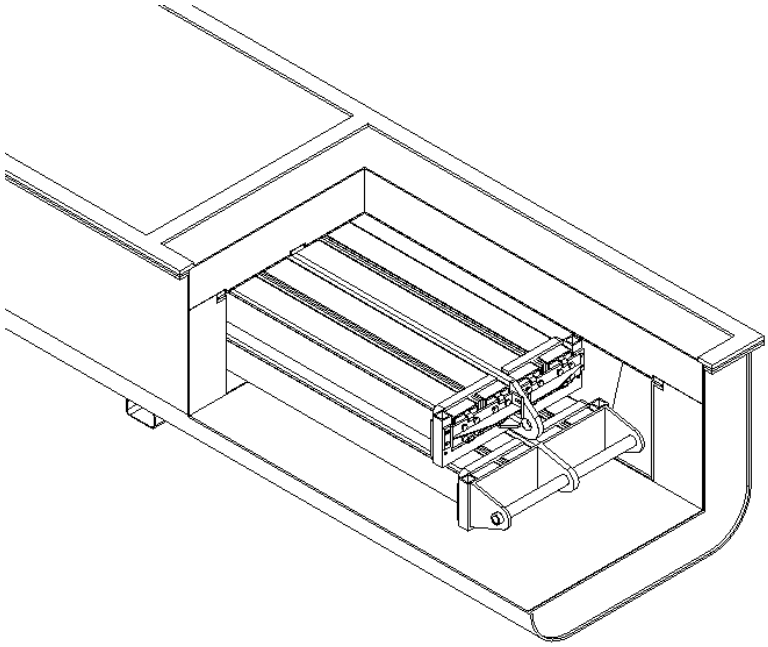

Fig. F.12. Cutaway view (close-up) of BWR double strongback.

F.3 PRELIMINARY ANALYSIS OF A MOX FUEL TRANSPORT PACKAGE

The use of borated stainless steel between fuel assemblies was first considered for criticality control, but the thickness required imposed excessive weight penalties. Borated aluminum, although lighter, still required significant thickness and added weight. Researchers concluded that the required k_{eff} could be best achieved by using a 20% boron-loaded foam with a density of 30 lb/ft^3 as spacing between the tubes holding the fuel assemblies. The PWR fuel bundles require ~2.5 in. of foam, and the PWR assemblies need ~0.5 in. Both the PWR and BWR tube assemblies are made rigid as a monolithic mass to maintain their original poison/fuel bundle geometric relationships when subjected to accident conditions.

Low-density foam (~6 lb/ft^3) was used as the suspension system for the monolithic fuel bundle tube assemblies within the outer containment. In addition to offering significant weight reduction, the intumescent characteristics of the foam will reseal the outer package wall in the event of a breach and subsequent fire.

The conceptual design was developed using Pro/E software, a three-dimensional (3-D) system that provides excellent modeling and visualization capabilities, running on a Silicon Graphics Indigo 2 workstation. The parametric features inherent to Pro/E make design modifications relatively simple. Because the 3-D design models are true solids, they can also be used directly for static and explicit finite element analysis (FEA), both structural and thermal.

A simple FEA of the postdrop test was performed on the outer container using COSMOS/M software to determine if the conceptual design is reasonable. The Pro/E design model was directly utilized for the analysis that incorporated package materials properties and the nonlinear capabilities of COSMOS/M. The energy balance analysis method was chosen because the energy required to crush the low-density foam and to deform the outer steel case must be equal to the kinetic energy developed during the known vertical drop travel.

First, the outer steel casing was deformed to the 70% linear properties limit of the foam thickness. The results of this analysis not only provided the energy required to deform the casing but also defined the shape and volume of crushed foam. This information provided the basis for selecting the particular foam density that was needed to absorb the remaining kinetic energy. Although the outer casing was deformed ~5 in., the punch did not break through the outer wall. The individual tubes that contained the fuel assemblies were not damaged.

The software and equipment used for this analysis were COSMOS/M Version 1.75A running on a Silicon Graphics Onyx VTX 4 R4400/150-MHz IP 19 parallel processor machine.

Appendix G

PLUTONIUM DISPOSITION SHIPMENT STRATEGIES

Page Intentionally Blank

Appendix G

PLUTONIUM DISPOSITION SHIPMENT STRATEGIES

The following paragraphs provide a broad overview of the transportation and packaging of plutonium materials that support the disposition of U.S. surplus plutonium via the mixed-oxide (MOX) fuel alternative.

G.1 TRANSPORTATION SYSTEM

The transportation system, as described subsequently and shown in Fig. G.1, will require extensive use of the Department of Energy's (DOE's) safe secure trailer (SST) fleet for the transport of all plutonium materials prior to their irradiation in the reactor. The quantity of plutonium to be shipped, in whatever form, has been determined to exceed the definition of strategic special nuclear materials (Category I). Category I quantities of special nuclear material (SNM) require the highest level of transport security, using special armored transport vehicles and other measures to ensure security (as specified in 10 CFR Part 73).[1] At present, the DOE's SSTs, which exceed the requirements of 10 CFR 73, are the only available Category I transport system in the United States. The following sections describe shipment requirements on a leg-by-leg basis.

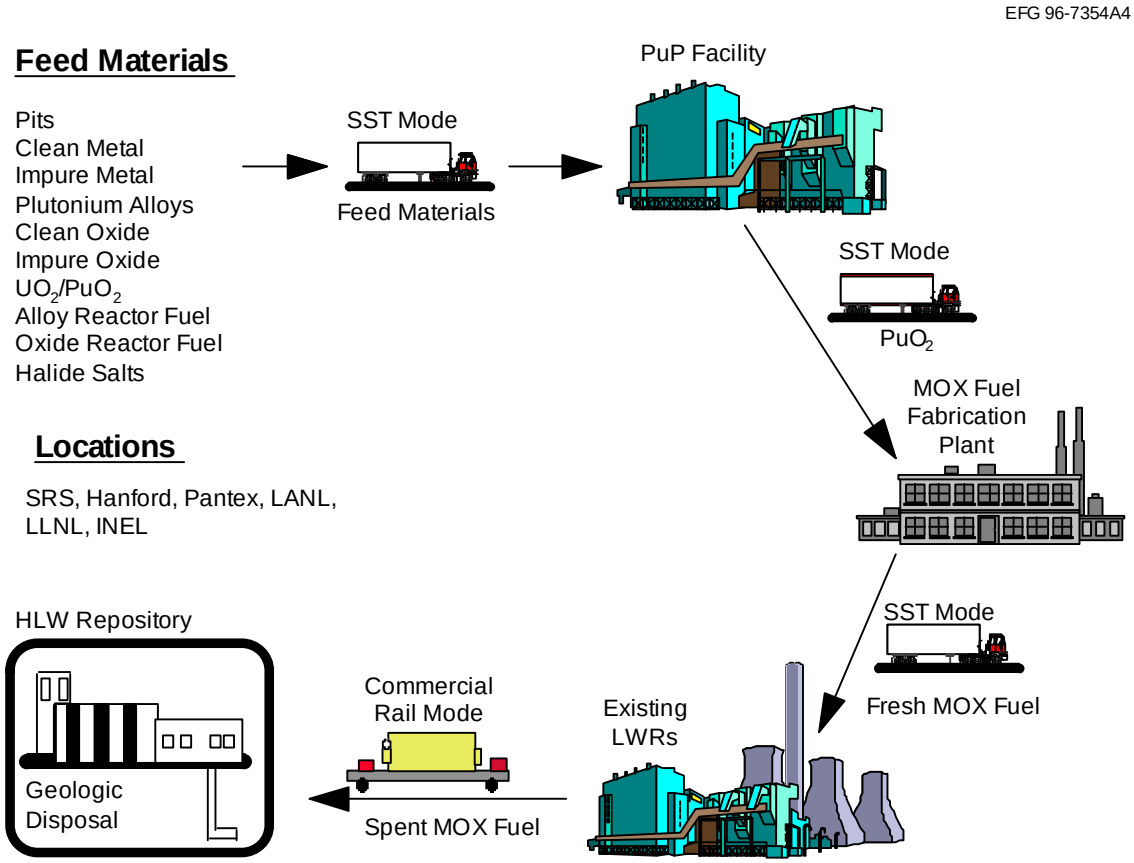

Fig. G.1. Simplified flowchart showing transportation segments for reactor disposition alternatives.

G.1.1 Feed Materials Transport Leg

As shown in Fig. G.1, excess fissile materials located at various DOE facilities include pits, clean metal, impure metal, plutonium alloys, clean oxide, impure oxide, UO_2/PuO_2, alloy reactor fuel, oxide reactor fuel, and halide salts and oxides. Because of the variety of materials involved, no single Type B package design is appropriate. Therefore, DOE will use a number of different package designs.

Packages. Excess pits from dismantled nuclear weapons under the Fissile Materials Disposition Program (FMDP) will be stored and transported in the Model FL or the newer AT-400A container. The various pits can use these containers by using different internal containers. The remaining (nonpit) weapons-grade plutonium is assumed to be in storage at various DOE facilities. This material is assumed to be stored in a form/storage container that meets the requirements of DOE 3013 Standard.[2] The criteria state that all plutonium metal and oxides (excluding pits) shall either be sealed (a) in a material container nested in a boundary container (until a primary containment vessel can be used) or (b) in a boundary container nested in a primary containment vessel (PCV). The design goal for the boundary container (like the traditional crimp-sealed "food can") and the PCV storage package is that the entire package should be maintenance free and be either compatible with a common transport package or transportable without additional repackaging.

Historically, DOE has used many different configurations of the Department of Transportation (DOT) Specification 6M packages for the transport of plutonium (nonpit) materials. Such configurations, as specified in Ref. 3, were approved for use by DOE. The DOT Specification 6M, as defined in 49 CFR 178.354,[4] when used with a DOT Specification 2R inside containment vessel (per 49 CFR 178.360),[5] as a "Specification Package" under DOT regulations, does not require the formal certification process for new package designs. Under Nuclear Regulatory Commission (NRC) regulations, special requirements for plutonium shipments specify [per 10 CFR 71.63(b)][6] that plutonium shipments in excess of 20 Ci (~30 g for weapons-grade plutonium) must be shipped as a solid and must be shipped in a separate inner container that is placed within the outer packaging. The separate inner container must be demonstrated to be leak tight (not releasing its radioactive contents to a sensitivity of 10^{-6} A_2/h). Reactor fuel elements and metal or metal alloy forms of plutonium are exempt from this requirement. In terms of the Specification 6M package (including its Specification 2R inside containment vessel), the NRC regulations impose the additional requirement that for dispersible forms of plutonium, such as plutonium oxide, a "double-containment" package is required.

Some new package designs, using either single or double containment, have been certified for use or are under development. The 9975 package, shown in Fig. G.2, is a double-containment plutonium package developed by the Savannah River Company. The 9975 package is just one of many new-generation packages that have been developed to provide the double containment necessary for nonmetal or nonalloy plutonium materials. Identification of the actual packages needed to ship the various plutonium materials (feed materials) from the various DOE storage locations to the plutonium processing facility will be performed at some point following the completion of DOE's implementation of the Defense Nuclear Facilities Safety Board's (DNFSB's) Recommendation 94-1 to stabilize the plutonium materials currently in storage.

G.1.2 PuO_2 Transport Leg

Following conversion of plutonium to PuO_2, the PuO_2 will be repackaged (using many of the same packages previously identified and shipped to the MOX fuel fabrication plant. The MOX fuel fabrication plant will operate on a schedule similar to the reactor operation schedule (between 10 and 18 years in most cases). This will require that some of the PuO_2 be placed in a lag storage vault because the shipment campaign will be completed in 10 years. The lag storage vault could be accommodated in the design of the MOX fuel fabrication plant design, or DOE could choose to use excess vault capacity at another DOE site that would be available.

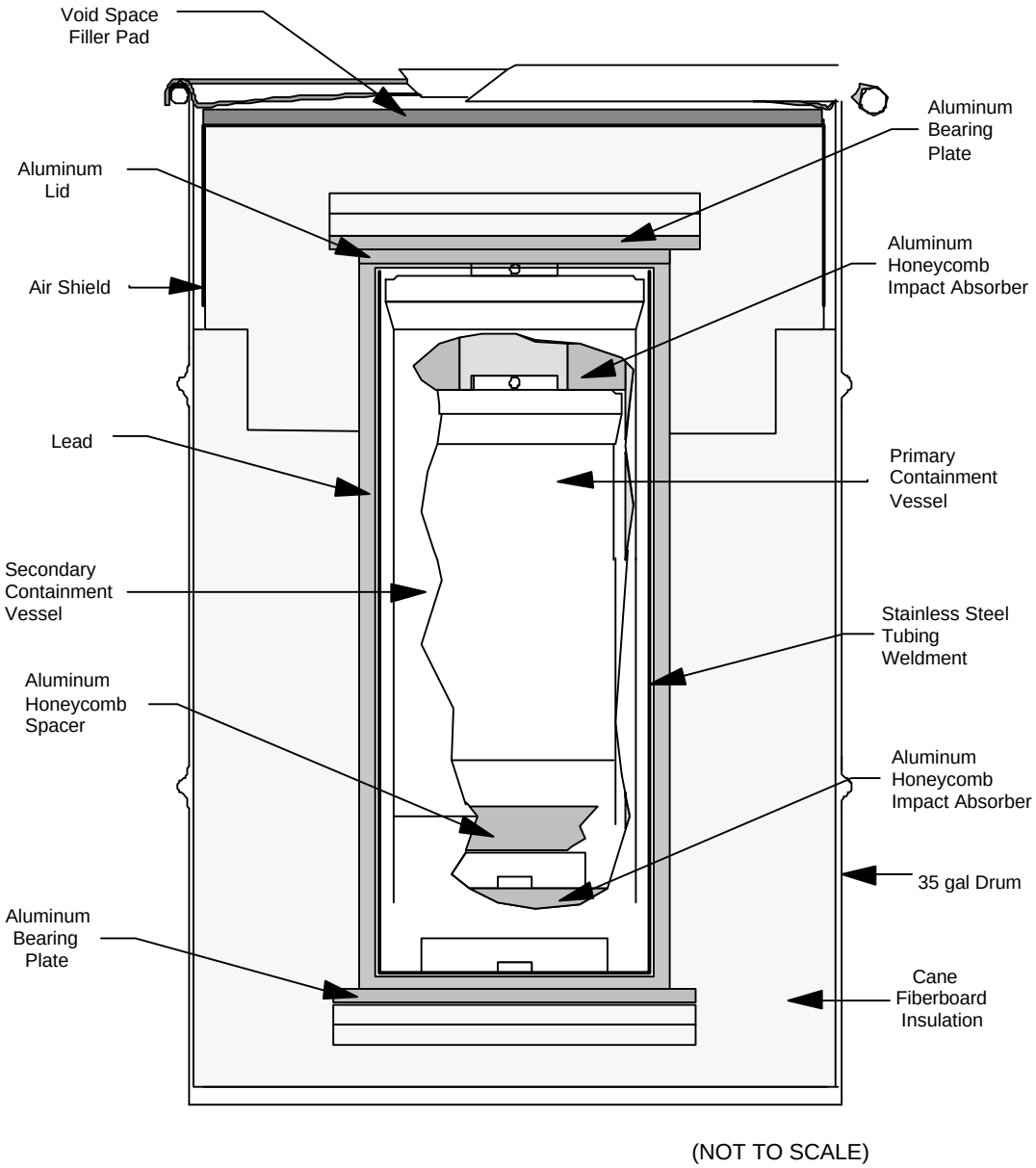

Fig. G.2. Cross-sectional view of 9975 package.

G.1.3 Fresh MOX Fuel Transport Leg

The MOX fuel assemblies will be shipped from the MOX fuel fabrication facility to each of the power reactors. The MOX fuel assemblies will be shipped in a newly designed and certified package. Because currently certified packages hold only two PWR MOX assemblies per package, a package that will hold more assemblies is desirable. Transport of the fresh MOX fuel will occur via SST or SGT. Only a single package can be accommodated per SST or SGT, based on limitations of net payload and package dimensions.

For alternative analysis purposes, it can be assumed that the excess plutonium is in interim storage at many locations within the DOE complex. This material is first packaged and transported to a plutonium processing facility (assumed to be located at SRS), where the material is converted to PuO_2. The PuO_2 is then repackaged and transported to the MOX fuel fabrication plant or is shipped to another facility for alternative disposition.

REFERENCES

1. 10 CFR 73, "Physical Protection of Plants and Materials."
2. *The Criteria for the Safe Storage of Plutonium Metals and Oxides*, DOE-STD-3013-96.
3. *User's Guide for Shipping Type B Quantities of Radioactive and Fissile Material, Including Plutonium, in DOT 6M Specification Packaging Configurations*, DOE/RL-94-68, September 1994.
4. 49 CFR 178.354, "Specification 6M; Metal Packaging."
5. 49 CFR 178.360, "Specification 2R; Inside Containment Vessel."
6. 10 CFR 71.63(b), "Special Requirements for Plutonium Shipments."

Appendix H

DOMESTIC AND INTERNATIONAL TRANSPORT REGULATIONS

Page Intentionally Blank

Appendix H

DOMESTIC AND INTERNATIONAL TRANSPORT REGULATIONS

This appendix will discuss the possibility that at some time this packaging might be shipped to and from a foreign country and as such may have to meet the International Atomic Energy Agency (IAEA) ST-1 requirements. Because the U.S. regulations have recently undergone revisions to make them compatible with the IAEA regulations, imposition of IAEA regulations is not likely to affect the packaging design to any great extent. However, the packaging design may be affected by the interface with the foreign facility that would be required to handle the package. In addition, because this packaging may be used for the transport of fresh MOX fuel from a European fabricator, the emerging Irradiated Nuclear Fuel (INF) Code of the International Maritime Organization (IMO) should be considered during packaging design. The salient facets of the IMO code will be summarized here.

Page Intentionally Blank

Appendix I

SAFE TRANSPORT OF RADIOACTIVE MATERIALS

Page Intentionally Blank

Appendix I

SAFE TRANSPORT OF RADIOACTIVE MATERIALS

Safe transport of radioactive materials is accomplished by use of specially designed packages that meet strict requirements. Radioactive material packaging regulations provide for use of containers whose performance requirements are proportional to the radiological risk of the material each package is to contain. Low levels of radioactive materials are packaged for shipment in strong, tight containers to protect the radioactive contents under a variety of normal transportation conditions. Much more stringent requirements are imposed on shipments of highly radioactive materials, such as spent nuclear fuel (SNF), or large quantities of dangerous materials, such as plutonium. These quantities of materials must be shipped in containers that can withstand the most severe accident conditions. Determination of the type of container needed is a function of the quantity and identity of the radionuclides to be shipped. For shipments containing radionuclides in quantities that exceed the Table of A_1 (for special form) or A_2 (for normal form) values (49 CFR 173.435[1] or 10 CFR 71, Appendix A[2]), a Type B package is required. Spent fuel casks are Type B packages. For fissile materials, such as plutonium, many different acceptable Type B packages have been certified. Type B packages are carefully reviewed from design to fabrication before certification for use by either the Nuclear Regulatory Commission or Department of Energy (DOE). Before it can be certified, the container must meet rigorous engineering and safety criteria and be capable of passing a sequence of very severe hypothetical accident conditions. Accident tests for Type B packages, administered in sequence, include:

- a 9-m (30-ft) free fall onto an unyielding surface (which is roughly equivalent to a crash into a concrete bridge abutment at 120 miles/h), followed by
- a puncture test allowing the package to free fall 1 m (40 in.) onto a steel rod 15 cm (6 in.) in diameter, followed by
- a 30-min exposure at 800°C (1475°F) that engulfs the entire package, followed by
- submergence of that same container under 0.9 m (3 ft) of water for 8 h.

A separate, undamaged container is also subjected to immersion in 15 m (50 ft) of water for 8 h. For certification, a package must not release any of its contents during the hypothetical accident testing.

Figure I.1, shows the hypothetical accident tests used for Type B packages. Many different containers have been successfully certified as Type B packages for radioactive materials. Each design provides considerable protection from the accidental release of radioactivity. To demonstrate that Type B packages (such as the robust packages used to transport SNF) can withstand a severe accident, DOE has performed a number of accident tests to simulate severe conditions. Analyses have shown that the hypothetical regulatory tests simulate 100% of the mechanical and 99% of the thermal conditions that could realistically be experienced in the field. Because these hypothetical tests are performed in sequence, the maximum level of conservatism is considered to be achieved.

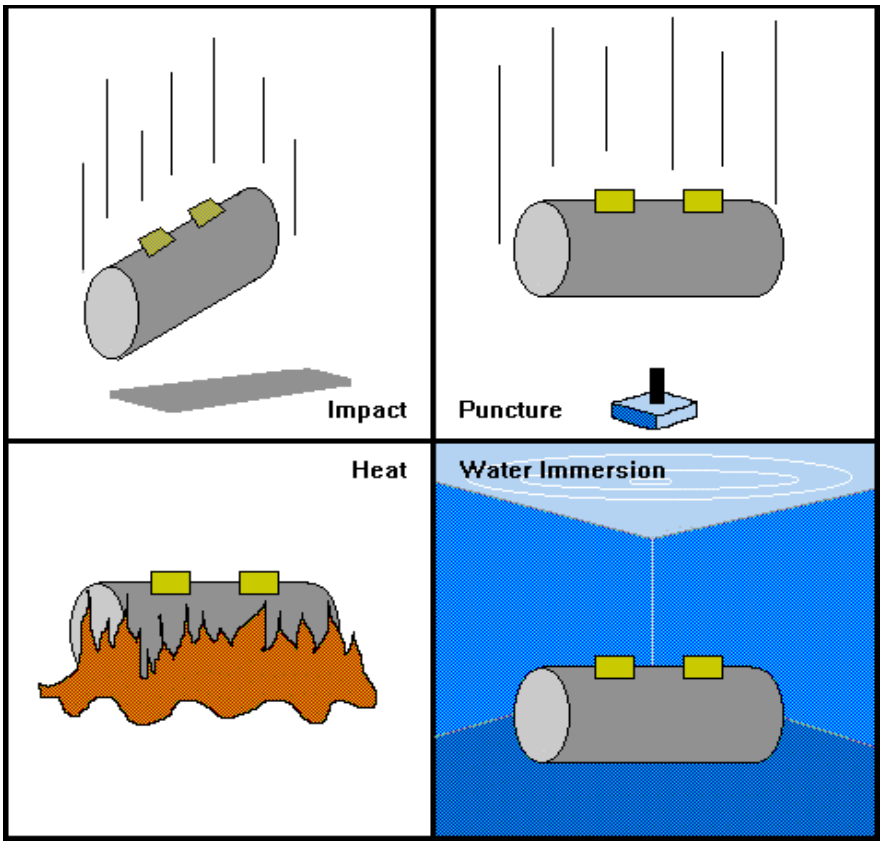

Fig. I.1. Accident tests for Type B packages.

REFERENCES

1. 49 CFR 173.435 (Table A_1 and A_2 values for radionuclides).
2. 10 CFR 71, Appendix A (Table A_1 and A_2 values for radionuclides).

ORNL/TM-13526
Dist. Category UC-523

INTERNAL DISTRIBUTION

1. J. M. Begovich
2. B. B. Bevard
3. B. L. Broadhead
4. S. L. Byerly
5. J. J. Carbajo
6. J. M. Cash
7. S. M. Chae
8. B. S. Cowell
9. A. G. Croff
10. L. S. Dickerson
11. C. W. Forsberg
12. E. C. Fox
13. S. R. Greene
14. S. A. Hodge
15. R. F. Holdaway
16. A. M. Krichinsky
17–21. S. B. Ludwig
22. G. T. Mays
23. L. E. McNeese
24. G. E. Michaels
25. R. D. Michelhaugh
26. D. G. OíConnor
27. C. V. Parks
28. R. B. Pope
29. R. T. Primm III
30. L. B. Shappert
31. B. H. Singletary
32. P. T. Singley
33. C. C. Southmayd
34–38. D. J. Spellman
39. K. A. Williams
40. D. L. Williams
41. Central Research Library
42ñ43. ORNL Laboratory Records (OSTI)

EXTERNAL DISTRIBUTION

44–45. P. T. Rhoads, U.S. Department of Energy, MD-3, Forrestal Building, Room 6G-050, 1000 Independence Avenue SW, Washington, DC 20585.
46–48. J. H. Thompson, U.S. Department of Energy, MD-3, Forrestal Building, Room 6G-050, 1000 Independence Avenue SW, Washington, DC 20585.
49. T. Barr, U.S. Department of Energy, EPG, Argonne National Laboratory, 9800 South Cass Avenue, Argonne, IL 60439.
50. B. Selby, U.S. Department of Energy, EPG, Argonne National Laboratory, 9800 South Cass Avenue, Argonne, IL 60439.
51. D. Alberstein, Los Alamos National Laboratory, P.O. Box 1663, MS-K551, Los Alamos, NM 87545.
52. J. J. Buksa, Los Alamos National Laboratory, P.O. Box 1663, MS-K551, Los Alamos, NM 87545.
53. S. L. Eaton, Los Alamos National Laboratory, P.O. Box 1663, MS-K551, Los Alamos, NM 87545.
54. L. L. Luna, Sandia National Laboratories, MS-0790, P.O. Box 5800, Albuquerque, NM 87185-0790.
55. J. W. Moyer, Sandia National Laboratories, MS-0790, P.O. Box 5800, Albuquerque, NM 87185-0790.
56. R. E. Best, Science Applications International Corp., P.O. Box 2501, 800 Oak Ridge Turnpike, Oak Ridge, TN 37831-2501.
57. C. G. Cowart, Science Applications International Corp., P.O. Box 2501, 800 Oak Ridge Turnpike, Oak Ridge, TN 37831-2501.
58. S. P. Schmid, Science Applications International Corp., P.O. Box 2501, 800 Oak Ridge Turnpike, Oak Ridge, TN 37831-2501.

WWW DISTRIBUTION

The FMDP Web site, with a list of relevant topical reports, is located at the following URL:
http://www.ornl.gov/etd/FMDP/fmdpproc.htm