DOE/NV/10872--T186

TABLE OF CONTENTS

Task B.2.1

Investigation of Post Closure Stress in a Backfill Circular Tunnel Due to Overburden & Thermal Loading of Horizontally Placed 21PWR Multi-Purpose Canisters

Dr. Richard Wyman, P.E.
Nadia Kandalaft-Ladkany

Task B.2.2

Investigation of Faulted Tunnel Models by Combined Photoelasticity and Finite Element Analysis

Dr. Samaan Ladkany, P.E.
Yuping Huang

DISCLAIMER

DISCLAIMER

Portions of this document may be illegible in electronic image products. Images are produced from the best available original document.

PUBLICATIONS BY THE DOE NUCLEAR WASTE PACKAGE PROJECT FACULTY, STAFF AND STUDENTS

1. Bergman, D., "A Study of a Container For Long Term Storage of High-Level Waste Using Finite Elements", M.S.E. Thesis, Department of Mechanical Engineering, University of Nevada, Las Vegas, Spring 1991, 72 pages.

2. Bhargava, Akshay, M.S.E. Thesis, "Consideration in the Drift Due to the Emplacement of Horizontal High Level Nuclear Container."

3. Cardle, J., "Overview of Simplified Thermal Hydraulic Code", Performance Assessment Flow and Transport Modeling Workshop, May 5-6,h 1992.

4. Cardle, J., "A Galerkin Method For The Convection - Diffusion Equation Using Asymmetric Weighting Functions", High-Level Radioactive Waste Management Conference & Exposition IV, April 1993.

5. Channarayapatna, Shashidhar S., M.S.E. Thesis, "Expirmental Verfication of Structal Response of a Flexiable Three-Link Hydraulic Steel Robot." January 1995.

6. Culbreth, W.G., Chagari, A., "Labeling of the Spent Fuel Waste Package", Proceedings of the 3rd International High-Level Nuclear Waste Conference, Las Vegas, March 1992.

7. Culbreth, W.G., Zielinski, P.R., "The Importance of Criticality in the Design of the Spent Fuel Waste Container", Scientific Basis for Nuclear Waste Management XVI, Materials Research Society, pp. 73-78, vol 294, 1993.

8. Culbreth, W. G., and Zielinski, P., "Analysis of the Criticality of a Spent Fuel Waste Package using Mathcad for Windows," Ninth ICMCM, Berkeley, CA, July 1993.

9. Culbreth, W. G., "Computational Heat Transfer Studies of the Proposed Nuclear Waste Repository," Ninth ICMCM, Berkeley, CA, July 1993.

10. Culbreth, W.G., and Zielinski, P.R., "The Effect of Fuel Burnup and Dispersed Water Intrusion on the Criticality of Spent High Level Nuclear Fuel in a Geologic Repository," 1993 Materials Research Society Fall Meeting, V, Boston, MA, November 30.

11. Culbreth, W.G., Bhagi, B.K., Kanjerla, A., "Review of Advanced Techniques For Waste Canister Labeling", High-Level Radioactive Waste Management Conference, May 1994.

12. Culbreth, W.G., Pattisam, S., "Experimental Heat Transfer and Fluid Flow Over Drift-Emplaced Canisters", High-Level Radioactive Waste Management Conference, May 1994.

13. Culbreth, W.G., Zielinski, P., "Long-Term Effects of Neutron Absorber and Fuel Matrix Corrosion on Criticality", High-Level Radioactive Waste Management Conference, May 1994.

14. Zielinski, P., and Culbreth, W. G, "Calculation of k_{eff} For Plutonium in High-Level Waste Packages", High-Level Radioactive Waste Management Conference, May 1994.

15. Culbreth, W.G. and Zielinski, P. R. "Long-Term Effects of poison and Fuel Martrix Corrosion on Criticality," Proceedings of the Fifth Annual International High-Level Radioactive Waste Management Conference, 1994.

16. Zielinski, P.R. and Culbreth, W.G., "Calculation on keff for Vitrified Plutonium Waste Packages," Proceedings of the Fifth Annual International High-Level Radioactive Waste Management Conference 1994.

17. Culbreth, W.G., Pattisan, S., Jones, M.J., "Expirmental Heat Transfer and Fluid Flow over Drift-Emplaced Canisters," Proceedings of the Fifth Annual International High-Level Radioactive Waste Management Conference 1994.

18. Culbreth, W.G., and Bhagi, B., "Review of Advanced Techniques of Waste Cansisters Labeling". Proceedings of the Fifth Annual International High-Level Radioactive Waste Management Conference 1994.

19. James, D.E., Skaggs, R.L., Mohansingh, S., "Multi-Barrier Borehole Canister Designs For A Tuff Repository", High-Level Radioactive Waste Management, May 1994.

20. Joseph, M., "Heat Pipe Effect in Porous Medium", M.S. Thesis, Department of Civil and Environmental Engineering, University of Nevada, Las Vegas, December 1992, 84 pages.

21. Kandalaft-Ladkany, N., "Design Management and Stress Analysis of a Circular Rock Tunnel For Storage of Spent Nuclear Fuel", M.S.E. Thesis, Department of Civil and Environmental Engineering, University of Nevada, Las Vegas, Spring 1991.

22. Kandalaft-Ladkany, N., Wyman, R.V., "Design Management and Stress Analysis of a Circular Rock Tunnel For Storage of Spent Nuclear Fuel", Proceedings of High-Level Radioactive Waste Management, 1992, ANS and ASCE, pp. 2260-2266.

23. Kandalaft-Ladkany, N., Wyman, R.V., Ladkany, S.G., "Investigation in 3-D of Stress Distribution in a Circular Tunnel and Vertical Emplacement Holes Due to Thermal and Overburden Loading in Tuff", Proceedings of High-Level Radioactive Waste Management, 1993, ANS and ASCE, pp. 893-899.

24. Kandalaft-Ladkany, N., Wyman, R.V., "Investigation of Stress In a Circular Tunnel Due To Overburden and Thermal Loading of Horizontally Placed 21 PWR Multi Purpose Canisters", High-Level Radioactive Waste Management, 1994, ANS and ASCE.

25. Kandalaft-Ladkany, N., Wyman, R.V., "Themal Stress in Backfill Circlar Tunnel Due to 21 PWR MPC's", High Level Radioactive Waste Management, 1995, ANS and ASCE.

26. Kona, Rajsekhar., M.S.E. Thesis, " Conceptual Models of Fluid Flow in Fractures," May 1994.

27. Kniss, B., M.S.E. Thesis, "A Study of a Container For Long Term Storage of High-Level Nuclear Waste Using Finite Elements", Department of Civil and Environmental Engineering, University of Nevada, Las Vegas, June 1991.

28. Ladkany, S.G., Kniss, B.R., "Critical Stresses in Pintle, Weldment, and Tophead of Nuclear Waste Container", Proceedings of High-Level Radioactive Waste Management, 1993, ANS and ASCE, pp. 1253-1260.

29. Ladkany, S.G., Gan, P., Rajagopalan, R., "Critical Stresses in Nuclear Waste Container Under Normal Handling Conditions", Proceedings of High-Level Radioactive Waste Management, 1993, ANS and ASCE, pp. 905-912.

30. Ladkany, S.G., Rajagopalan, R., "On the Structural Stability of Large Steel Nuclear Waste Containers", DOE Waste Package Project, University of Nevada, Las Vegas,

Structural Stability Research Council, April 1993.

31. Ladkany, S.G., Rajagopalan, R., "Structural Performance of a Multipurpose Canister Shell For HLNW Under Normal Handling Conditions", High-Level Radioactive Waste Management, 1994, ANS and ASCE.

32. Ladkany, S.G., Huang, Y., "Investigation of Faulted Tunnel Models By Combined Photoelasticity and Finite Element Analysis", High-Level Radioactive Waste Management, 1994 ANS and ASCE.

33. Ladkany, S.G., Channarayapatna, Shashidhar S., "Expirmental Verification of Hydraulic Robot for Remote Handling of High Level Nuclear Waste", High-Level Radioactive Waste Management, 1995 ANS and ASCE.

34. Ladkany, S.G., Huang, Y., Stresses in Faulted Tunnels Models by Photoelasticity and Adaptive Finite Element", High-Level Radioactive Waste Management, 1995 ANS and ASCE.

35. Ladkany, S.G., Rajogopalan, R., "Failure of MPC Overpack and Inner Container Under Corrosion and Mechanical Stresses in a Backfilled Drift", High-Level Radioactive Waste Management, 1995 ANS and ASCE.

36. Lei, Yao M., Thesis, "Heat Transfer in Vertical Concertric Cylinders in a High Level Nuclear Waste Repository." December 1994

37. Mohansingh, Suneeta, M.S.E. Thesis, "Mechanical and Cathodic Projection Aspects of Multi-Barrier Tuff Respository Canicster Designs," August 1994.

38. Moujaes, S., Lei, Y., "Heat Transfer in Vertical Concentric Cylinders in a High-Level Nuclear Waste Repository", High-Level Radioactive Waste Management Conference & Exposition IV, April 1993.

39. Moujaes, S., Bhargava, A., "Simulation of Heat Transfer Around a Canister Placed Horizontally In a Drift", High-Level Radioactive Waste Management Conference & Exposition, May 1994.

40. Moujaes, S., Lei, Y., "Heat Transfer Effects in

Vertically Emplaced High-Level Nuclear Waste Container", High-Level Radioactive Waste Management Conference & Exposition, May 1994.

41. Musukula, V. R., M.S.E. Thesis, "Dynamic Analysis of an Overhead Crane Carrying a Canister by Finite Element Method", Department of Mechanical Engineering, University of Nevada, Las Vegas, May 1993.

42. Skaggs, R., Moujaes, S., Lei, Y., V.V. Gopal, "Thermal and Metallurgical Considerations of a Novel Design for the Nuclear Waste Container", Proceeding Nuclear Waste Packaging Focus 91, ANS, ASCE publication, July 1991, pp. 153-159 (1992).

43. Trabia, Mohamed B., Kiley, M., "ASME Pressure Vessel Code Application to Nuclear Waste Container Design", Proceedings of the Third International Conference on High-Level Radioactive Waste Management, Las Vegas, NV, April 12-16, 1992, American Nuclear Society, Inc. LaGrange Park, IL, pp. 1244-1252.

44. Trabia, M., "A Continuous Force Model For Elastic-Plastic Impact of Solids", 1993 ASME Advances in Design Automation Conference, pp. 687-692, DE-Vol. 65-1.

45. Veeramachaneni, V., M.S.E. Thesis, "Analysis and Evaluation of Three Promising Nuclear Waste Disposal Option", Department of Civil and Environmental Engineering, University of Nevada, Las Vegas, May 1993.

46. Wyman, R., 1990, "Ventilation and Construction Considerations for a High Level Nuclear Waste Repository" in High-Level Radioactive Waste Management, Vol. 2, pp 1414-1417, ASCE Conference in Las Vegas, NV.

47. Zielinski, P., M.S. Thesis, "Parametric Studies on the Criticality of Radioactive Spent Fuel Canisters in a Tuff Repository", Department of Civil and Environmental Engineering, UNLV, April 1993, 125 pages.

DOE WASTE PACKAGE PROJECT
STAFF DIRECTORY

Project Office, TBE Room B120
Graduate Assistant's Office, TBE Room B107

Administration, Faculty and Staff

Samaan G. Ladkany	Director, Co-Project Investigator Professor of Civil Engineering TBE Room B-114; 895-3438/3701
William Culbreth	Associate Director, Co-Project Investigator Associate Professor of Civil Engineering TBE Room B-136; 895-3426/4153
Richard V. Wyman	Professor Emeritus of Civil Engineering TBE Room A-218; 895-3940/3701
Cynthia Shelly	Administrative Aide TBE Room B-120; 895-4328; FAX Number 895-3936

Adjunct Faculty

James Cardle	Associate Professor of Civil Engineering TBE Room B-128; 895-3941
David James	Assistant Professor of Civil Engineering TBE Room B-138; 895-1067
Samir Moujaes	Associate Professor of Mechanical Engineering TBE Room B-134; 895-3265
Robert Skaggs	Professor of Mechanical Engineering TBE Room B-112; 895-3139
Mohamed Trabia	Associate Professor of Mechanical Engineering TBE Room B-124; 895-0957
Moses Karakouzian	Associate Professor of Civil Engineering TBE Room B-132; 895-0959

Project Associates

Nadia Ladkany, M.S.C.E. Project Associate
TBE B-164

James Ventresca Ph. D Project Associate
TBE B-136; 895-3426

Graduate Assistants and Students

Rajkumar Rajagopalan (TA)
Ph.D Candidate

Paige Zelinski, M.S.
Ph.D Candidate

Akshay Bhargava

Yuping Huang

Qun Wang

Srividya Thirumalai (TA)
Ph.D Candidate

Sarath Abayaweera

Shashidhar Channarayapatna

EQUIPMENT PURCHASED, SUPPLIES,
REGISTRATION FEES, AND MISCELLANEOUS EXPENSES

January 1, 1995 to March 31, 1995

Source	**Price**
Supplies, Software & Miscellaneous Expenses	
supplies	$ 977.40
software	$ 0.00
miscellnous	$ 0.00
Total for Supplies, Software & Misc. Expenses	$ 977.40
Total for Conference Registration Fees	$ 0.00

TOTAL PURCHASES 01/01/95 to 03/31/95: $977.40

QUARTERLY PROGRESS REPORT ON THE WASTE PACKAGE PROJECT

January 1, to March 31, 1995

SUBMITTED TO THE U.S. DEPARTMENT OF ENERGY UNDER THE UNLV/DOE

COOPERATIVE AGREEMENT

BY SAMAAN G. LADKANY, PH.D., P.E.

PROFESSOR OF ENGINEERING AND PROJECT DIRECTOR

Task A.1 --- Overview and Progress of Waste Package Project and Container Design

Dr. Samaan G. Ladkany, Ph.D., P.E.

Project Director, DOE Waste Package Project

Quarterly Report

January 1, 1995 - March 31, 1995

A.1.1 Research Activities

Our Nuclear Waste Package Program received a fifth year grant for $110,000.00 under the DOE/UNLV cooperative agreement, to carry the Nuclear Waste Package Project between August 18, 1994 to June 30, 1995, at a much reduced rate of support, compared to the project funding level of $360,000.00 in the last four years. Therefore the scope and activity level of our Waste Package Project have been temporarily reduced to accommodate the cut in our fiscal year budget.

Considering that our project's research activities have spanned all the near field aspects of High Level Nuclear Waste storage in geologic formations, and that eight faculty and over 20 graduate students have been trained in this area of research, we are hoping that our project funding would be restored to its previous level by the Spring of 1995.

Our normal research activities continued in most of the research areas specified and covered under the DOE/UNLV cooperative agreement. A copy of our updated staff and student directory is enclosed in this report. Our research activities have spanned, multidisciplinary areas, which are:

a) Structural and stress analysis of the container including nonlinear yield and damage assessment and structural stability studies of the dynamic behavior of the steel multi purpose container (MPC) under normal and accidental handling conditions.

b) Nuclear fission criticality studies in the canisters.

c) Investigation of novel canister design concepts and corrosion studies.

d) Heat transfer studies of the waste canisters and in the adjacent rock drifts.

e) Fluid flow in porous media and transport phenomena of radio nuclides in the near field rock.

f) Studies of stresses and stability of the rock formations resulting from the thermal loading of the fuel elements and the multi tunnel concept being analyzed.

g) Characterization of a Faulted Rock Tunnel Model Using Photoelastic and Finite Element Studies.

h) Expirmental Investigation of a Three link Steel robot for potential remote handling of High Level Nuclear Waste

A.1.2.1 Conferences

Our project staff did not attend any conferences during this quarter.

A.1.2.2 Meetings

Drs. Ladkany, Culbreth, and Project Associate, N. K. Ladkany, Held discussions with DOE/TRW/BWFC/LLNL Staff, for the exchange of data and research ideas between the two groups. Our project research is presently considering reliability assessment of MPC's and repository tunnels under conditions that emanate from post closure and backfill conditions.

A.1.3 Purchases

Hardware, software, and laboratory equipment were purchased to support our ongoing research activities. Office supplies, software, and miscellaneous expenses totaled $977.40. A list of equipment purchases and other expenditures was enclosed earlier in this report.

A.1.4 Progress of Research

Our project research work is progressing on all fronts the specifics of the work were presented in our second quarterly report dated July 1, 1994 to September 30, 1994. Presently, our main concern is the continuation of research work to be presented in the publications presented at the High Level Nuclear Waste Management Conference, May, 1995 and by other appropriate conferences and scientific journals. Copies of these papers are incorporated in this report.

A full report with details of progress in all our research area will be included in the end-of-the-year report of our project in July 1995.

A.1.5 Conclusions

Our project staff have been very active in their professional and research activities concerning the long term storage of spent high level nuclear fuel. Our research activities will continue in all the areas covered in this report.

Task A.2.1---Nuclear Waste Container Design Considerations

Dr. William Culbreth

Qun Wang

EXPERIMENTAL INVESTIGATION OF NATURAL CONVECTION ABOUT DRIFT-EMPLACED WASTE CANISTERS

William G. Culbreth
University of Nevada
P.O. Box 454015
Las Vegas, Nevada 89154-4015
(702) 895-3426

Qun Wang
University of Nevada
P.O. Box 454015
Las Vegas, Nevada 89154-4015
(702) 895-3426

ABSTRACT

Cylindrical waste canisters placed horizontally in the underground drifts of a nuclear repository will emit decay heat by convection to the surrounding air and by radiation heat transfer. In drifts with no forced air circulation, natural convection about the waste canisters will play an important role in controlling the temperature distribution inside the canisters and on the drift wall.

Experiments were conducted to visualize the flow about model canisters and to measure the steady-state temperature distribution about the canister. The results show an enhancement in heat transfer when compared to heat flow between infinitely long eccentric horizontal cylinders. A discussion of the observed flow regimes as a function of Rayleigh number is provided to describe the various experimental results.

I. INTRODUCTION

Drift-emplaced waste canisters are under consideration for the long-term storage of spent fuel in the proposed Yucca Mountain repository. The thermal characteristics of the canister determine the temperature distribution in the spent fuel, the space immediately surrounding the canisters, and within the volcanic tuff of the repository. The repository design will need to accommodate the peak allowable temperature of the spent fuel and tuff. A detailed knowledge of the phenomenon that affect heat transfer in the vicinity of the waste canisters is required.

Key assumptions concerning the disposition of the spent fuel currently call for the permanent placement of canisters in sealed drifts with no backfill material. In this configuration, decay heat will be removed from the canisters by radiant exchange with the drift wall and by natural convection to air surrounding the canisters. Radiant heat transfer will likely dominate over natural convection for waste canisters.[1] Depending on the temperature difference between the canister and the air, natural convection can also remove a significant amount of heat.

Experiments were conducted to measure natural convection heat transfer coefficients from cylindrical canisters eccentrically located in a horizontal, cylindrical drift. These studies complemented previous work on forced convection heat transfer from waste canisters in cylindrical drifts.[2] Photographs were taken to visualize the flow. A similar geometry has been studied by Kuehn and Goldstein[3] and Guj, et al. They reported heat transfer results for circular eccentric annuli over a range of Rayleigh numbers that included laminar and turbulent flow regimes. Here, the Rayleigh number will be based on canister diameter:

$$Ra_f = \frac{g\beta(T_{canister} - T_{drift})\, d^3}{\nu\,\alpha} \tag{1}$$

II. DESCRIPTION

To measure the Nusselt number, Nu_d, for natural convection from a waste canister, an instrumented cylindrical canister was placed in a long plexiglas cylinder as shown in figure 1. A core heater was placed in the instrumented canister and guard heaters were added to two adjacent canisters. In order to measure the Nusselt number over a wide range of Rayleigh numbers, stagnant air surrounded the canister from $4.9\times10^4 < Ra_f < 1.6\times10^5$

and water was used for $1.4\times10^6 < Ra_f < 2.9\times10^7$. Type-K thermocouples were used. In air, an insulated blanket was added and the heat flow through the system was carefully monitored. In water, an isothermal water bath surrounded the drift.

In air, smoke was injected to visualize the flow. Use of a smoke wire was attempted, but buoyant currents induced by the wire obscured the natural convection patterns from the waste container model. In water, blue dye was injected with a hypodermic syringe to follow the flow induced by natural convection.

III. RESULTS

Figure 2 shows a photograph of the flow at $Ra_f = 1.06\times10^7$. In this image, the cylindrical canister was placed on the bottom of the larger cylindrical drift and dye was injected from the sides. A thin, vertical jet of dye rose to the top of the drift forming a turbulent plume in the upper one third of the cylinder. Stagnant conditions existed in the symmetric pockets near the canister.

The vertical jet dominated the flow creating a zone of heated fluid that rose to the apex of the circular drift. In our experiments, the difference in the index of refraction between the fluid in the jet and the ambient fluid was quite noticeable. This effect was noted by Keuhn and Goldstein at much lower Rayleigh numbers and will lead to higher drift wall temperatures at the apex of the drift

Figure 2
Photograph of Natural Convective Flow with Dye Injection

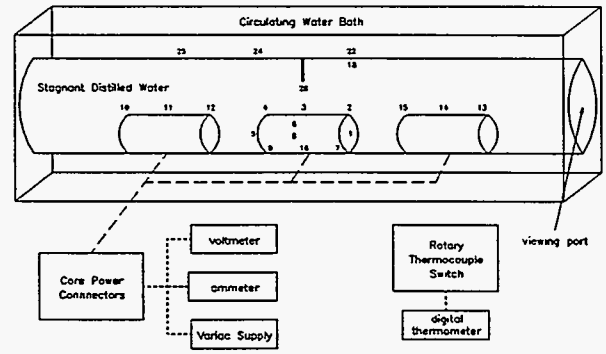

Figure 1
Experimental Setup Showing Placement of Thermocouples

than on the sidewalls. This effect may increase the compressive forces in the rock wall at the drift apex resulting in an early failure of the wall at that point.

Recirculation zones were produced in the upper half of the large cylinder. As the Rayleigh number increased, the recirculation zone receded upwards as the mixing velocity increased.

Nusselt numbers are plotted in figure 3. The experimental data demonstrated that finite, cylindrical containers have enhanced heat transfer over the case of eccentric cylinders shown as the dashed line from Kuehn and Goldstein. A curvefitted line through the new data is given by the following equation with a standard error of 1.61 for $4\times10^4 < Ra_f < 3\times10^7$:

$$Nu_f = 0.5497\ [Ra_f]^{0.2707} \tag{2}$$

In determining this expression, the ratio of the waste canister diameter to that of the drift was: $d/D = 0.25$. The spacing between the leading edges of two of the canisters was: $L/d = 5.0$, and the diameter of the model waste canister was 38.1 mm.

For the data represented in figure 3, air was used as the working fluid with $Pr = 0.7$ for all data with $Ra_f < 10^6$. For $Ra_f > 10^6$, water was used with $Pr = 4.8$.

IV. CONCLUSIONS

New experiments have demonstrated that the equations

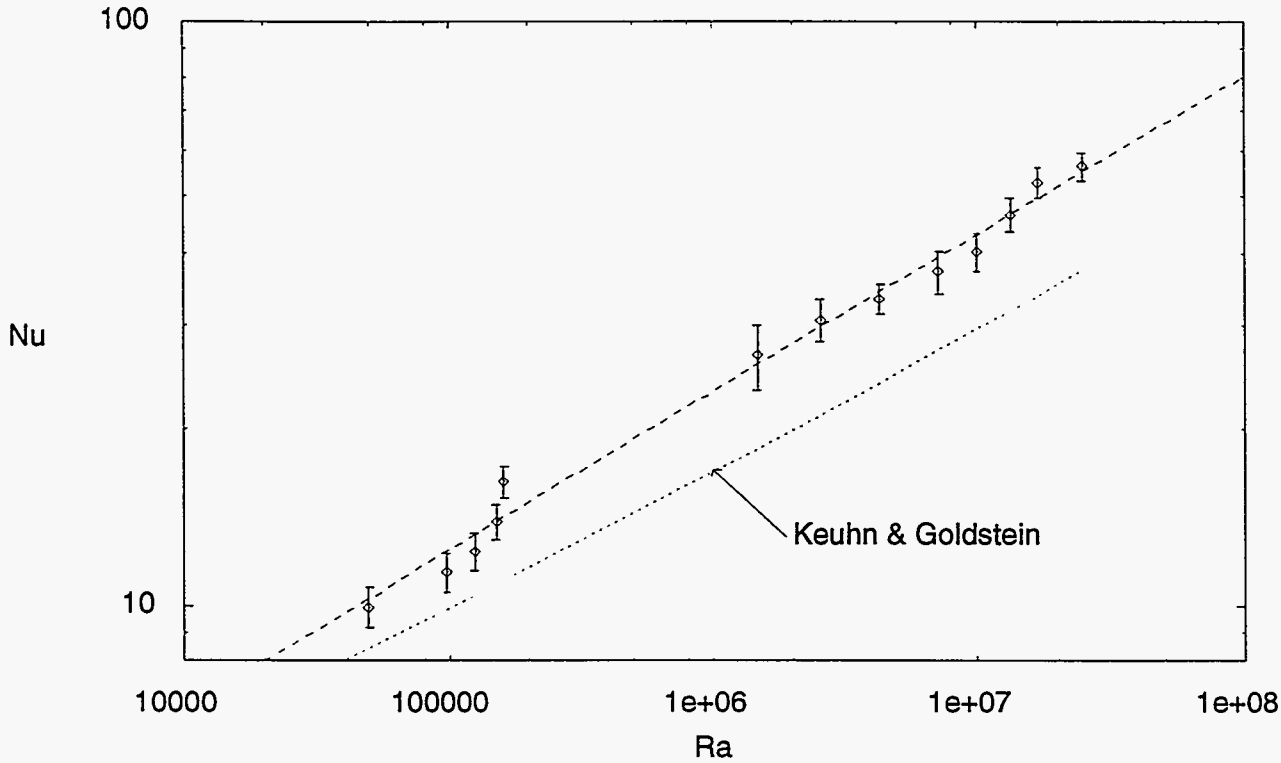

Figure 3
Measured Heat Transfer Rates

for eccentric horizontal annuli underpredict the heat transfer rates from drift-emplaced waste canisters by 17% to 31%. Visualization of the flow demonstrated that natural convection within the gap between the canisters provided this enhancement. The new empirical equation will be of value in predicting removal rates of decay heat from cylindrical waste canisters in a stagnant fluid.

Although radiation heat transfer is expected to predominate over natural convection for moderately aged spent fuel, the effect of high drift wall temperatures at the apex of the drift will need to be accounted for in the design of the repository.

NOMENCLATURE

d	diameter of the waste canister
D	drift diameter
L	length between leading edge of canisters
g	gravitational acceleration
h	average heat transfer coefficient
k	thermal conductivity of ambient fluid
Nu	Nusselt number, hd/k
Pr	Prandtl number, ν/α
Ra_f	Rayleigh number
T	temperature
α	thermal diffusivity of ambient fluid
β	coefficient of expansion
ν	kinematic viscosity of ambient fluid

ACKNOWLEDGMENTS

This research was sponsored by the U.S. Department of Energy, Yucca Mountain Project Office under cooperative agreement DOE-FC08-90NVI0872.

REFERENCES

1. W. G. Culbreth, "Computational Heat Transfer Studies of the Proposed Nuclear Waste Repository," Ninth ICMCM, Berkeley, CA (1993).
2. W. G. Culbreth and S. Pattisam, "Experimental Heat Transfer and Fluid Flow over Drift-Emplaced Canisters," Proceedings of the Fifth Annual International High-Level Radioactive Waste Management Conference, pp. 772-779 (1994).
3. Gebhart, B., Jularia, Y., Mohajan, R., and Sammakia, B., Buoyancy-Induced Flows and Transport, Hemisphere Publishing Co. (1988).

Task B.1.1---Structural Investigation of Multi Purpose Nuclear Waste Package Canister (MPC)

Dr. Samaan G. Ladkany, P.E.

Rajkumar Rajagopalan

FAILURE OF MPC OVERPACK AND INNER CONTAINER UNDER CORROSION AND MECHANICAL STRESSES IN A BACKFILLED DRIFT[1]

Samaan G. Ladkany[2],Ph.D..P.E.
Professor of Civil Engineering
Department of Civil Engineering,
University of Nevada, Las Vegas.
4505 Maryland Parkway,
Las Vegas, NV 89154
Tel:(702) 895-4328

Rajkumar Rajagopalan,
Ph.D. Candidate
Department of Civil Engineering,
University of Nevada, Las Vegas,
4505 Maryland Parkway,
Las Vegas, NV 89154
Tel:(702) 895-4328

ABSTRACT

The thickness and time at failure of the 100mm thick overpack and the 9.5mm thick inner container of a Multi purpose canister have been assessed due to loads resulting from temperature, overburden, backfill pressure and seismic loads. Critical stresses at various reduced thicknesses, resulting from pitting corrosion over the years of emplacement, have been evaluated using Finite element analysis. Both simple and continuous support conditions of the overpack have been considered in the analysis. The anticipated failure time due to corrosion of overpack and inner container is further reduced due to overburden, self and seismic loads.

1. INTRODUCTION

This research continues our previous studies[1] on the performance of the HLNW Multi purpose canister (MPC), under horizontal emplacement conditions, 114 KW/Acre heat flux and man made backfill of dense crushed Tuff material. Our aim is to determine the thickness and time at failure of the MPC overpack and inner container due to pitting corrosion and mechanical stresses resulting from the engineered backfill pressure and the weight of the HLNW fuel. Two different modes of container support during long term storage are analyzed: one in which the container is simply supported at its ends and the other in which the container is continuously supported by a rail on a flat top. Seismic loading with accelerations in the vertical and horizontal directions, equal to earth gravitational 'g' respectively (as recently observed during the Northridge Earthquake) could double the weight of the container and the passive pressure of the backfill on the container sides. Thus, the anticipated time to failure of either the overpack or the inner container may be further reduced. A case for increasing the overpack and inner container thicknesses over 100 mm and 9.5 mm respectively, is made based on the results of the stress analysis.

2. DESCRIPTION OF ACTUAL WORK

The temperature of each canister, in the near field backfill and in the rock are determined according to Mishra's model[2]. This model places various parts of the repository, thus the MPC's, in flux equivalent horizontal concentric rings at various distances from the center of the repository. Percent penetration of pitting corrosion in the overpack carbon steel and the alloy 825 inner container are obtained from Stahl's[2] corrosion versus time curves while the corresponding temperatures in the container, backfill and rock walls are obtained from Lingineni's[2] data. The inward movement of the tunnel rock walls are obtained from Kandalaft-Ladkany's[3] work, and are used in computing the overall backfill pressure[4] on the MPC.

Two possible support conditions of the overpack are considered:

1. The filled overpack is continuously supported on a track over a flat bed.
2. The filled overpack is simply supported by two pairs of front

[1]Work done under grant by U.S. Department of Energy #DE-FC08-90NV10872

[2]Director, Nuclear Waste Package Project, University of Nevada, Las Vegas

and back structural diaphragms.

The loading conditions affecting the overpack and inner container are derived from the following sources:

1. The pressure of the crushed dense gravel in the backfill due to overburden and due to thermal expansion of drift walls, backfill and the steel overpack.
2. The distributed weight of the 100 mm thick overpack.
3. Seismic loading equal to accelerations 'g' in the horizontal and the vertical directions.
4. The weight of the nuclear fuel rods in the inner container.

Seismic loading may double the passive gravel pressure and the overburden pressure when considered in the horizontal and the vertical directions respectively. It is important to note that when the overpack has corroded and failed, the inner container will remain under simply supported end conditions and will also carry the distributed weight of the HLNW. Seismic loading may also double the distributed weight of HLNW, when earthquake accelerations are considered in the vertical direction. The finite element model used in our analysis is shown in Figure 1.

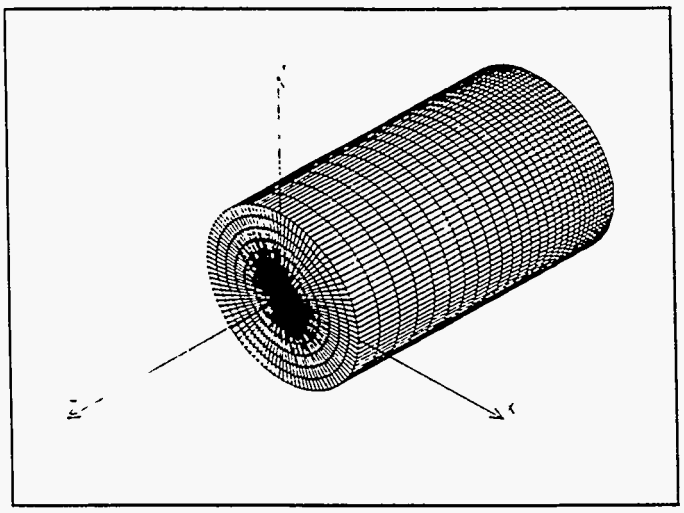

Figure 1 Finite Element Mesh Representing half model of the over pack

Stresses were determined in the overpack and later in the inner container, for MPC's, placed in Ring 1 and Ring 6 at different percent penetration of pitting corrosion. Estimates for lifetime, in years, of overpack and inner container failure due to corrosion and mechanical loading were calculated.

3. RESULTS

Table 1 shows maximum principal stresses, Von Mises stresses and corresponding wall thicknesses in the overpack at various times after emplacement. Results show that at 60 years, in Ring 1, the stresses rise to half the tensile strength (400 MPa) of steel, while at 3 to 30 years, in Ring 6, stresses rise to a third of the tensile strength of steel. When these stresses were coupled with those due to seismic accelerations of 'g', it was found that the stresses remained below the failure strength.

Table 2 shows that the overpack may fail at a thickness of 2.5 mm for simple support to 1.3 mm for continuous support in a cooled off repository, 4200 years in Ring 6 to 6200 years in Ring 1 after emplacement, when loading is due to overburden and self weight pressure only. Failure occurs earlier in the overpack at a thickness of 6.1mm and 5.9 mm, 4150 to 6150 years after emplacement, when seismic loading is considered. Stresses due to the vertical acceleration components were critical. When the overpack fails completely, the inner container is under simply supported end conditions. Failure of the inner container occurs 40 to 110 years after the failure of the overpack at thickness of 8.1 to 5.5 mm, with and without seismic loading respectively. Time predictions used Lamont's failure distributions[2].

4. CONCLUSIONS

The life span and performance of the MPC overpack and inner container in a backfilled repository has been assessed under loads resulting from temperature, seismic forces and forces due to engineered backfill, when the reduction in thickness due to pitting corrosion is considered. The Continuous support conditions of the overpack lead to a reduced thickness at failure compared to the simply supported conditions. It is observed that a 100 mm overpack and 9.5 mm inner container may fail 400 years earlier than anticipated by pitting corrosion alone. Thicker overpacks[2] of at least 200 mm and inner container thickness of 35 mm are preferable.

REFERENCES

1. S.G. Ladkany and R. Rajagopalan, "Structural Performance of a Multipurpose Canister Shell for HLNW under Normal Handling Conditions", Proceedings of the HLNW Management Conference, Las Vegas, Nevada, May (1994).

2. Total systems performance Assessment - 1993 : "An evaluation of the potential Yucca Mountain Repository", prepared for U.S. Department of Energy, Yucca Mountain Project, March (1994).

3. N. Kandalaft-Ladkany and R.V. Wyman,"Investigation of Stress in a Circular Tunnel due to Overburden and Thermal Loading of Horizontally Placed 21 PWR Multi Purpose Canisters". Proceedings of the HLNW Management Conference, Las Vegas, Nevada, May (1994).

4. Transportation Research Board," Analysis, Design and Behavior of Underground Culverts". National Research Council, Washington, D.C., (1989)

114 KW/ACRE					RING 1				
Years	over pack thickness (mm)	Applied Pressure (MPa)		Maximum Principal Stresses (MPa)				Maximum Von MisesStress (MPa)	
		From sides	From top	Simply Supported		Supported Continuously		Simply Supported	Supported Continuously
				σ1	σ2	σ1	σ2		
1	100	1.35	1.26	59.3	-71	5.786	-15.5	65.17	14.75
60	100	3.06	1.07	177.9	-208.9	55.37	-82.75	191.7	74.5
3400	90	0.11	0.08	6.58	-7.586	0.47	-1.55	7.03	1.28
3800	70	0.11	0.08	9.58	-10.86	0.51	-2.2	10.07	1.75
4300	50	0.11	0.08	14.27	-15.44	1.07	-3.93	15.17	3.11
5000	30	0.11	0.08	21.72	-23.37	2.41	-7.24	28.82	5.56
5700	10	0.11	0.08	66.48	-61.03	16.89	-29.17	104.1	29.24
114 KW/ACRE					RING 6				
1	100	1.35	1.26	59.3	-71	5.786	-15.5	65.17	14.75
3	100	2.275	1.29	120	-142.07	18	-45.17	130.3	40.75
30	100	2.02	1	111	-130.34	22.96	-45.17	120	40.6
2000	90	0.11	0.08	6.58	-7.586	0.47	-1.55	7.03	1.28
2300	70	0.11	0.08	9.58	-10.86	0.51	-2.2	10.07	1.75
2700	50	0.11	0.08	14.27	-15.44	1.07	-3.93	15.17	3.11
3200	30	0.11	0.08	21.72	-23.37	2.41	-7.24	28.82	5.56
3800	10	0.11	0.08	66.48	-61.03	16.89	-29.17	104.1	29.24

Table 1. Variation of Maximum Principal and Von Mises Stresses in MPC Overpack with time due to Self Weight and Backfill Pressure.

114 KW ACRE		Loads due to overburden and passive pressure			Seismic loading		
		Failure in years		Thickness at failure (mm)	Failure in years		Thickness at failure (mm)
		Ring 1	Ring 6		Ring 1	Ring 6	
10 cm Outer pack	Simply supported	6210	4200	2.54	6150	4130	6.1
	Supported Continuously	6230	4225	1.27	6155	4135	5.9
0.95 cm Inner Container	Simply supported	6320	4310	5.5	6190	4170	8.1

Table 2. Anticipated Time and Thickness at Failure of MPC Overpack and Inner Container.

Task B.1.2---Robotic Manipulation of HLNW Container: Expirmental Investigation of 3-link hydraulic robot for Manipulation of Nuclear Waste containers

Dr. Samaan G. Ladkany, P.E.

Dr. Mohamed Trabia

Shashidhar Channarayapatna

EXPERIMENTAL VERIFICATION OF HYDRAULIC ROBOT FOR REMOTE HANDLING OF HLNW*

Samaan G. Ladkany**, Ph.D., P.E.
Professor of Civil Engineering
University of Nevada, Las Vegas
4505 Maryland Parkway,
Las Vegas, NV 89154
Tel:(702) 895-3438/ (3936 Fax)

Shashidhar S. Channarayapatna
M.S. in Civil Engineering
University of Nevada, Las Vegas
4505 Maryland Parkway,
Las Vegas, NV 89154
Tel:(702) 895-4328/ (3936 Fax)

Mohamed B. Trabia, Ph.D.
Assoc. Prof. of Mechanical Engineering
University of Nevada, Las Vegas
4505 Maryland Parkway,
Las Vegas, NV 89154
Tel:(702) 895-0957/ (3936 Fax)

ABSTRACT

The objective of this research project is to experimentally verify the dynamic response of a 3-link hydraulic robot and to compare the results with those from an on-line prediction technique. The data were collected through strain gages and rectangular rosettes mounted on each link. Lagrange polynomials are used in a computer program which translates the strain gage readings into end effector displacements. The static and dynamic response of the end effector to loading conditions was experimentally measured and computed simultaneously. Results compared favorably with experiments. When robotic devices are used in the remote handling of High Level Nuclear Waste (HLNW), the method described above could provide immediate feedback as to the exact position and the motion of the canister handling devices.

I. INTRODUCTION

The ultimate goal of this research project is to study various techniques for the accurate remote control manipulation of robotic devices capable of handling the placement and retreiveability of HLNW in underground tunnels. We are verifying experimentally[1] the response of a flexible three-link robotic manipulator[2,3,4] and testing a novel method to measure the robot movements, which uses three pairs of strain gages and a pair of rectangular rosettes mounted on opposite sides of each link. Lagrange Polynomials are used in a computer program to translate the strain gage readings along with angular joint encoder readings into end effector displacements.

II. DESCRIPTION

In this study, static and dynamic experiments were conducted under two different loads at various angular positions of the robot links (figure 1a). The static and dynamic experiments were conducted by loading the end effector (point 4, figure 1a) with 28.8lbs and 58.8lbs and collecting the data on a 80486 AT computer, via an A-to-D board, from four sets of strain gages (figure 1b). The recorded strain values for these loads are subtracted from strain values obtained at similar positions of the unloaded robot and then multiplied by a gage factor of 10^{-5}. The strain gage readings and the angular encoder readings are used along with a formulation[4] of Lagrangian polynomials to determine, by double integration, the elastic deformations of each link. The actions of twist along the axes are determined by rectangular rosettes. In our experimental work, end effector displacement measurements were simultaneously obtained, along with strain gage and encoder data, which are automatically collected by the computer. Predicted displacements compared favorably with the experimental results.

In our experiment, the robot links were placed at a predetermined position, then made to move in-plane and out-of-plane in various angular configurations (Table 1). An 80486 AT computer is used to move the robot, while strain gage data are simultaneously acquired on a parallel 80486 AT computer. To compare the displacements measured experimentally with those predicted, a marker is attached to the center of the end effector and is made to run on a fixed chart placed at the end of the motion of the robot arm. A

*Work done under grant by U.S.Department of Energy #DE-FC08-90NV10872.

**Director-Nuclear Waste Package Project, University of Nevada, Las Vegas.

series of repeated markings on the chart describes the end effector displacements due to dynamic motion. A plot of strain versus time recorded for each set of data are shown in figures 2a & 2b, from which natural frequency ω and damping coefficient β, of the robot, for both the in-plane and out-of-plane motions, are obtained by measuring the peak coordinates and period of the damped waves. Table 1 shows excellent correlation between on-line predicted displacements and experimentally measured displacements. The measurements also show that the robot is stiffer in the vertical direction than the transverse direction, because it is a truss/frame like structure, while in the horizontal direction, the stiffness is derived from its beam action only. Damping values decrease when the load at the end effector increases. Damping is higher in value when the robot moves in its own vertical plane due to the effect of the hydraulic actuators and is lower when the robot moves horizontally in the out-of-plane direction.

III. CONCLUSIONS

The displacement equations previously developed[4] using strain gages, Lagrange polynomials and angular encoder readings, accurately represent the deformations and motion of the loaded robot. When robotic devices and hydraulic cranes are used in the remote handling and placement of HLNW canisters, the method described, using strain gages, could provide an accurate and immediate feedback as to the exact position and motion of the canister.

REFERENCES

1. Channarayapatna, S.C., "*Experimental Verification of Structural Response of a Flexible Three-Link Hydraulic Steel Robot*", Masters Research, Department of Civil Engineering, University of Nevada, Las Vegas, 1994.

2. Army Research Office, Robotics Research at University of Nevada, Las Vegas. Grant No. DAAL03-87-G-0004.

3. Ladkany, S.G. and Bannoura, T.M., "*Structural Design of a Flexible Three-Link Hydraulically Activated Robotic Arm*", Society of Manufacturing Engineers Transaction, May 7-11, 1989.

4. Ladkany, S.G. and Marceau, R.F., "*The Dynamic Response of a Flexible Three-Link Robot Using Strain Gages and Lagrange Polynomials*", Fourth World Conference on Robotics Research, Society of Manufacturing Engineers Transaction, September 17-19, 1991.

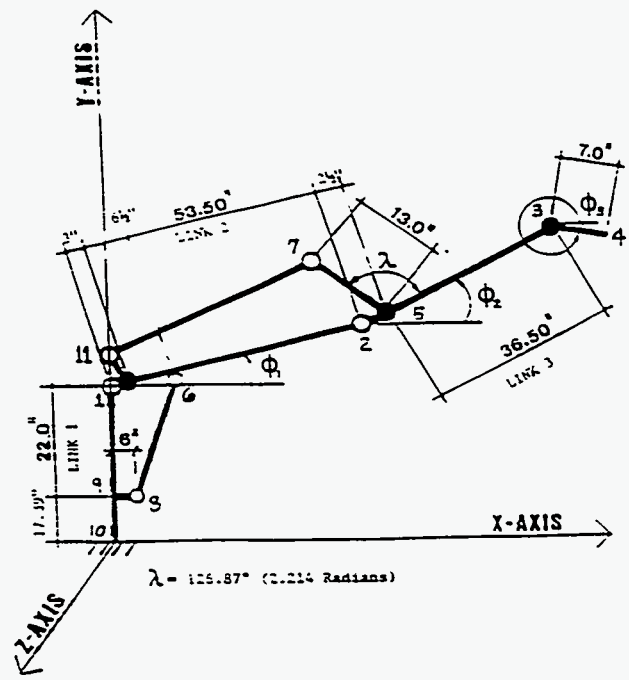

FIGURE 1a. DIMENSIONAL SCHEMATIC OF ROBOT MANIPULATOR

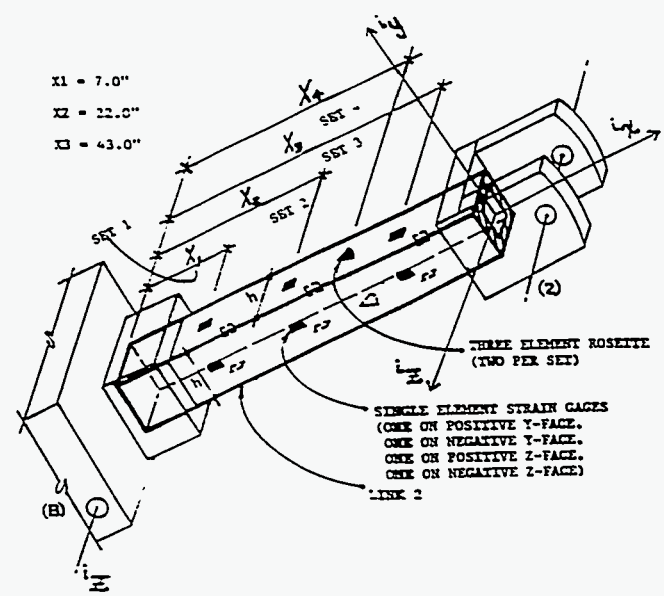

FIGURE 1b. LINK 2 STRAIN GAGE SET LOCATIONS

Table 1 Measured versus Predicted Global End Effector Dynamic Displacements of Robot in the out-of-plane direction for loads of 28.8lbs and 58.8lbs.

ϕ_1 (Rad)	ϕ_2 (Rad)	ϕ_3 (Rad)	Load 28.8lbs				Load 58.8lbs			
			^hw Computed (Inches)	^hw Measured (Inches)	Natural Frequency ω_h	Damping coefficient β_h	^hw Computed (Inches)	^hw Measured (Inches)	Natural Frequency ω_h	Damping coefficient β_h
0	0	0	-1.1386	-0.95	1.33	0.21	-1.2888	-1.15	1.07	0.11
0	4.78	4.78	-0.6642	-0.75	2.06	**	-0.7419	-0.75	1.80	**
0	5.53	5.53	-0.9391	-0.85	1.00	**	-1.1436	-1.20	0.88	0.20
0.46	0.46	0.46	-1.0169	*	1.26	0.13	-1.2460	*	1.03	0.10
0.46	5.25	5.25	-0.8647	-0.95	1.03	**	-0.9726	-1.20	0.61	**
0.46	6.00	6.00	-0.8700	-0.75	1.14	**	-1.0972	-1.30	0.80	0.21
5.82	4.32	4.32	-0.9182	-1.00	2.70	**	-0.9450	-0.90	2.50	**
5.82	5.06	5.06	-0.8017	-0.90	1.11	**	-0.9728	-0.95	0.86	0.14
5.82	5.82	5.82	-1.0100	-0.85	1.36	0.12	-1.2816	-1.20	1.03	0.09

* indicates these points were inaccessible

** indicates graphs were not clear enough to calculate the damping coefficient

ϕ_1, ϕ_2, ϕ_3 : Angle shown in figure 1a.

^hw : Flexural displacements in the direction of the local ^hz axis, transverse to the axis ^hx of the link.

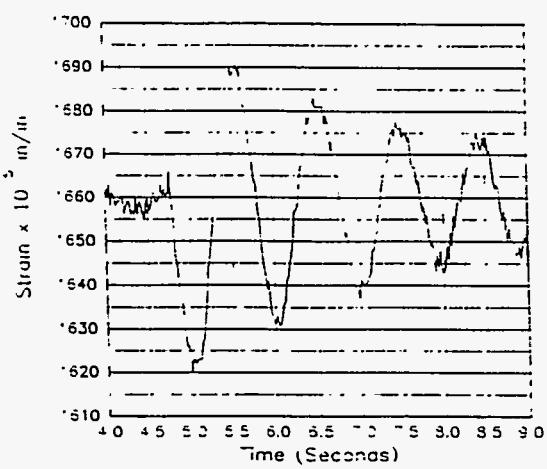

ϕ_1=0rad ϕ_2=0rad ϕ_3=0rad W=58lbs. Out-of-plane
Natural Frequency ω_h=1.07Hz. Damping Coefficient β_h=0.**
Figure2a Strain versus Time plot for Strain gage set 1 of link 2 with the robot in the lateral plane.

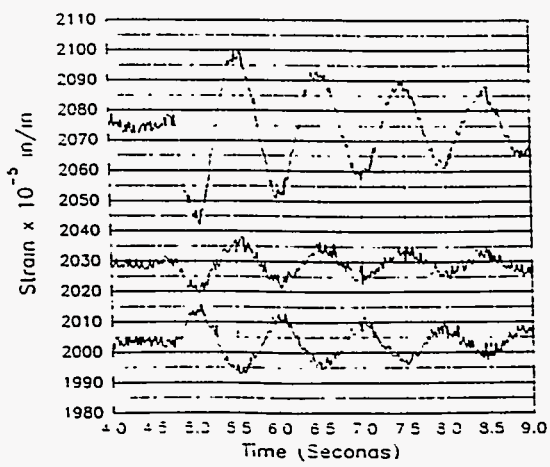

ϕ_1=0rad ϕ_2=0rad ϕ_3=0rad W=58lbs. Twisting mode
Natural Frequency ω_h=1.07Hz. Damping Coefficient β_h=0.09
Figure2b Strain versus Time plot for strain gage rosette set 4 of link 2, with the robot in twisting mode.

Design Requirements of Rock Tunnel Drift for Long Term Storage of High Level Waste

Task B.2.1---Investigation of Past Closure Stress in a Backfill Circular Tunnel Due to Overburden & Thermal Loading of Horizontally Placed 21PWR Multi-Purpose Canisters

Dr. Richard Wyman, P.E.

Nadia Kandalaft-Ladkany, MSCE

THERMAL STRESS IN BACKFILL CIRCULAR TUNNEL DUE TO 21 PWR MPC's

Nadia Kandalaft- Ladkany, MSCE
Associate, Nuclear Waste Package Project

Dr. Richard V. Wyman, PE
Professor Emeritus of Civil Engineering

Department of Civil Engineering @ University of Nevada Las Vegas; Las Vegas, Nevada, 89154
(702)895-4328 Fax (702)895-3936

ABSTRACT

Thermal and overburden stresses are predicted for 114 Kw/acre and 57 KW/acre repositories. The stresses with backfill conditions are considerably larger in intensity, being distributed over a wider zone and penetrate deeper into the rock creating an extensive potential failure zones. Stresses in the canister from backfill pressure are below yield.

I. INTRODUCTION

Our work investigates the stress and displacements in the rock tunnel walls and the pressure exerted on the canisters by the proposed engineered backfill materials due to overburden, and to the thermal loading of horizontally placed 21 PWR Multi Purpose Canisters. Modeling and stress distribution by finite element is presented in figure 2 which shows a portion of the finite element grid containing the canister, invert backfill, engineered backfill and rock tunnel walls. The finite element mesh uses triangular elements and gap elements. Gap elements accept compressive stress only, they are used to separate rock, backfill and canister surfaces from each other. The stress patterns show an overall increase in the size and stress intensity of the potential failure zone when compared with our previous results[1] for thermal stress in a drift without backfill.

II. DESCRIPTION OF ACTUAL WORK

In our analysis Young's Moduli for the TSW2 rock mass and for the crushed dense TSW2 gravel, used in the backfill are 15 GPa and 100 MPa respectively. Thermal conductivity in the TSW2 rock mass and engineered backfill were used by Lingineni[2] to obtain the temperature profiles in the MPC and its overpack, in the backfill and in the rock walls of the repository. These temperature profiles constitute the input to our finite element models. Temperature distributions in each canister and in the repository as a whole are determined according to Mishra's model[2] which places various parts of the repository with the horizontally placed MPC's in six flux-equivalent horizontal concentric rings at various distances from the center of the repository. Similarly, the percent penetration data due to pitting corrosion in the carbon steel MPC overpack, which are used in estimating the overall life of the canister, are obtained from Stahl's[2] corrosion versus time curves. Coefficients of thermal expansion for TSW2 rock mass and backfill used in our work, are obtained from the Reference Information Base[3]. They are temperature dependent, having jumps in values at several bifurcation points, which are especially high in the very near field region.

Our aim in this research has been to identify the potential failure zones in the rock tunnel walls and the pressure exerted by the backfill material on the MPC overpack due to overburden and thermal loads. The highest stresses in the drift walls occurred due to a peak temperature, 60 years after backfill, for canister placement conditions producing a thermal load of 114 KW/acre in ring 1 at the center of the repository.

Results are compared to those obtained for the same tunnel conditions, at the same points in time, for no backfill conditions[1]. Figure 2 shows the vertical and horizontal stress distributions, in the canister, backfill, and near field rock. It is clear that the stress around the tunnel crown, rib, and floor exceed 60 MPa which may lead to failure of the unconfined rock mass. The high stress zone penetrates at least a meter inside the rock walls. Table 1 shows the combined thermal and gravity stresses, with and without backfill, at various locations in the drift walls. Figure 1 shows the combined thermal and gravity stress distributions with and without backfill, along a horizontal line at the rib of the drift wall. It is clear that backfill conditions create considerably

higher stresses which are distributed over a larger and deeper zone in the rock tunnel walls. Tunnel wall displacements due to the combined thermal and overburden loads are 24 mm at the crown and 9 mm at the sides, with the walls moving toward the center of the tunnel.

Our analysis showed that the highest stresses from a 57 KW/acre load in a colder repository scenario were reached at 10 years after MPC's emplacement. This maximum stress which occurs at the crown of the tunnel, reached (-43.1) MPa under no backfill conditions and (-56) MPa with tunnel backfill. The absolute stress values are below the critical level of 60 MPa in the rock and are much lower than the stresses shown in table 1 for the 114 KW/acre of the hot repository scenario.

Should the drift design require rock bolting, corrosion data[2] for MPC's overpack may be used in the design of the prestressed bolts, which would require a detailed and separate analysis.

Results from the gap elements indicate that the backfill exerts a pressure varying from 1.2 MPa on top to 3.2 MPa on the sides of the MPC overpack which, in turn, creates a maximum stress of 83 MPa in the 100 mm thick steel cylinder, continuously supported along its length. This low stress level will not cause yield or failure in the overpack. When the effect of corrosion[2] in a cooled off repository is combined with the stresses due to the backfill pressure on the overpack, canister failure may be predicted to occur slowly within 6,000 years in ring 1 and 4,000 years in ring 6.

III. CONCLUSIONS

Under backfill conditions in the tunnel, higher temperature profiles exist for the canister and tunnel walls when compared to tunnel conditions without backfill. The critical stress zone, is higher in intensity, larger in area, and deeper into the rock . The backfill pressure on the MPC overpack, due to temperature is too low to cause any canister failure in the first thousand years of post closure.

REFERENCES

1. N. Kandalaft-Ladkany, R. V. Wyman, "Investigation of Stress in a Circular Tunnel due to Overburden and Thermal Loading of Horizontally Placed 21 PWR Multi Purpose Canisters", Proceedings of the 5th International High Level Radioactive Waste Management Conference, Las Vegas, Nevada (May 1994).

2. R. W. Andrews et al., "Total System Performance Assessment-1993: An Evaluation of the Potential Yucca Mountain Repository", U.S. Department of Energy, YMP, Las Vegas, NV, (March 1994).

3. Yucca Mountain Project, The Reference Information Base, Las Vegas, NV, (August 6th, 1990).

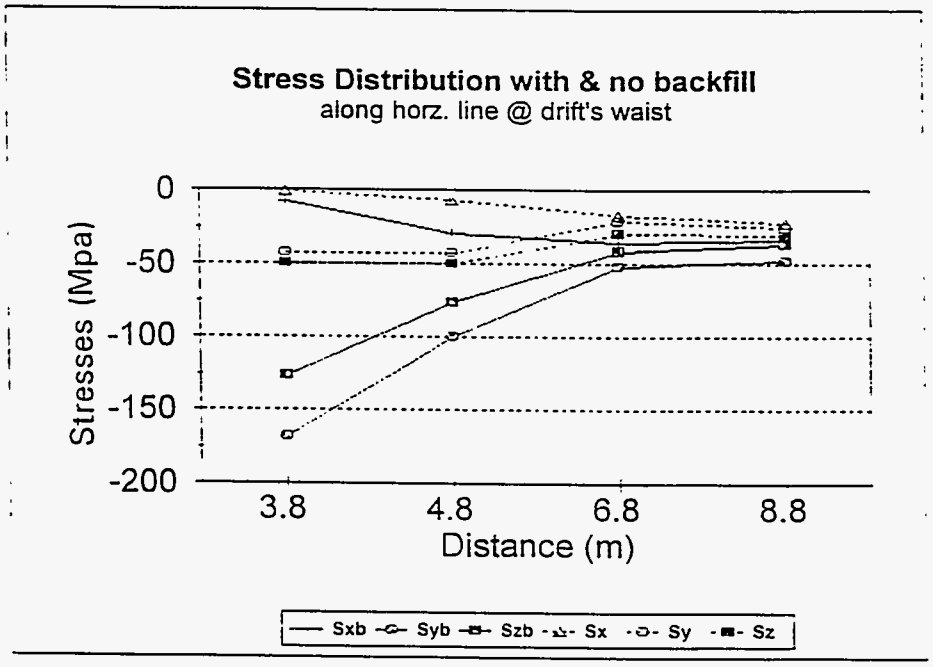

Figure 1. Thermal and Gravity Stress Distribution Along a Horizontal Line at Drift's Waist, with and without Backfill. Note : Sxb, Syb, Szb Indicate Stresses Under Backfill Conditions in Global X, Y and Z Coordinates

ROCK STRESSES IN A 7.6 M DRIFT DIAMETER @ 60 YRS. and 114 KW/ACRE						
	WITH BACKFILL			WITH NO BACKFILL		
	σx (MPa)	σy (MPa)	σz (MPa)	σx (MPa)	σy (MPa)	σz (MPa)
Crown of the tunnel (top)	-122.1	-2.51	-97.04	-94.1	-2.06	-61.21
@ 1 m in the rock (top)	-69.08	-20.53	-57.33	-72.17	-13.35	-57.31
@ 3 m in the rock (top)	-42.97	-32.75	-38.2	-33.41	-17.40	-31.52
Waist of the tunnel (side)	-7.57	-168.8	-126.15	-0.8	-43.1	-49.7
@ 1 m in the rock (side)	-29.4	-99.6	-76.82	-7.2	-42.9	-49.7
@ 3 m in the rock (side)	-35.15	-51.5	-41.22	-17.0	-21.1	-29.5
Bottom of the drift	-166.2	-194.1	-132.5	-39.06	-1.78	-25.64

Table 1. Comparison of stresses in rock drift with and without backfill.

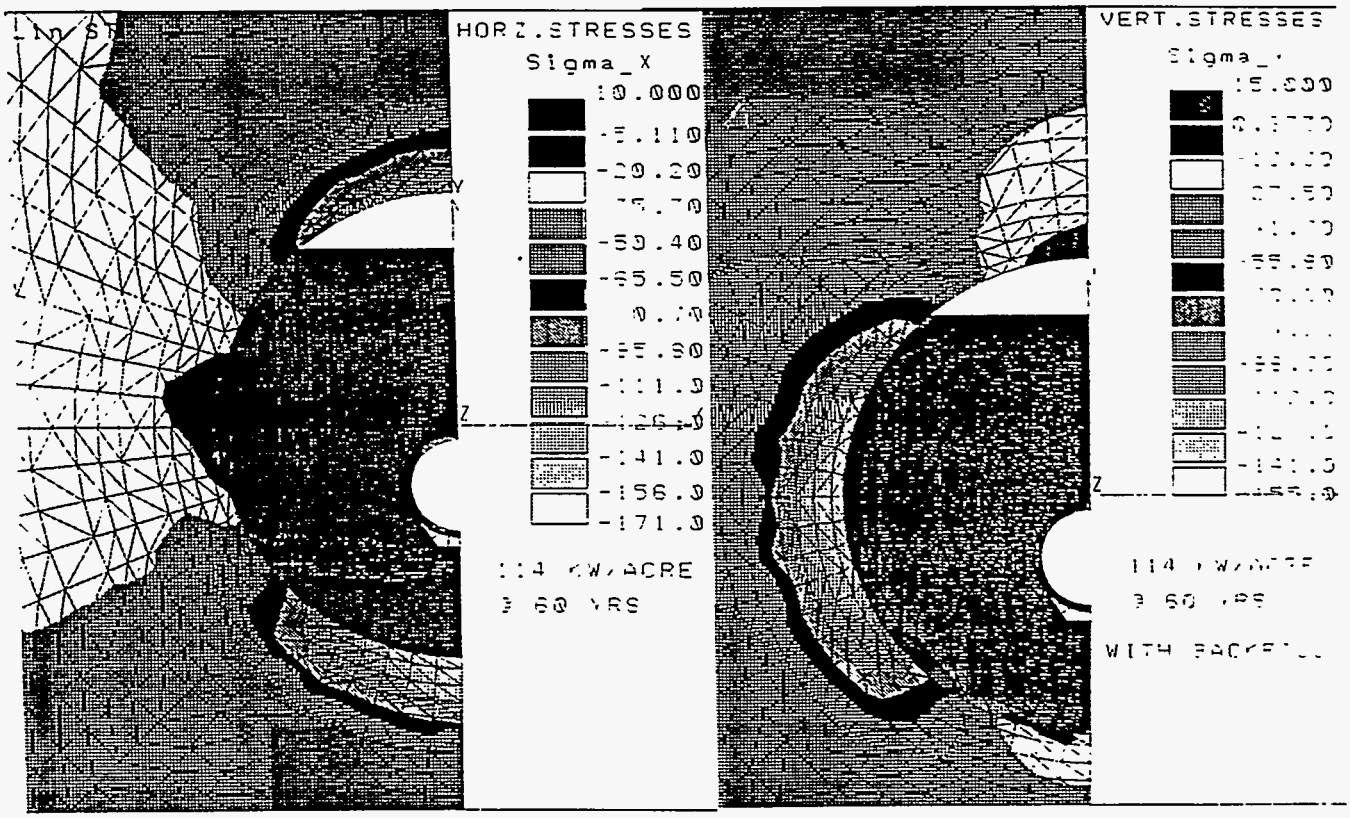

Figure 2. Thermal Stress in the Canister, Backfill and Tunnel Walls in MPa Stresses in the horizontal Direction (left) & in the Vertical Direction (right)

Task B.2.2---Investigation of Faulted Tunnel Models by Combined Photoelasticity and Finite Element Analysis

Dr. Samaan Ladkany, P.E.

Yuping Huang

STRESSES IN FAULTED TUNNEL MODELS BY PHOTOELASTICITY AND ADAPTIVE FINITE ELEMENT[1]

Samaan G. Ladkany[2], Ph.D. P.E.
Professor of Civil Engineering
Department of Civil Engineering
University of Nevada, Las Vegas
Las Vegas, NV 89154
(702)895-3438 / 3936 (Fax)

Yuping Huang
Graduate Student
Department of Civil Engineering
University of Nevada, Las Vegas
Las Vegas, NV 89154
(702)895-4328 / 3936 (Fax)

I. INTRODUCTION

Our research efforts in this area continues to investigate the development of a proper technique to analyze the stresses in the Ghost Dance fault and the effect of the fault on the stability of drifts in the proposed repository. Results from two parallel techniques are being compared to each other - Photoelastic models and Finite Element (FE) models. The Photoelastic plexiglass model (8.89 mm thick & 256.1 mm long and wide) has two adjacent square openings (57.95 mm long and wide) and a central round opening (57.95 mm diameter) placed at a clear distance approximately equal to its diameter from the square openings. The vertical loading on top of the model is 2269 N (500 lb). Saw cuts (0.5388 mm wide), representing a fault, are being propagated from the tunnels outward with stress measurements taken at predefined locations, as the saw cuts increase in length. The FE model, shown in Figure 1, duplicates exactly the Photoelastic models. The adaptive mesh generation method is used to refine the FE grid at every step of the analysis. This nonlinear iterative computational technique uses various percent tolerance errors in the convergence of stress values as a measure in ending the iterative process.

II. DESCRIPTION OF ACTUAL WORK

In our previous work[1], the stress values predicted by the FE at the tip of the cut were about half the measured values from Photoelasticity. We concluded that our element mesh size at the fault tip (saw cut) region was not adequate, thus necessitating the use of the iterative Adaptive method, which we are presenting.
Figure 2 a,b,c, show the Adaptive FE mesh for a region at the tip of the fault, in an Adaptive H-method having convergence tolerance error schemes of 4%, 10%, and 20%. Figure 2 d,e, show flat and rounded shapes at the tip of the fault, used in calculating of the stress concentration factors.

III. RESULTS

Figure 1 shows the distribution of the vertical stresses in the model. Stress concentrations around the corners of the square tunnel and the two fault regions are clear. Identical patterns were observed from Photoelastic measurements. The fillets at the square tunnel corner are quadrant circles having radii of 2 mm, which were duplicated in the FE model. The principal stress results, P, from FE and Photoelasticity and the stress concentration factor, K, were in reasonably close agreement. The radius and actual shape of the saw cut tip were not measurable exactly. In our FE models, P and K were calculated for various tip shapes and tolerance errors. Table 1 shows P and K at the tip of the fault and at the corner point of the square tunnel, due to the applied vertical load. As the H-method tends to refine the mesh, the sizes of elements become quite smaller than the size of the saw cut. P and K slowly increase with the decrease in the tolerance, thus the element size, and become somewhat insensitive to the flatness or roundness of the fault tip in the model. The 20% tolerance FE scheme gives results similar to those obtained from Photoelasticity, considering that the exact fringe order at the sawcut tip is difficult to measure even with a telemicroscope.

IV. CONCLUSIONS

Stress concentration factors measured by Photoelasticity and Adaptive FE may be as high as 21 when stresses in a fault are compared to background stresses obtained without fault. The width and real shape of the fault at the tip dictate the tolerance error used in an FE model.

---

[1]Work done under grant by U.S. Department of Energy #DE-FC08-90NV10872.

[2]Director and Co-PI; Nuclear Waste Package Project, University of Nevada, Las Vegas.

REFERENCES

1. Samaan G. Ladkany, Yuping Huang, "Investigation of faulted Tunnel Model by Combined Photoelasticity and Finite Element Analysis". *High Level Radioactive Waste Management, Proceedings of the 5th International Conference*, Las Vegas, NV, May, 1994.

2. M. Lashkari, *Cosmos/M User Guide*, Volume II, Release 1.71, Structural Research and Analysis Corp., CA, 1994.

3. *060 Series Transmission Polariscope Instruction Manual*, Measurements Group, Inc., Photoelastic Division, Raleigh, NC, 1984.

4. S. A. Meguid and S. X. Gong, "Stress Concentration Around Interacting circular Holes: A Comparison Between Theory and Experiments", *Journal of Engineering Fracture Mechanics*, Vol. 44, No. 2, PP. 247-256, 1993.

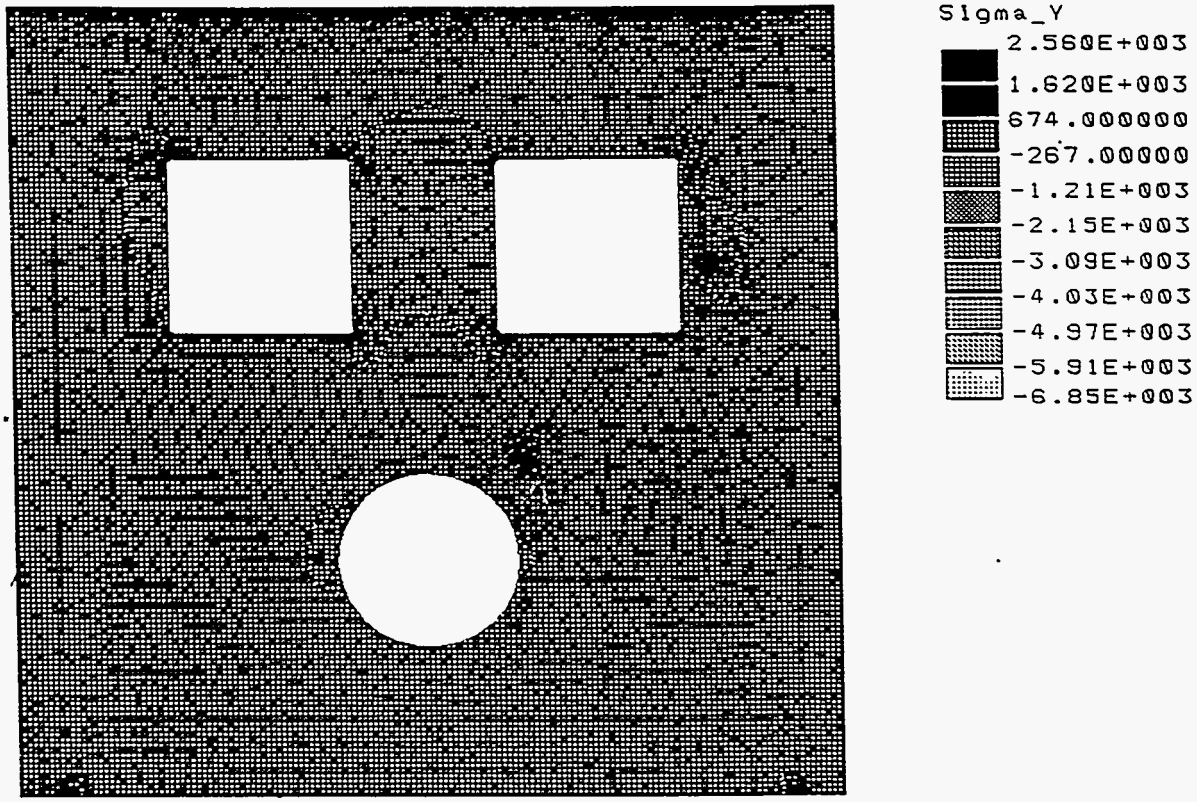

Figure 1. Model of Two Square and One Adjacent Circular Tunnel with Partially Extended Faults Showing Vertical Stress Distribution.

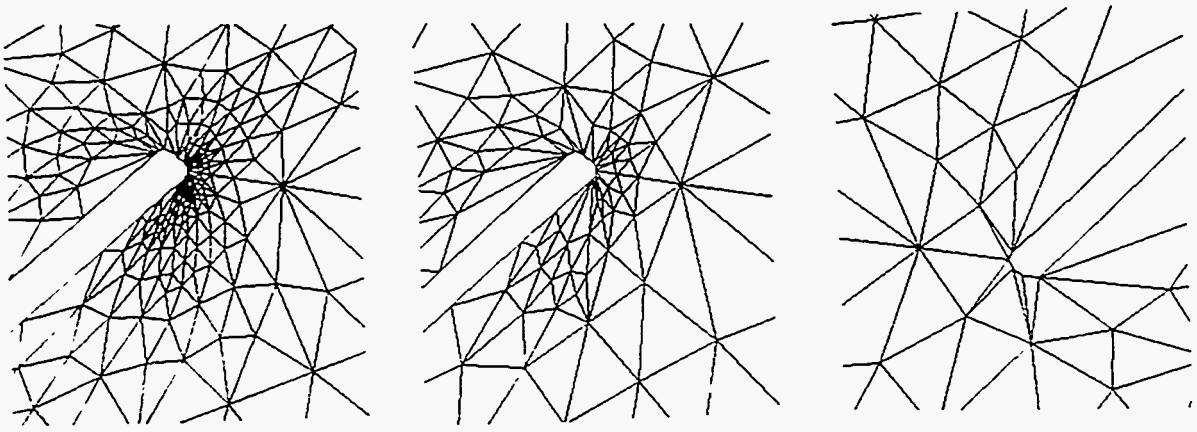

a) 4% Tolerance Error b) 10% Tolerance Error c) 20% Tolerance Error

Figure 2. Adaptive Mesh Around the Lower Fault Region at Various Tolerance Errors and Showing Flat and Rounded Faulted Tips.

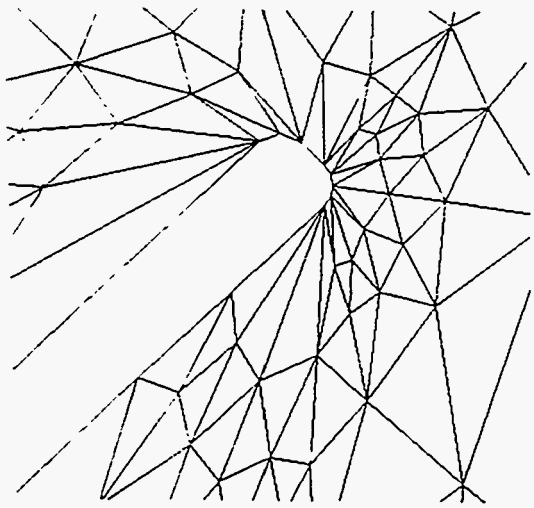

d) Flat Fault Tip

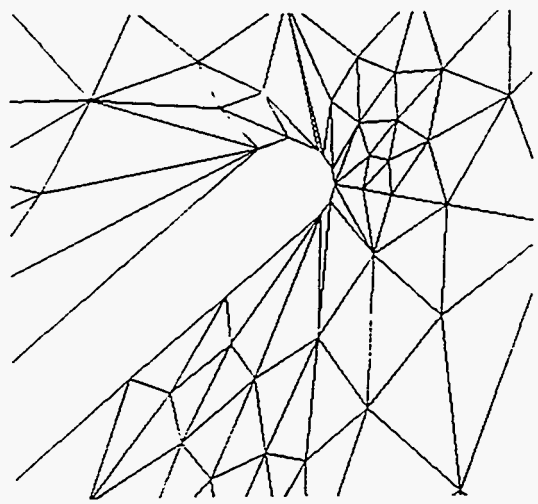

e) Round Fault Tip

Figure 2. Adaptive Mesh Around the Lower Fault Region at Various Tolerance Errors and Showing Flat and Rounded Faulted Tips.

FINITE ELEMENT ANALYSIS, ADAPTIVE H METHOD									PHOTOELASTIC MEASUREMENTS	
			4% Tolerance Error		10% Tolerance Error		20% Tolerance Error			
			P(MPa)	K	P(MPa)	K	P(MPa)	K	P(MPa)	K
Tip Point of Fault	Flat Top Model	Upper Point	9.03	13.8	6.99	10.7	5.22	8.00	Upper Point	
									11.7	17.9
		Lower Point	-29.9	20.9	-25.8	18.1	-17.5	12.3	Lower Point	
									-12.6	8.80
	Rounded Top Model	Upper Point	9.00	13.8	6.97	10.7	5.25	8.04	Background Principal Stresses: P1=0.653 P2=-1.43	
		Lower Point	-28.4	19.9	-23.0	16.1	-16.3	11.4		
Corner Point of Rectangular Tunnel			-8.76	2.72	-8.35	2.59	-7.17	2.23	-8.37	2.60
									Background Principal Stresses: P1=0.0, P2=-3.22	

Table 1. Principal Stresses, P, and Stress Concentration Factors, K, at the Tip of a Fault and at a Corner Point in a Faulted Tunnel Model. Upper and Lower Points Refer to the Top & Bottom Fillets at the Tip of the Cut.