DOE/BC/14986--8

TOPICAL REPORT No. 1

CO_2 HUFF-n-PUFF PROCESS IN A LIGHT OIL SHALLOW SHELF CARBONATE RESERVOIR

(No. DE-FC22-94BC14986)

Texaco Exploration & Production Inc.
Midland, TX

Date of Report:	10-01-95
Award Date:	02-10-94
Anticipated Completion Date:	12-31-97
DOE Obligation/Award (Reporting Period):	$508,868.00
Program Manager:	Scott C. Wehner
Principal Investigator(s):	Roger Cole John Prieditis Joe Vogt Scott Wehner
Contracting Officer's Representative (COR):	Jerry Castoel / BPO
Reporting Period:	Budget Period No. 1

General Information

Field Name: Vacuum

Reservoir Name: Vacuum Grayburg San Andres

State: New Mexico

County: Lea

Formation(s): Grayburg Fm. & San Andres Fm.

RRC District (If Texas): n/a

Field discovery date: June, 1929

Current Operator: Texaco Exploration and Production Inc.

Current working interest ownership (names & percentages for all those > 10%):

Texaco	44.9 %
Marathon	25.6
Shell	15.0
Phillips	7.6
Others (13)	6.9
	100.0 %

Project description (approximately 500 - 1000 words from public abstract):

The principal objective of the Central Vacuum Unit (CVU) CO_2 Huff-n-Puff (H-n-P) project is to determine the feasibility and practicality of the technology in a waterflooded shallow shelf carbonate environment. The results of parametric simulation of the CO_2 H-n-P process coupled with the CVU reservoir characterization components will determine if this process is technically and economic for field implementation. The ultimate goal will be to develop guidelines based on commonly available data that other operators in the industry can use to investigate the applicability of the process within other fields. The technology transfer objective of the project is to disseminate the knowledge gained through an innovative plan in support of the Department of Energy's (DOE) objective of increasing domestic oil production and deferring the abandonment of shallow shelf carbonate (SSC) reservoirs. Tasks associated with this objective are carried out in what is a timely effort for near-term goals.

PURPOSE:

The goal of this Central Vacuum Unit Project is to demonstrate the CO_2 Huff-n-Puff process in a waterflooded, light oil, shallow shelf carbonate reservoir within the Permian Basin. The CO_2 Huff-n-Puff process is a proven enhanced oil recovery technology for Louisiana-Texas gulf coast sandstone reservoirs. The reader is referred to three Society of Petroleum Engineer (SPE) papers, No. 15502, No. 16720 & No. 20208 for a review of the theory, mechanics of the process, and several case histories. The process has even been shown to be moderately effective in conjunction with steam on heavy California crude oils. Although the technology is proven in gulf coast sandstones, it continues to be a very underutilized enhanced recovery option for carbonates.

BENEFITS

The application of CO_2 technologies in Permian Basin carbonates will do for the decade of the 1990's and beyond, what waterflooding did for this region beginning in the 1950's. With an infrastructure for CO_2 deliveries already in place, a successful demonstration of the CO_2 Huff-n-Puff process will have wide application. Profitability of marginal properties will be maintained until such time as pricing justifies a full-scale CO_2 miscible project. It could maximize recoveries from smaller isolated leases which could never economically support a miscible CO_2 project. The process, when applied during the installation of a full-scale CO_2 miscible project could mitigate up-front negative cash-flows, possibly to the point of allowing a project to be self-funding and increase horizontal sweep efficiency at the same time. Since most full-scale CO_2 miscible projects are focused on the "sweet spots" of a property, the CO_2 Huff-n-Puff process could concurrently maximize recoveries from non-targeted acreage. An added incentive for the early application of the CO_2 Huff-n-Puff process is that it could provide an early measure of CO_2 injectivity of future full-scale CO_2 miscible projects and improve real-time recovery estimates--reducing economic risk. The CO_2 Huff-n-Puff process could bridge the near-term needs of maintaining this large domestic resource base until the mid-term economic conditions support the implementation of the more efficient full-scale miscible CO_2 projects.

GENERAL APPROACH & TECHNOLOGY TO BE USED:

The goal of this technology demonstration is to gain an overall understanding of the reservoir qualities that influence CO_2 Huff-n-Puff production responses within a heterogeneous reservoir such as the shallow shelf carbonate environment of the Central Vacuum Unit. A generalized reservoir model will be developed and used to determine the importance of various geological and operational influences upon the CO_2 Huff-n-Puff process. Once the macro reservoir characterization is available, eight producing wells with varying reservoir parameters will be selected for the field demonstration project. One of these locations will be selected for detailed reservoir characterization. This detailed geologic model will be used for numerical compositional simulation to finalize the specific design parameters of the field demonstrations, and continued history matching and refinements to the project.

The reservoir characterization and numerical simulation will define the specific volumes of CO_2 required and expected oil recoveries for each of the demonstration sites. The typical process cycle will involve the injection of an estimated 1400 tons CO_2 in each producing well. The CO_2 will be injected in an immiscible condition, displacing the majority of the water within the wellbore vicinity, while bypassing the oil-in-place. The CO_2 will be absorbed into both the oil and remaining water. The water will absorb CO_2 quickly, but only a relatively limited quantity. Conversely, the oil can absorb a significant volume of CO_2, although it is a much slower process. For this reason the producing well will be shut-in for what is termed a soak period. This soak period normally lasts 1-4 weeks depending upon fluid and reservoir properties. The pressure in the near-wellbore vicinity will continue to increase to near minimum miscibility conditions during the soak. During this soak period the oil will experience significant swelling, viscosity and interfacial tensions will be reduced, and the relative mobility of the oil will increase. The no-flow pressure boundary of the waterflood pattern will serve to confine the CO_2, reducing leak-off concerns. When the well is returned to production the mobilized oil will be swept to the wellbore by the waterflood. Incremental production is expected to return to its base level within 6-7 months. As shown in SPE papers No. 15497 & No. 20268 with actual field data, diminishing returns are expected with each successive cycle, thus this proposal is to expose each of the producers to no more than one cycle of the CO_2 Huff-n-Puff process.

ANTICIPATED RESULTS:

It is anticipated that this project will show that the application of the CO_2 Huff-n-Puff process in shallow shelf carbonates can be economically implemented to recover appreciable volumes of light oil. The goals of the project are the development of guidelines for cost-effective selection of candidate reservoirs and wells, and estimating recovery potential.

By applying the CO_2 Huff-n-Puff process in the near-term, it is expected that the hydrocarbon resource base within the shallow shelf carbonate class of reservoirs can be extended to the mid-term timeframe where economic conditions would justify full-scale miscible CO_2 development.

OTHER RELEVANT INFORMATION:

The Grayburg/San Andres formations produce a 38.0° API oil from an average depth of 4550' within the Central Vacuum Unit. Total oil column reaches as much as 600'. Porosity and permeability in the gross pay interval can reach a maximum of 23.7%, and 530 md, respectively. The porosity and permeability over the gross pay interval averages 6.9% and 10.0 md, respectively. The net pay interval averages will be determined during the reservoir characterization phase of the project. Although the residual oil saturation to waterflooding within the near wellbore vicinity has not yet been determined in detail, carbonate reservoirs typically leave behind a high residual oil saturation in the range of 30-35% in the waterflood swept zones. Oil saturations in other unswept zones, in the heterogeneous reservoir approach initial conditions. This is a significant volume of uncontacted and immobile oil which is the target of this CO_2 Huff-n-Puff process.

Project Team Members:

Scott C. Wehner (Program Manager)
Vic Smith
Roger Cole
Bob Brugman
John Prieditis
Joe Vogt

Technical contacts (name, affiliation, phone, address):

Scott C. Wehner
%, Texaco Exploration and Production Inc.
P.O. Box 3109
Midland, TX 79702
(915) 688 - 2954

Primary Drive Mechanism:

Gas Expansion

Estimated primary recovery factor (%):

22.4 % OOIP (assumed equal to half Ultimate Primary + Secondary since still producing at State allowables upon initiation of waterflood operations. Material balance no performed in this study.

Estimated incremental Secondary Recovery Factor (%):

22.4 % OOIP (see comment above concerning primary recovery efficiency)

Estimated Total of Primary and Secondary Recovery Factor (%):

44.8 % OOIP

Date of First Production:

December 1937 for the base leases that comprise what is now known as the Central Vacuum Unit.

Number of Wells drilled in Field (all time):

Estimate approximately 2,000 in all Fm's/Reservoirs within Vacuum Fd. There are 190 completions within the CVU unitized formations (Grayburg & San Andres).

Well Patterns (5-spot, 9-spot, line drive, etc.):

Central Vacuum Unit contains mostly 5-spot injection patterns. Infill development on 10-A spacing has resulted in direct line drive in some vicinities. Offsetting property is developed on 9-spot patterns & line drive, with limited 5-spot patterns. Another offset property was originally developed on 9-spot, but subsequently converted to 5-spot following infill development.

Number of Wells penetrating reservoir:

It is estimated that of the approximately 2,000 wellbore existing in the Vacuum field, about 1,200 were completed within the subject formations. However, since the Grayburg and San Andres Fm's are the shallowest of at least 12 known producing formations/reservoirs, all 2,000 penetrate the subject formations.

Total completions to date in field:

Estimate approximately 2,000 completions in the Vacuum Fd. Only 1,200 in G'burg/San Andres Fm's.

Total completions, each reservoir:

Irrelevant and not readily available. However, there have been 190 completions within the CVU unitized formations (Grayburg & San Andres).

Total current producers, each reservoir:

Unknown (see comment above). However, there are 84 active producers completed within the CVU unitized formations (Grayburg & San Andres).

Total current injectors, each reservoir:

Unknown (see comment above). However, there are 83 active injectors completed within the CVU unitized formations (Grayburg & San Andres).

Number of flowing wells:

None known. None at Central Vacuum Unit. However, the CO_2 operations immediately east of CVU likely has flowing wells depending on gas-liquid ratios associated with their WAG operations.

Summary field history (approximately 500 words):

The Vacuum Field was discovered in May, 1929 by the Socony Vacuum Oil Company—now known as Mobil. The discovery well was the New Mexico "Bridges" State Well No. 1 (drilled on the section line of Sec's 13 & 14, T16S R34E). The well was shut-in until 1937 when pipeline facilities became available to the area. Field development began in late 1937 and by 1941, 327 wells had been completed on 40-acre spacings. By year 1947, the field had been extended approximately two miles to the west. Scattered reservoir development continued slowly over the next two decades. There was not much emphasis directed at the Vacuum Field properties since the majority were producing at state "allowable." Because the wells situated most favorably were expected to continue at "allowable" the peripheral properties would become the first targets of attention. The first enhanced recovery attempt in the Vacuum Field was a pilot waterflood by Socony Vacuum (Mobil) which began December

1958. Enhanced recovery on the Texaco leases began with the unitization of the West Vacuum Unit (WVU) with waterflooding beginning in 1966. In 1972-73 a second stage of reservoir development began with the unitization of the Vacuum Grayburg-San Andres Unit (VGSAU) and infill drilling which reduced the well spacing to 20-acre. The VGSAU waterflood was initiated in 1973. ARCO initiated their State Vacuum Unit in 1977. The Central Vacuum Unit (CVU) became official in 1977 with water injection beginning in 1978. The CVU was infill drilled on 20-acre spacings during the period 1978-1982. Phillip's East Vacuum Grayburg-San Andres Unit began in 1978 along with a co-op flood in Section 35. A polymer augmented waterflood was incorporated and completed during the 1980's on both the VGSAU & CVU. Other operators in the Vacuum field also implemented Polymer floods due to incentives available to reduce the Windfall Profits Taxation burdens. Further reservoir development began in 1987 with infill drilling on 10-acre spacings at the CVU. Infill drilling continues sporadically. Enhanced recovery operations by waterflooding are in progress across the entire Vacuum field, and Carbon Dioxide Miscible Flooding (CO_2) was initiated by Phillips in the southeastern portion of the field in 1985. In addition to the San Andres/Grayburg producing horizons, there are 12 other formations that are, or have been productive in the Vacuum field. These, mostly deeper horizons were developed predominantly during the 1960's.

Project Locations:

Approximately 20 miles West of Hobbs, in Lea Co., New Mexico (35 miles by road).

3-D Description of Reservoir

AERIAL & VERTICAL DESCRIPTION....

Aerial Extent:

Approximately 35 Square miles. About 10 mi. in East - West direction & about 7 mi. in N - S Direction.

Porosity mean, distribution and map:

The Vacuum Core database was used extensively to analyze porosity relationships. The entire Vacuum Core database is included in digital format (Bernoulli No. 1, CORE Subdirectory, Excel format) for review and analysis. Enclosed with this report is also hardcopy output of several porosity relationships derived from the above database (Vacuum Core Database Hardcopy Info.). A map of porosity distribution is enclosed in a map pocket to this report.

Original saturation mean, distribution and map:

Oil: $1 - S_{wi}$

Water: The average water saturation at discovery for the gross pay column, above -735 ft (subsea) has been estimated to be 51.6%. By electric log analysis and capillary pressure observations, the net pay zones typically averaged 19-20% over the same gross intervals. A map of this initial water saturation distribution is included in the map pocket of this report.

Gas: No gas cap was present at discovery.

Saturation distribution map at the inception of cost-share project:

A map of the current (01-01-95) estimate of water saturation is included in the map pocket to this report.

Permeability mean, distribution and map:

The Vacuum Core database was used extensively to analyze permeability relationships. The entire Vacuum Core database is included in digital format for review and analysis (Bernoulli No. 1, CORE Subdirectory, Excel format). Enclosed with this report is also hardcopy output of permeability relationships (V_{dp}, Dykstra Parsons coefficient) derived from the above database. A map of permeability distribution is enclosed in a map pocket to this report.

Directional permeability (k_y/k_x):

Two oriented cores exist within the project study vicinity (same formation). The VGSAU No. 140 & 157 do no indicate any direction preference. The N/S data plots on top of the E/W data with few exceptions, which are likely due to the particular piece of material being studied.

Pay continuity as a function of well spacing:

No studies have been performed. Macro Zonation carries across the field fairly well. Well-to-Well continuity of individual producing strata are more difficult even down to the 10-acre spacing.

Reservoir dip (angle and direction):

Various. Depends on position within Field/Unit. See structural map included in map pocket to this report.

Location and extent of faults or other flow barriers (if applicable):

It is currently felt that the Sandstones act as major flow barriers within the reservoir on a macro-scale. Anhydrite content within carbonate zones directly effects transmissibility on a micro-scale.

Location and extent of salt domes (if applicable):

Not applicable.

Measure of cross flow among reservoir layers:

Although injection profiles/surveys exist over most of the study vicinity, no known study has been performed. It is noted that after wells are shut-in, there is a cross flow within the wellbore. This normally occurs as fluids enter from the deeper San Andres and exit within the shallower Grayburg intervals.

Average net pay thickness, distribution and map:

The average net pay thickness within the CVU study area is 100 ft. A map of the net pay (by zone) is included in the map pocket to this report.

Average gross pay thickness, distribution and map:

The average gross pay thickness within the CVU study area is 402 ft. A map of the gross pay (by zone) is included in the map pocket to this report.

Number of reservoir layers:

Macro zonation within the study area identifies the following layering.

Grayburg Dolomite	
Grayburg Sandstone	
Upper San Andres	
San Andres Sandstone No. 1	(very limited extent)
San Andres Sandstone No. 2	(very limited extent)
Lovington Sandstone	(where present)
Lower San Andres	

Vertical permeability profile(s):

Two wells have vertical permeability measurements from core analysis. VGSAU No. 140 and No. 157 indicate an overall .30 and .27 to one ratio of vertical to horizontal permeability, respectively. These calculations exclude the Grayburg Ss and Lovington Ss members which tend to increase these ratios, however the sandstones are non-pay due to their low permeability. The effective vertical permeability over any appreciable distance is considered to be negligible, and that the figures above decrease substantially, and effectively to zero between the many zonations within the two subject carbonate formations.

Vertical porosity profile(s):

All porosity logs from the study area have been included in digital format (Bernoulli No. 1: GES\vacproj\vaclas2 in LAS format, & Bernoulli No. 2: ACCESS\).

If gas cap is present . . .

Gas/Oil contact:	No gas cap was present at discovery. No free gas exists currently.
Gas cap bulk volume:	No gas cap was present at discovery. No free gas exists currently.
Gas-in-place:	No gas cap was present at discovery. No free gas exists currently.

If aquifer is present . . .

Initial oil-water contact: A study of electrical wireline data suggests that the zero capillary pressure point (100% H_2O) is in the vicinity of -1,000 ft (subsea). A transition zone exists.

Current oil-water contact: Given the above statement, the current oil-water contact has been defined as the depth at which the average water saturation is less than or equal to 37.5%. This corresponds to a 50.0% fractional water flow point. This depth is found on average to be at -750 ft (subsea).

Aquifer size: The pay zones within the study area, and the Vacuum field in general are not in communication with the aquifer. Water production was very limited prior to initiating waterflooding operations within the field. With few exceptions, the only water production of any measure was around the periphery of the field--and this volume was limited.

Water influx rate: No vertical influence is noted, or expected given the limited vertical permeability. Any water must encroach up from the off-structure locations around the periphery. Higher permeability strata which dips below the pseudo-OWC discussed above, probably could expect to see water produced.

GEOLOGIC CHARACTERISTICS

Lithology: The Guadalupian San Andres reservoir zone is lithologically complex. Descriptions are based on megascopic and microscopic analysis including X-Ray Diffraction and SEM/EDS. The following is a summary of those findings. Supporting data is supplied in the form of core descriptions (hardcopy, by well -- 13 individual packets).

The Grayburg /San Andres is composed of cyclical evaporites and carbonates reflecting many eustatic sea level fluctuations. The rock record consists of dolomite in the form of finely crystalline dolomudstones, dolowackestones, and dolograinstones. Quartz sandstones, siltstones and minor amounts of shales are also found. Anhydrite is prevalent throughout the section. Several low porosity/low permeability intervals are comprised entirely of anhydrite, both bedded and the familiar "chicken-wire" forms are present.

Paleostructural control of the distribution of lithology types can be demonstrated. In general, both shale and anhydrite content increase shoreward (north). Where present, sandstones are cleaner and thicker on the structural highs. Dolograinstones along the shelf margin grade to dolomudstones both north (shallower water facies) and south (deeper water facies).

Five major lithologies are represented in the Grayburg/San Andres within the study area: 1) Ooid Dolograinstone; 2) Fossiliferous Dolopackstone; 3) Quartz Sandstone; and 5) Anhydrite. Each lithology will be discussed separately.

Ooid Dolograinstone

These porous tan ooid dolograinstones are present predominantly along the shelf break into the basin. Anhydrite volume within the grainstone varies from 2 to 10%, mainly filling voids from dissolution of fossil fragments. Thinly bedded dolomudstones and peloidal dolopackstones commonly interfinger with the ooid grainstones off the structural high.

Quartz Sandstone

This lithology is comprised of thin, interbedded argillaceous, very fine grained quartz sandstone and associated sandy dolomudstones. These are often interbedded with thin green to gray shales. Horizontal bedding structures may be locally present. This rock generally exhibits sheet geometries, possibly from reworking of earlier sediments. Sandstones and sandy dolomudstones comprises the majority of the Lovington and Grayburg Sandstone intervals. Three distinct sandstone bodies have also been identified within the Upper San Andres

The sandstone bodies within the Upper San Andres are often stacked and are completely enclosed by dolostones. The sands occur seaward of the Lovington pinch-out and are stratigraphically younger. Where present, the sands add to the overall thickness of the San Andres and accent the structural relief. They are represented by core in one well, VGSAU No. 34. In this well, they occur as a sandy dolomudstone with very fine quartz sand grains. It is characterized by moderate amounts of anhydrite, comprising up to 8% of the total rock volume. Logs indicate that the sandy dolomudstones may clean-up into true quartz sands in nearby wells where the interval is better developed.

The Lovington Sandstone is a regional marker which can be readily distinguished on electric logs. At Vacuum Field, the Lovington is a buff gray dolomitic sandstone with abundant shale laminations. Sand grains are composed of very fine angular quartz. The upper portion of the sandstone gradually grades into a sandy dolomudstone. In the northern portions of the study area, the Lovington may also exhibit the presence of a dark gray silty shale. The shales are interbeded with sandy/silty dolomudstones with abundant burrowing and algal laminations. This zone pinches-out seaward, not being present on the highest portions of the structure.

Fossiliferous Dolopackstones and Dolograinstones

This lithology makes up the bulk of the reservoir quality rock within the San Andres/ Grayburg interval. The dolograinstones commonly have bivalve, fusilinide, and gastropod fossils. Peloids comprise the majority of gain types. Anhydrite is often abundant, comprising as much as 10 to 15 % of the rock volume. The anhydrite is often found filling voids and fractures. These are thinly bedded carbonates having generally good porosity.

Fusilinid Dolowackestones

This lithology makes up a minor component of the reservoir quality rock within the San Andres/ Grayburg interval. The wackestones are fossiliferous, containing fusilinids and occasional gastropods . Anhydrite is often abundant, comprising as much as 10 % of the rock volume.

Anhydrite

Several of the subcycles are capped by bedded anhydrite and anhydritic dolomudstones exhibiting teepee structures and solution collapse breccias. Anhydritic dolomudstones characterized by algal laminations, bioturbation, and abundant anhydrite nodules were also observed within the San Andres. Anhydrite content generally increases to the north of the study area. Due to the shallowing upward cycles, anhydrite content also increases with shallower depths.

Due to this complexity, the reservoir was broken into six zones, each with distinct lithologic and depositional characteristics. Each zone will be discussed separately. These six zones are: Zone 1 - Grayburg Dolomite, Zone 2 - Grayburg Sandstone, Zone 3 - Upper San Andres Dolomites, Zone 4 - Upper San Andres Sandstones, Zone 5 - Lovington Sandstone, Zone 6 - Lower San Andres Dolomites.

Zone 1 - Grayburg Dolomite

Zone 1 is dominated by tan ooid dolograinstones. These porous dolograinstones are present predominantly along the shelf break into the basin. Anhydrite volume varies from 2 to 10%, mainly filling voids from dissolution of fossil fragments. Thinly bedded dolomudstones and peloidal dolopackstones overlie the grainstones. This zone is interpreted to be an incomplete shallowing upward cycle. The culminating sabkha evaporites were either never deposited or stripped off by subsequent erosion.

Zone 2 - Grayburg Sandstone

Zone 2 is comprised of thin, interbedded argillaceous, very fine grained quartz sandstone and sandy dolomudstones. The contact between Zone 1 and Zone 2 is gradual, occurring over several feet of core. The base of Zone 2 is a sharp contact between the underlying Anhydrite cap of Zone 3 and a thin overlying dolowackestone.

Zone 3 - Upper San Andres Dolomites

Zone 3 comprises a thick zone of dolopackstones and dolograinstones. This zone contains the bulk of the reservoir quality rock within the San Andres/ Grayburg interval. The dolograinstones are rich in peloids, bivalves, fusilinides, and gastropods. Anhydrite is often abundant, comprising as much as 10 to 15 % of the rock volume. The zone contains minor amounts of mudstones containing sparse crinoids. The zone is generally capped by an anhydritic dolomudstone characterized by algal laminations and bioturbation, and abundant anhydrite nodules. Zone 3 represents several minor sea level fluctuations, with an overall shallowing upward cycle culminating in an evaporitic Sabkha. The upper portions of Zone 3 are interbedded with the sandstones of Zone 4.

Zone 4 - Upper San Andres Sandstones

Zone 4 is completely enclosed by the dolostones of Zone 3. The lithology of Zone 4 is represented by core in one well, VGSAU No. 34. The interval is a sandy dolomudstone with very fine quartz sand grains. The zone is characterized by moderate amounts of anhydrite, comprising up to 8% of the total rock volume.

Zone 5 - Lovington Sandstone

The Lovington Sandstone is a regional marker which can be readily distinguished from electric logs. At Vacuum Field, the Lovington is a buff gray dolomitic sandstone with abundant shale laminations. Sand grains are composed of very fine angular quartz. The upper portion of the

sandstone gradually grades into a sandy dolomudstone. In the northern portions of the study area, the Lovington may also exhibit the presence of a dark gray silty shale. The shales are interbeded with sandy/silty dolomudstones with abundant burrowing and algal laminations.

Zone 6 - Lower San Andres Dolomites

Zone 6 is an overall shallowing upward cycle, interrupted by several minor regressive intervals. The base of the zone is dominated by fussilinid rich dolowackestones. These grade upward to a thick peloidal rich dolograinstone. Several of the subcycles are capped by bedded anhydrite and dolomudstones exhibiting teepee structures and solution collapse breccias. The zone is culminated by a slight regression before terminating with the sandstones of Zone 5. This may indicate that the upper surface of Zone 6 is erosional, although the core descriptions did not document any rip-up clasts, scouring, or other erosional features.

Geologic Age:

Permian (Guadalupian).

Facies analysis for each reservoir . . .

Description of depositional facies: The reservoir was divided into six depositional facies. Each zone is correlative across the field using Gamma Ray and Neutron logs. The zones from shallowest to deepest have been described elsewhere in this report.

Distribution of facies across the project area: Due to the complexity and interfingering nature of the facies, the reservoir was broken into 6 zones, each with distinct lithologic and depositional characteristics. The six zonations described previously in this text have been mapped and included in the map pocket with this report. Each zone will be discussed separately. As can be seen on the cross sections, these six zones are: Zone 1 - Grayburg Dolomite; Zone 2 - Grayburg Sandstone; Zone 3 - Upper San Andres Dolomites; Zone 4 - Upper San Andres Sandstones; Zone 5 - Lovington Sandstone; Zone 6 - Lower San Andres Dolomites. Various mapped parameters of these zones are included in the Map Packet to this report.

Zone 1 - Grayburg Dolomite: Zone 1 is dominated by the tan ooid dolograinstone facies. These porous dolograinstones are present predominantly along the shelf break into the basin. Anhydrite volume varies from 2 to 10%, mainly filling voids from dissolution of fossil fragments. Thinly bedded dolomudstones and peloidal dolopackstones overlie the grainstones. This zone is interpreted to be an incomplete shallowing upward cycle. The culminating sabkha evaporites likely forming the top seal for this reservoir, are not included in the zone. Maps showing the structure and isopach thickness of the zone are provided. It is evident from these figures that the paleostructure influenced it's deposition. The porosity-height distribution is shown in map view, which is highest along the shelf break. This is due to the presence of the Ooid shoal facies in this area.

Zone 2 - Grayburg Sandstone: Zone 2 is comprised of thin, interbedded quartz sandstone and sandy dolomudstones of the Sheet Sand Facies. The contact between the overlying Zone 1 and Zone 2 is gradual, occurring over several feet of core. The base of Zone 2 is a sharp contact between the underlying anhydritic cap of Zone 3 and a thin overlying dolowackestone. Maps are provided showing the structure and isopach thickness of the zone. The porosity-height of the zone is also shown in map view. Again, the paleostructure influenced the deposition of the sand. Porosity is best developed in the thicker portions of the interval.

Zone 3 - Upper San Andres: Zone 3 comprises a thick zone dominated by the Carbonate shoal facies. This zone contains the bulk of the reservoir quality rock within the study area. It

represents several minor sea level fluctuations, with an overall shallowing upward cycle. The zone culminates in an evaporitic Sabkha facies. The Sabkah facies becomes thicker sand better developed in the northern portions of the study area, where it interfingers with the carbonate shoal. This shoreward transition from porous carbonate shoal to sabka creates the lateral seal to the reservoir. Maps are provided to show the structure and isopach thickness of the zone. Thickening over the paleohigh is created by an expanded section of sandstones (zone 4). The upper portions of Zone 3 are interbedded with the sandstones of Zone 4. Average porosity is best developed to the south on the shelf margin.

Zone 4 - Upper San Andres Sandstones: Zone 4 is completely enclosed by the dolostones of Zone 3 and represents the barrier bar complex.. Three separate and distinct sandstone bodies have been identified, often stacked. Where present, this zone adds to the overall thickness of the San Andres, accenting the structural relief. This zone appears seaward of the pinch-out of the underlying Lovington Sandstone (Zone 5). This is interpreted as evidence of paleostructural control for the development of both Zones 4 and Zone 5. Maps are provided to show the isopach thickness of these sand bodies.

Zone 5 - Lovington Sandstone: The Lovington Sandstone is a regional marker which can be readily distinguished on electric logs The isopach map shows the zone pinches-out seaward, being absent on the highest portions of the structure and on the shelf break. A structure map on the top of the zone is also provided. Because the zone is absent to the south, some areas within the study are not contoured on the maps. Average porosity of the zone increases northward.

Zone 6 - Lower San Andres: Zone 6 is an overall shallowing upward cycle, interrupted by several minor regressive intervals. The base of the zone is dominated by fussilinid rich dolowackestones. These grade upward to a thick peloidal rich dolograinstone. Several of the subcycles are capped by bedded anhydrite and dolomudstones exhibiting teepee structures and solution collapse breccias. The zone is culminated by a slight regression before terminating with the sandstones of Zone 5. This may indicate that the upper surface of Zone 6 is erosional, although the core descriptions did not document any rip-up clasts, scouring, or other erosional features. A map is provided showing the structure on the top of the lower San Andres and isopach thickness. The porosity-height map is also provided indicating distribution of the higher energy facies.

Distribution of porosity, permeability, oil saturation, and net pay by facies: The distribution of those parameters studied on a facies level have been presented in map format, and are included in the map pocket to this report. Where available, normalized, digital porosity values are provided for all wells within the study area. These digital values are found in the Stratamodel files (8-mm tape, well model), the Access database (Bernoulli No. 2, Access\cvu.mdb - vaclogs table), and the digital Geographix files (Bernoulli No. 1; GES\vacproj\vaclas2\ in LAS format). All well log designations are based on the last 5 digits of the API number assigned to that well (cross reference available in the ACCESS database).

The distribution of rock and reservoir properties were studied by use of Stratamodel and Geographix. Maps are provided for Porosity, Permeability, Oil Saturation, Gross and Net Pay, Storage Capacity (Phi*h), Flow Capacity (K*h), Total Pore Volume (TPV), Hydrocarbon Pore Volume (HCPV), and Original-Oil-In-Place (OOIP). Most of these type maps are available for each of the six zones, when applicable. TPV, HCPV, and OOIP are also available on a pattern basis; provided in spreadsheet format in conjunction with the waterflood review (Bernoulli No. 1: WF_Review).

Geographix, Stratamodel and Access database files all contain the formation and macro-zonation picks used to characterize the San Andres and Grayburg reservoirs (Bernoulli No. 2, Access\cvu.mdb & Stratamodel: 8-mm tape). The Geographix program was also used to construct cross sections through every well in the CVU and VGSAU (Bernoulli No. 1; GES\vacproj). These cross sections are

stratigraphically hung on the Grayburg Marker. They show all formation and zone picks, as well as the current (9/1/95) perforations within each well. Wells without available logs are depicted as sticks, with all well locations scaled to actual distance on the ground.

Cross-plot of permeability vs. porosity by facies: The relationship between porosity and permeability is graphically depicted in hardcopy format (Neural Network Packet and within the Vacuum Core Database Info packet). This data is also provided in digital format (Bernoulli No. 1: Neural\Access & \Excel). The neural network was invoked to assist in spatially relating porosity and permeability.

Wireline log response to depositional facies: Reference is made to the cross sections (Bernoulli No. 1; GES\vacproj) and core description (13 wells in individual packets) found in the accompanying pockets to this report. As most wells only have Gamma Ray and Neutron porosity logs available, the discussion will be limited to those two log types.

> **Open Marine:** This facies is characterized by clean, low Gamma Ray readings and moderate to high porosity values. Typically, anhydritic ledges where the porosity has been destroyed are present. these ledges exhibit the same clean low gamma Ray values as the porous intervals.
>
> **Carbonate Shoal:** This facies is characterized by clean, low Gamma Ray readings and moderate to high porosity values. Typically, anhydritic ledges where the porosity has been destroyed are present. These ledges exhibit the same clean low Gamma Ray values as the porous intervals. This facies is very difficult to distinguish from the Open Marine Facies when using only log response.
>
> **Barrier Bar Complex:** This facies is represented by core in VGSAU No. 34. The interval exhibits sharply higher Gamma Ray values. The neutron porosity logs indicate excellent porosity, often due to the quartz matrix. Gamma ray values often clean up within the interval, creating a upper and lower shoulder effect. Logs seem to indicate that the sandy dolomudstones seen in the core may interfinger with dolomitic quartz sandstones in nearby wells where the facies is thicker and better developed.
>
> **Sheet Sand:** This facies is represented by the sandstones of the Lovington Sandstone and the Grayburg Sandstone. The facies is characterized by high gamma ray and high neutron porosity values. This response is most likely a response to the shale content observed in the core. Where the interval is thickly developed, shoulders of higher gamma ray values, with a central portion of lower values is often seen. However, these lower gamma ray values never reach the clean carbonate levels.
>
> **Sabkha:** This facies is best distinguished by slightly lower Gamma values with extremely low neutron porosity values. The porosity often reads below zero, mainly due to the presence of anhydrites.

Horizontal continuity and vertical communication of facies: No measures of horizontal continuity have been performed. However, from a qualitative approach, the reservoir will likely recover approximately +40.0% OOIP through secondary recovery methods, suggesting that there is considerable continuity at the predominant 20-Acre well spacing. There is likely little vertical communication between facies. The heterogeneous nature prohibits vertical movement between facies, and within facies. Hydraulic fracturing within near-wellbore vicinities would likely allow some crossflow. Core measurements support only ~30.0% vertical:horizontal permeability relation. Although simulations cannot reach adequate history matches without reducing vertical permeability to insignificant values.

Description of geologic elements . . .

Depositional environment: The Grayburg/San Andres carbonates and sands penetrated by wells in the Vacuum field are interpreted as deposits of shallow shelf-margin cyclic subtidal shoals, intertidal to tidal flat deposits, and evaporitic sabkha environments. Within the Upper San Andres, a barrier bar complex appears to have developed. The entire Grayburg/ San Andres section is composed of a series of shallowing upward sequences representing 3rd or 4th order sea level fluctuations. A block diagram depicting the relationship of these depositional environments to the paleostructure is provided below to help visualize the relationships. Cross sections through the wells with described core are also included as reference to facies distribution (see above).

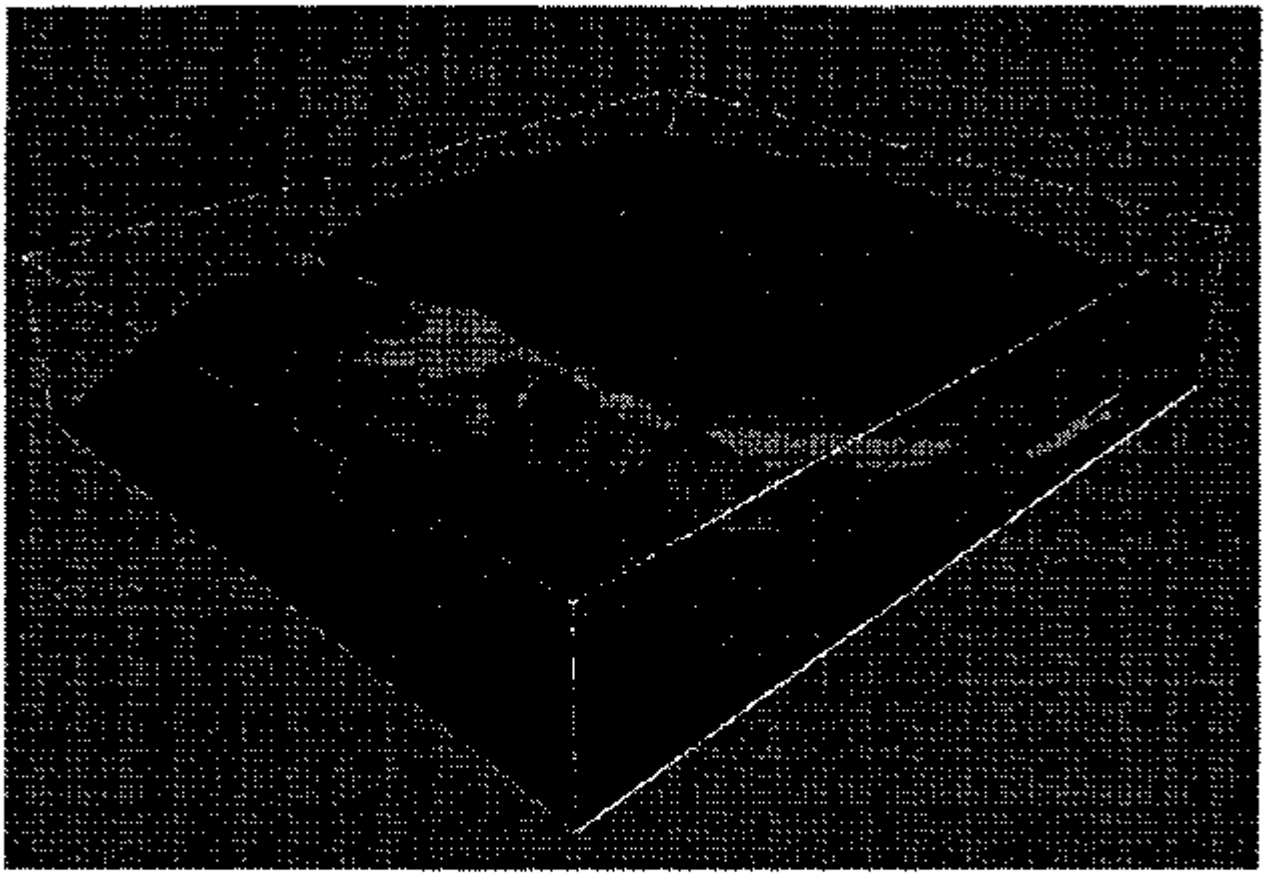

Description of depositional facies:

Open Marine: This facies is predominately found in the Lower San Andres. It is characterized by tan, finely crystalline dolowackestones with abundant Fusilinids. Many of the Fusilinids have been replaced with anhydrite. The facies is typically very porous, with a mixture of moldic and intercrystaline pores. Very few carbonate grains are present in this facies. This facies is commonly found seaward of the carbonate shoal environment, moving onto the shelf during sea level highstands.

Carbonate Shoal: This facies is the major component of the porous reservoir rock. It is present in both the Upper and Lower San Andres . The facies is typically a tan peloidal dolopackstone, occasionally grading into a dolograinstone. Fossils are common in this facies, but only locally.

Oolid Shoal: This facies is found only in the Grayburg Dolomite, and only on the crest of the Paleostructure. The facies is characteristically a tan oolitic dolograinstone with abundant peloids and occasional intraclasts. Minor amounts of very fine, well sorted angular quartz grains may be present locally. Anhydrite content may be as high as 15%, normally as fracture fills and intercrystalline growths. Porosity is good, but not excellent, due to the anhydrite content.

Barrier Bar Complex: This facies is represented by core in VGSAU No. 34. In this well, the interval is a sandy dolomudstone with very fine quartz sand grains. The facies is characterized by moderate amounts of anhydrite, comprising up to 8% of the total rock volume. Logs indicate that the sandy dolomudstones may clean-up into dolomitic quartz sandstones in nearby wells where the facies is better developed. Three separate and distinct sandstone bodies have been identified from logs, often stacked. Where present, the bar complex adds to the overall thickness of the Upper San Andres, accenting the structural relief. This facies is only present seaward of the Lovington Sandstone pinch-out, on the crest of the paleostructural high. This is interpreted as evidence of structural control for the development of the bar complex and the reworked sheet sands of the Lovington.

Sheet Sand: This facies is represented by the sandstones of the Lovington Sandstone and the Grayburg Sandstone. The facies is characterized by buff colored dolomitic sandstone, often with horizontal bedding. Thin gray to green shale laminations are abundant. The sand is composed of poorly sorted very fine to fine sized angular quartz. Minor amounts of rounded medium sized quartz grains were also observed. Anhydrite is rare. This facies probably deposited during sea level low stands as transported eolian deposits. These were subsequently reworked during the next transgressive cycle.

Sabkha: This facies is found throughout the carbonate sections of the Grayburg and San Andres. The facies represents the landward extent of porous carbonates. Replacement of carbonate grains by evaporites has occluded most primary and secondary porosity, making this facies a flow barrier and non-reservoir rock. Originally deposited as gypsum, the anhydrite exhibits both bedded and nodular forms. Collapse breccias, teepee, and fenestral structures are prevalent. This facies represents the culmination of the shallowing upward depositional cycles.

Reservoir diagenesis: The implied diagenetic events are not listed in paragenetic sequence. They were observed primarily in grainstones, but may also occur in the other textures found within the Grayburg and San Andres Fm's.

Late dolomite leaching was not observed
Intercrystalline dolomite cements are stoichiometric
The unstable calcium centers of CCCR (cloudy center, clear rim) dolomites are commonly leached.
Minor amounts of late, isolated calcite cement were observed.
Pore filling calcite cement is commonly 3-4 microns in size
Moldic porosity in packstones and wakestones is filled with anhydrite, dolomite or clay.
Dolomite and clay appear to have precipitated contemporaneously
Trace amounts of Illite are present locally in packstones.
In sandy units, grains include quartz and corroded K-feldspars
Finely crystalline dolomite cement was found lining intercrystalline pores

A thesis complete by Jeffrey Robertson at Texas A&M University, titled "Depositional Environments, Diagenetic History, and Porosity Development, of the Permian San Andres Formation, Vacuum Field Lea

County, New Mexico", 1989 extensively covered this subject. Industry findings are in agreement with those stated in the Thesis.

Diagenetic events with increasing time and depth of burial are as follows:

1. Marine - phreatic environment was responsible for the formation of Anhydrite nodules, exposure, compaction and matrix dolomitization.

2. Mixed - phreatic environment was responsible for matrix dolomitization, leaching of nondolomitized grain, and formation of a second generation void filling dolomite.

3. Meteoric-phreatic environment was responsible for leaching all remaining nondolomitized grains, and mechanical compaction,

4. Deeper subsurface environment was responsible for formation fractures, styolites, void-filling anhydrite, replacement pyrite, and void filling chlorite.

Structural style: The structure of the Vacuum (Grayburg - San Andres) field is a broad, low relief anticline. The predominate anticlinal axis trends north-south along a deep-seated basement involved normal fault. This fault appears regional in nature and may be the northern extension of faulting associated with the uplift of the Central Basin Platform. The faulting was active during Late Mississippian. Evidence for this is provided by erosion and thinning of the deeper formations on the paleostructure. The up-thrown fault block is productive from the Devonian formation within Vacuum field. No faulting has been identified at the San Andres horizon, either from logs or seismic.

Closure to the south is provided by steeply dipping beds at the shelf margin into the Delaware Basin proper. Development of drape over the Permian Abo reef complex in the southern portions of the field further enhanced the structural complexity. This tended to elongate the anticline easterly, creating an area of structural closure more than 6 miles in width.

Closure of the productive intervals to the north is both structural and stratigraphic. As can be seen in structure maps, gentle northern dip can be demonstrated. However, the predominate hydrocarbon trapping mechanism on the north end of the field is a facies transition from porous dolomites to non-porous dolomitic anhydrites. This represents the landward extent of the intertidal facies , completing the basin-to-sabkha transition.

Evaluation of reservoir heterogeneity . . .

Many studies are available in the literature that document San Andres and Grayburg heterogeneity at both the macro and microscopic levels.

Reservoir heterogeneity is best evaluated at the macroscopic level by observing slices through the StrataModel cube, making cross section views that show porosity variation. The StrataModel files (8-mm tape) contain the needed information to observe interwell heterogeneity at almost any location within the study area.

The geostatistical evaluation of the reservoir quantifies the heterogeneity by both the variogram and bias direction values.

Microscopic heterogeneity; pore throat size distribution: Pore Throat size distributions were studied as part of a Masters Thesis by Jeffrey Robertson at Texas A&M University. The thesis is titled "Depositional Environments, Diagenetic History, and Porosity Development, of the Permian San Andres Formation, Vacuum Field Lea County, New Mexico", 1989.

Our study of porosity/permeability relationships (fully documented in earlier reports) indicates a specific and recognizable distribution for each of the 6 zones studied. Results of the neural network (Neural Network Packet) show that permeability is a function of the zone, aerial location within the study area, and porosity.

Two spreadsheets (Bernoulli No. 1; Neural\excel) are provided which indicate the results of our study. Permeability maps, at specific porosity values, for each zone are included. These maps show the neural network results at each location, given a specific zone and specific porosity value (Neural Network Packet).

In addition, graphs indicating the porosity/ permeability relationship at the southern, middle and northern portions of the study area are provided for the Upper and Lower San Andres zones (Neural Network Packet & see spreadsheets mentioned above).

Macroscopic heterogeneity; features at interwell scale: See above comments as they relate. Specifically, the studies involving Neural Networks, facies distributions, cross sections, and StrataModel results.

Megascopic heterogeneity; features at field/reservoir level: Study not performed as part of this work.

FLUID CHARACTERISTICS

Initial reservoir pressure: 1,613 to 2,000 psia depending on location/test.

Log of reservoir pressure vs. production (or time): Has not been tabulated for the project area. The New Mexico Oil and Gas Conservation Commission, along with the New Mexico Engineering Committee collected this type of data in the early life of the field and is available through research of their files in Hobbs, New Mexico. Limited reservoir pressure measurements have been conducted during the course of waterflooding the property. The formation fracture gradient is more of a limitation influencing the reservoir pressure. No reservoir pressure data was gathered for the subject project. However, in early 1995, a number of 10-acre infill locations penetrated the study area. A stabilized bottomhole pressure of 1,450 to 1,700 psig was noted.

Reservoir temperature: Various; between 95 - 105°F.

Oil Gravity: Various; between 37 - 39 ° API

Oil viscosity at standard conditions: 2.19 cp (14.7 psia & 105°F)

Oil viscosity at in-situ reservoir conditions: 1.01 cp

Initial Oil Formation Volume Factor (B_{oi}): 1.259 to 1.312 RVB/STB depending on location/test.

Initial Bubble Point Pressure: 1,233 to 1,350 psia depending on location/test.

Initial gas in solution (R_s): 320 to 465 scf/STB depending on location/test.

Fluid composition test (CO_2, N_2, H_2, Hydrocarbons, etc): Compositional analyses are provided within the various Fluid Analyses provided in a pocket (Reservoir Fluid Studies Pocket) to this report.

Gas gravity:	1.2523 (Air = 1.0; 60°F)
Gas viscosity:	.0091 cp (14.7 psia & 105°F)
Initial Gas Formation Volume Factor (Bg):	No free gas initially
Log of B_o, R_o, B_g as a function of reservoir pressure:	Not available.
Water density:	Specific Gravity = 1.058
Water viscosity:	Est. 1.0 cp
Water Salinity:	Avg. 56,000 ppm

Field Development History

RECOVERY TECHNIQUES UTILIZED

Primary . . .

Start date: Field discovery was 1929, however development did not occur until 1937 when a pipeline was installed. First production from the CVU was December, 1937.

Project life: Primary production by gas expansion was utilized until waterflooding operations were initiated within the CVU in 1978.

Estimated incremental recovery: 22.4 MM STB due to primary recovery mechanisms.

Monthly production by well: See digital production/injection database included with this report (Bernoulli No. 1; Prod_inj).

Type of injectant: Primary recovery, by definition does not include any injectant.

Injection schedule (Bbl/day/well): See above comment.

Number and timing of new wells drilled (producer, injection, disposal): See production database (Bernoulli No. 1; Prod_inj). Initial production or injection for a well indicated the month of completion. No disposal wells are utilized. All produced water is recycled within the project. No wells were drilled as part of this DOE contract.

Number and timing of wells converted (producer, injection or to disposal): See production database (Bernoulli No. 1; Prod_inj). A well with a previous production history which changes to water injection will indicate a conversion. No wells at CVU have been converted to injection--they were drilled as injectors. No injection location has ever been converted back to production. There are no disposal wells in the CVU.

Secondary . . .

Start date: Most water injection wells within the CVU were drilled/completed during 1978 and 1979. Leaseline injection initiated at various stages between 1980 and 1982.

Project life: Secondary operations (waterflooding) have been in progress since 1978.

Estimated incremental recovery: Ultimate recovery due to waterflooding is estimated at 22.4 MM STB.

Monthly production by well: See production database (Bernoulli No. 1; Prod_inj).

Type of injectant: Water.

Injection schedule (Bbl/day/well): See production database (Bernoulli No. 1; Prod_inj).

Number and timing of new wells drilled (producer, injection, disposal): See production database (Bernoulli No. 1; Prod_inj). Initial production or injection for a well indicated the month of completion. No disposal wells are utilized. All produced water is recycled within the project. No wells were drilled as part of this DOE contract.

Number and timing of wells converted (producer, injection or to disposal): See production database (Bernoulli No. 1; Prod_inj). A well with a previous production history which changes to water injection will indicate a conversion. No wells at CVU have been converted to injection--they were drilled as injectors. No injection location has ever been converted back to production. There are no disposal wells in the CVU.

Tertiary . . .

Start date: 1984

Project life: Less than three years.

Estimated incremental recovery: Not available, but considered minor relative to secondary.

Monthly production by well: See production database (Bernoulli No. 1; Prod_inj).

Type of injectant: Polymer

Injection schedule (Bbl/day/well): Records no longer exist/misplaced.

Number and timing of new wells drilled (producer, injection, disposal): None.

Number and timing of wells converted (producer, injection or to disposal): None.

Advanced secondary (including horizontal drilling) . . .

Start date:	None.
Project life:	n/a
Estimated incremental recovery:	n/a
Monthly production by well:	n/a
Type of injectant:	n/a
Injection schedule (Bbl/day/well):	n/a

Number and timing of new wells drilled (producer, injection, disposal): n/a

Number and timing of wells converted (producer, injection or to disposal): n/a

FOR EACH WELL IN THE PROJECT AREA

Well Name	See digital production/injection database (Bernoulli No. 1; Prod_inj).
Existing Well or Project Well?	All existing; none drilled for project.
API Reference No.	See digital production/injection database (Bernoulli No. 1; Prod_inj).
Completion Data	See digital Completion database provided (Bernoulli No. 1; Complete).

Formation top (MD & TVD)	See databases (Bernoulli No. 1; GES \vacproj, Bernoulli No. 2; Access\).
Formation base (MD & TVD)	The base extends well below current completions and is not recorded.
Total depth (MD & TVD)	See Appendix "A".
Vertical or Horizontal?	All wells in study area are vertical.
Horizontal: radius, lateral, TVD, MD	See above comment.
Status (producing; flowing or artificial lift)	See digital production/injection database (Bernoulli No. 1; Prod_inj)..
Type of artificial lift	Most wells are produced via insert rod (beam) pump. A number of Electrical Submersible Pumps are in operations within the CVU.
Perforated Intervals (MD)	See digital completion database for detail (Bernoulli No. 1; Complete), and/or (Appendix "A") for overall completions.
Cored intervals	See digital core database (Bernoulli No. 1; Core) and individual descriptions (13 well packets).
Completion Type (OH, gravel pack, cased and perforated, etc.)	See completion database (Bernoulli No. 1; Complete).
Stimulation type (acid, fracture treatment)	See forms PO-90/State completion reports, included in Appendix "A" for wells in demonstration area.
Stimulation size	See forms PO-90/State completion reports, included in Appendix "A" for wells in demonstration area.
If wells are offshore . . .	
OCS area	n/a
Lease number	n/a
Platform size (well slots)	n/a
Water depth (ft)	n/a

FIELD PRODUCTION CONSTRAINTS AND DESIGN LOGIC

Qualitative review of reservoir description and development history:

The reservoir is a carbonate deposited in a shallow shelf environment. Structurally, the CVU is in a very good position within the field. Most of the reservoir has responded in a textbook fashion to waterflooding, except for the far south and northeast regions. The northeast area is simply becoming more mixed with Sabka depositional strata. The south dips sharply at the margin of the Delaware Basin and become much more heterogeneous/discontinuous. There are a few sandstone members, none of which exist over the entire field/study area. The sandstones have considerable carbonate material mixed in and is considered to be non-pay due to it's relatively low permeability. The Grayburg dolomite is a minor pay contributor. The major pay is the Upper and Lower San Andres zones. Carbonates above 7.0% porosity contribute to 98.0% of the flow capacity of these zones. As San Andres reservoirs go, the Vacuum field is at the high end of quality. Continuity is fairly good in some locations with the average permeability near 22.0% in the pay zones.

The Vacuum Field was discovered in May, 1929 by the Socony Vacuum Oil Company--now known as Mobil. The discovery well was the New Mexico "Bridges" State Well No. 1 (drilled on the section line of Sec's 13 & 14, T16S R34E). The well was shut-in until 1937 when pipeline facilities became available to the area. Field development began in late 1937 and by 1941, 327 wells had been completed on 40-acre spacings. By year 1947, the field had been extended approximately two miles to the west. Scattered reservoir development continued slowly over the next two decades. There was not much emphasis directed at the Vacuum Field properties since the majority were producing at state "allowable." Because the wells situated most favorably were expected to continue at "allowable" the peripheral properties would become the first targets of attention. The first enhanced recovery attempt in the Vacuum Field was a pilot waterflood by Socony Vacuum (Mobil) which began December 1958. Enhanced recovery on the Texaco leases began with the unitization of the West Vacuum Unit (WVU) with waterflooding beginning in 1966. In 1972-73 a second stage of reservoir development began with the unitization of the Vacuum Grayburg-San Andres Unit (VGSAU) and infill drilling which reduced the well spacing to 20-acre. The VGSAU waterflood was initiated in 1973. ARCO initiated their State Vacuum Unit in 1977. The Central Vacuum Unit (CVU) became official in 1977 with water injection beginning in 1978. The CVU was infill drilled on 20-acre spacings during the period 1978-1982. Phillip's East Vacuum Grayburg-San Andres Unit began in 1978 along with a co-op flood in Section 35. A polymer augmented waterflood was incorporated and completed during the 1980's on both the VGSAU & CVU. Other operators in the Vacuum field also implemented Polymer floods due to incentives available to reduce the Windfall Profits Taxation burdens. Further reservoir development began in 1987 with infill drilling on 10-acre spacings at the CVU. Infill drilling continues sporadically. Enhanced recovery operations by waterflooding are in progress across the entire Vacuum field, and Carbon Dioxide Miscible Flooding (CO_2) was initiated by Phillips in the southeastern portion of the field in 1985. In addition to the San Andres/Grayburg producing horizons, there are 12 other formations that are, or have been productive in the Vacuum field. These, mostly deeper horizons were developed predominantly during the 1960's.

Problem statement - constraints on further producibility . . .

Technological: Heterogeneous reservoirs, such as the Shallow Shelf Carbonate depositional environment at Vacuum field leads to poor aerial and vertical sweep efficiencies. Most notably the hydrocarbon saturation remains relatively high in the near wellbore vicinity of producing wells in waterfloods.

Economical: Low crude oil prices. No federal energy policy. High overhead distribution from large corporate structures. Unfair taxing procedures on Major Oil Companies. Major's should be looked at as simply a group of subsidiaries below a parent. Each must function as a separate entity, which is some times smaller than larger independents in the same business area. Yet, because they are "integrated" corporations they are disproportionately taxed relative to the other companies. In reality, the integration

comes from the downstream operations which over the last decade have resulted in losses to the bottom line in many cases. Double jeopardy, on top of the corporate overhead distributions.

Environmental: Too many costly restrictions resulting in a poor cost/benefit ratio.

Other: Probably others not so apparent.

Method of problem detection: Material balance and volumetric calculations of reservoir conditions. Wireline log analysis. Infill drilling results. All support a significant hydrocarbon saturation left behind in the field.

Application of new tools or techniques: To be determined.

Inconsistency between the design and actual performance: To be determined.

Proposed solution for reduction of constraints: Field demonstration of CO_2 Huff-n-Puff process in Budget Period No. 2.

Development plan for project impact and projected incremental production: To be determined.

Actual implementation of project; noting any departures from plan:

To be determined in Budget Period No. 2.

Evaluation . . .

Actual impact on the project's reserves and production; interpretation of any differences from projection:

To be determined in Budget Period No. 2

Assessment of potential value of the proposed work to fields/reservoirs of similar type:

To be determined in Budget Period No. 2

Evaluation of Cost-Share Project Results

TYPE OF PROJECT

Secondary: n/a

Tertiary: CO_2 Huff-n-Puff demonstration.

Advanced secondary (including horizontal drilling): n/a

INJECTION PROGRAM

Type of Injectant: Carbon Dioxide (CO_2)

Injection schedule (volume/day/well): To be determined in Budget Period No. 2

Injection pattern (before the inception of cost-shared project and proposal): 20-Acre Line drive pattern.

Number and schedule of new producers drilled: None. Use existing wellbores.

Number and schedule of new injectors drilled: None. Use existing wellbores.

Number and schedule of conversion wells: None. Producer used temporarily as injector to place CO_2 only, then turned around to produce fluids.

SIMULATION STUDY

Type of simulator utilized: Western Atlas' VIP-Compositional Simulator

Complete set of rock and fluid data used in the simulator:

1.) Historical production data by well: Simulation is still in progress & continues with refinements based on actual results during Budget Period No. 2. This data will be supplied in Topical Rpt. No. 2 at conclusion of project.

2.) Historical injection data by well: Simulation is still in progress & continues with refinements based on actual results during Budget Period No. 2. This data will be supplied in Topical Rpt. No. 2 at conclusion of project.

3.) PVT Data: Simulation is still in progress & continues with refinements based on actual results during Budget Period No. 2. This data will be supplied in Topical Rpt. No. 2 at conclusion of project.

4.) Relative permeability (k_{ro}, k_{rw}, k_{rg}): Simulation is still in progress & continues with refinements based on actual results during Budget Period No. 2. This data will be supplied in Topical Rpt. No. 2 at conclusion of project.

5.) Three dimensional grid of porosity, permeability and fluid saturation: Simulation is still in progress & continues with refinements based on actual results during Budget Period No. 2. This data will be supplied in Topical Rpt. No. 2 at conclusion of project.

6.) Rock compressibility factor: Simulation is still in progress & continues with refinements based on actual results during Budget Period No. 2. This data will be supplied in Topical Rpt. No. 2 at conclusion of project.

Simulation of performance for oil, gas, water and reservoir pressures:

1.) History match of reservoir performance prior to cost-shared project: Simulation is still in progress & continues with refinements based on actual results during Budget Period No. 2. This data will be supplied in Topical Rpt. No. 2 at conclusion of project.

2.) Projection of performance of cost-shared project: Simulation is still in progress & continues with refinements based on actual results during Budget Period No. 2. This data will be supplied in Topical Rpt. No. 2 at conclusion of project.

3.) Comparison of actual with projected performance and any diagnostic simulators done to account for the differences: Simulation is still in progress & continues with refinements based on actual results during Budget Period No. 2. This data will be supplied in Topical Rpt. No. 2 at conclusion of project.

PROJECT ECONOMICS

Incremental non-drilling capital costs (compressors, etc.): To be determined during Budget Period No. 2.

Fixed operating cost (lifting cost, etc.): To be determined during Budget Period No. 2.

Process dependent operating costs ($/well/month):

1.) Injectant purchase cost: To be determined.

2.) Injection and recycling cost: To be determined.

3.) Treatment and disposal costs: To be determined.

Drilling and completion costs ($/well): No wells drilled as part of this contract/project.

Reservoir description costs . . .

1.) Data gathering and processing (logs, cores, seismic): To be determined.

2.) Reservoir simulation study: To be determined.

3.) Other: To be determined.

Supporting Data

Logs (all open-hole and cased-hole): See digital log database (Bernoulli No. 1; GES\vacproj\vaclas2, & Bernoulli No. 2; Access).

Available maps (oil isopach, gas isopach, structure, net pay, HC volume, etc.): All maps have been included in the map pocket to this report (also available digitally in Stratamodel & GES, 8-mm tape & Bernoulli No. 1; GES\vacproj, respectively).

Cross sections: See digital Geographix cross-section database (Bernoulli No. 1; GES\vacproj).

Seismic sections: No seismic information was acquired as part of this project.

3-D seismic interpretations: None performed as part of this project.

PVT analysis reports: Included with Reservoir Fluid Analyses in pocket to this report.

Core analysis reports: See Core Database (Bernoulli No. 1; Core).

Core descriptions and thin sections: Please see 13 individual well packets included.

Directional surveys: Not Applicable.

Well schematics: See Wellbore Schematics included with Appendix "A".

Injectivity Tests: None known to exist in demonstration area.

Well completion reports: See form PO-90's for demonstration area wells (Appendix "A").

Well workover histories: See form PO-90's for demonstration area wells (Appendix "A").

Simulation output: See timetable availability of data provided under Simulation Study, above.

Special laboratory studies . . .

Rock/chemical compatibility tests: None performed.

Fracture descriptions: None known to exist.

Mechanical preparation: None.

Minimum miscibility pressure measurements: 1,190 - 1,250 psia depending on location/time of test. Optimum Vaporization pressure concluded to be 1,650 psia. The MMP & OVP studies for Vacuum reservoir fluid are included with reservoir fluid studies in a pocket to this report (Reservoir Fluid Studies Packet).

Special Core flood tests: Several conducted in previous years. These have been included with reservoir fluid studies in a pocket to this report (Reservoir Fluid Studies Packet).

Results of pilot flood tests: None conducted.

DST reports: None known to exist in the demonstration study area.

Pressure buildup or drawdown tests: None conducted as part of this study.

Tracer studies: No known chemical tracer studies were, or have been conducted in the CVU.

Environmental Information

Surface elevation: Averages 3,990 ft. above sea level.

Surface conditions (plains, wetlands, etc.): High desert plains. Flat w/ few features. No/Little sandy soil on exposed caliche.

Distance from navigable surface water (if < 5 mi.): A very long way. Well more than 5 miles, or 50 miles ...

Distance from air quality non-attainment area (if < 20 mi.): Greater than 20 miles (even to nearest town).

Location (depth) of groundwater < 10,000 TDS: Ogalalla Fm. is found as shallow as 80 ft from surface.

Depth of surface casing: First Casing string is set at approximately 1,500 ft from the surface.

Volume of produced water: The project will produce no more water than the maximum currently being produced, which is approximately 700 BWPD in the first demonstration site. Other potential demonstration sites are considerably less water volume.

Produced water quality (if state requires tests): Not required.

Produced water treatment/disposal methods used: Produced water is recycled within the existing waterflood. It is chemically treated for scaling tendencies at various sites within CVU. There are no volumes requiring disposal.

Volume of drilling wastes from new wells: None drilled as part of this project.

Drilling mud content for new wells: Not applicable to this project, see comment above.

Drilling mud handling practice (closed system, lined pit, unlined pit): Not applicable to this project, see comment above.

Location, size, purpose of any surface impoundments at site: Not applicable. None at demonstration site.

Results of recent mechanical integrity tests: The State of New Mexico requires routine mechanical integrity tests. Any failure of the integrity tests are handled on a timely basis as provided by State law. There are no known wells failing their mechanical integrity tests within the CVU study area.

Results of "Area of Review" studies for injection wells: Area of Review is performed when permitting new injection wells or a change in mode of operations. The demonstration site is within an area of recent infill drilling. The entire area passed the Area of Review investigation at that time.

APPENDIX "A"

Wellbore Schematics
Form PO-90: Completion/Stimulation Data
State of NM Completion Reports

CENTRAL VACUUM UNIT

CO_2 HUFF-n-PUFF

DEMONSTRATION AREA

Est 5-4550

EDC WO: This workover will result in the recovery of new identifiable production and reserves that will not otherwise be recovered by the present completions.

Form 70-16 (N)

RECOMMENDED REMEDIAL WORK

(117) D-22

Date JANUARY 2, 1985

Lease CENTRAL VACUUM UNIT Well No. 93 (WIW) TX. Work. Int 26.27108 %

Pool VACUUM GRAYBURG SAN ANDRES County LEA State NEW MEXICO

All depths measured from KB or 12 ft. from ground level.

TX. Comp. Date 5-2-79 @ T. D. 4800 I. P. Oil WIW Water Gas MCF

GOR Hrs. Pump. Flow. Present T. D. 4770 PBTD Elevation 3994 KB DF

DESCRIPTION OF PROSPECTIVE OR PAY ZONES

Name or Type of Zone	Top	Base	Remarks
VACUUM GRAYBURG SAN ANDRES	4356	4706	PRESENT INJECTION INTERVAL

CASING AND LINER RECORD

Size	Weight	Grade	Set At	Sacks Cement	Hole Size	Perf.	Remarks
13-3/8	48	H-40	360	400	17-1/2		CEMENT CIRCULATED
9-5/8	32.3	K-55	1500	800	12-1/4		CEMENT CIRCULATED
7	23	K-55	2800	200/350	8-3/4		TWO STAGE - CMT CIRC
4-1/2	10.5	K-55	4800	800	6-1/8	4356-4706	CEMENT CIRCULATED

COMPLETION AND REMEDIAL WORK RECORD

Date	Production Test Before Oil	Water	GOR	Hrs	Treatment Type	Amount	From	To	Production Test After Oil	Water	GOR	Hrs
5-2-79	NEW COMPLETION				ACID, 15%	5000 gals	4608	4706	INJECTION WELL			
5-2-79	NEW COMPLETION				ACID, 15%	3000 gals	4519	4566	INJECTION WELL			
5-2-79	NEW COMPLETION				ACID, 15%	4500 gals	4356	4566	INJECTION WELL			
8-1-83	INJECTING 1270 BWPD @ 730#				BLEACH	500 gals	4356	4706				
8-2-83					ACID	500 gals	4356	4706	INJECTING 1490 BWPD @ 710#			

Remarks: FIRST WORKOVER SINCE INITIATION OF TERTIARY RECOVERY. PRESENT INJECTION RATE 740 BWPD AT 860 PSIG. PERFS: 4356, 67, 75, 84, 93, 4400, 28, 35, 58, 4519, 21, 42, 50, 66, 4608, 26, 31, 42, 4649, 55, 61, 72, 83, 94, 4706.

Present Allow. 871 PSIG **Max. Allow.** **Accum. Inj.** 2,359,303 as of 11-20-84

Present Test: Oil **Water** **Gas** **GOR** **Hrs.** **Pump. Flow.**

Choke Size **Pressure** **Tbg Pressure**

Reasons for Remedial Work: TO INCREASE PRODUCTION 50 BOPD IN OFFSET PRODUCING WELLS BY REPERFORATING AND RESTIMULATING THE EXISTING INJECTION ZONE IN THE SUBJECT WELL. THIS WORK IS ANTICIPATED TO RESTORE THE WELL TO ITS FORMER LEVEL OF INJECTIVITY, WHICH HAS DECLINED 250 BWPD WITHIN THE PAST 18 MONTHS.

Petroleum Engineering Recommendations and Procedure:

1. STABILIZE WELL AND RUN INJECTION PROFILE.
2. MOVE IN, RIG UP. INSTALL BOP.
3. RELEASE PACKER AND TAG BOTTOM. CLEAN OUT FILL, IF NECESSARY.
4. SPOT 5 DRUMS OF 10% ACTIVE SODIUM HYPOCHLORITE ACROSS PERFS. PULL OUT OF HOLE.
5. PERFORATE THE FOLLOWING INTERVALS WITH 2 JSPF: 4356, 67, 75, 84, 93, 4400, 28, 35, 58, 4519, 21, 42, 50, 66, 4608, 26, 31, 42, 45, 55, 61, 72, 83, 94, 4706. (25 in. 50 shots)
6. GO IN HOLE WITH 4-1/2" RETRIEVABLE [illegible] AND RETRIEVE [illegible]

TEXACO E&P INC
CENTRAL VACUUM U NO. 93 WIW
API# 30025257330000

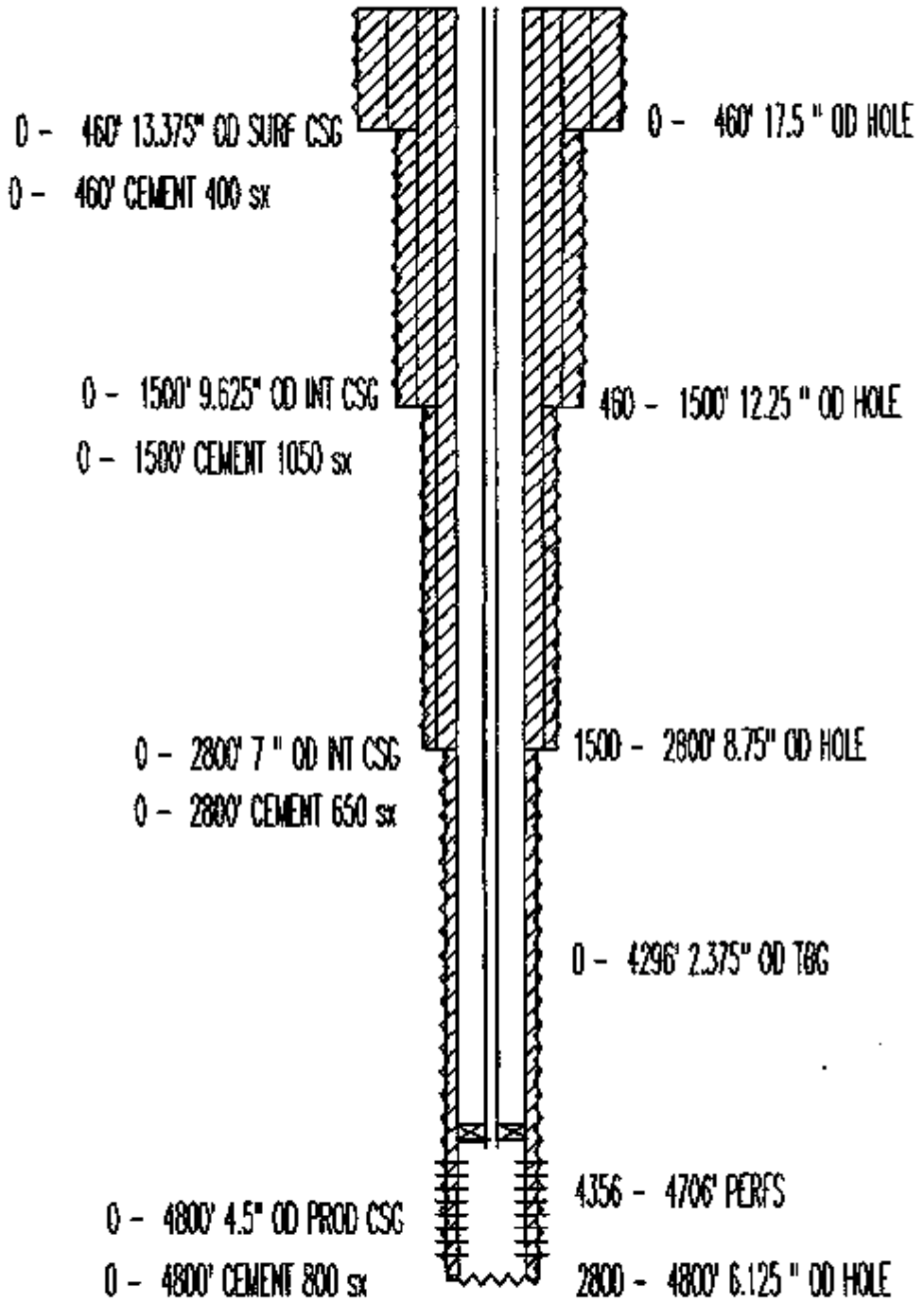

10 FSL & 1136 FWL
SEC 31 , TWN 17 S, RANGE 35 E
ELEVATION: 3982 GR
COMPLETION DATE: 05-02-79

D

Est. 6-21644

IDC WO: This workover will result in the recovery of new identifiable production and reserves that will not otherwise be recovered by the present completions.

RECOMMENDED REMEDIAL WORK

⟨11⟩ Form 7040 (M) E-20

Date 1-29-85

Lease Santa Fe Vacuum Unit Well No. 94 WIW TX. Work. Int. 50.27105%

Pool Vacuum Grayburg San Andres County Lea State New Mexico

All depths measured from _____ or _____ ft. from ground level.

TX. Comp. Date 4-17-79 @ T. D. 4750 I. P. Oil - Water - Gas - MCF

GOR - Hrs - Pump. Flow. Present T. D. 4750 PBTD Elevation _____ DF

DESCRIPTION OF PROSPECTIVE OR PAY ZONES

Name or Type of Zone	Top	Base	Remarks
Lower Grayburg in Hole 5	4343	4499	Present Injection Interval

CASING AND LINER RECORD

Size	Weight	Grade	Set At	Sacks Cement	Hole Size	Perf.	Remarks
13 3/8	48	H 40	350	400	17½		Cmt Circ
9 5/8	36	K 55	[illegible]	850	12¼		Cmt Circ
7	23	J 55	2725	150	8¾		Cmt Circ
5½	15.5	J 55	4500	800	7⅞	4343-4499	Cmt Circ

COMPLETION AND REMEDIAL WORK RECORD

Date	Production Test Before Oil	Water	GOR	Hrs	Type	Treatment Amount	From	To	Production Test After Oil	Water	GOR	Hrs
4-7-79	New Completion				Acid	2500	4343	4499	5	NVK		
7-23-83	233 BWIPD @ 2000 PSI				HCL	500	4343	4499	20 BW 22 @ 850 PSI			

Remarks: Present Perf: 4343, 63, 84, 4403, 1, 20, 29, 42, 4515, 22, 38, 45 52, 63, 67, 4122, 35, 42, 50, 60, 66 75, 85, 4199 (24 ft, 48 holes)
First workover since initiation of tertiary recovery

Present Allow. _____ Max. Allow. 869 PSIG Accum. Prod. 1,447,084 as of -84

Late 376 BWIPD pressure 850 PSIG (1-85)

Present Test: Oil - Water _____ Gas _____ GOR _____ Hrs _____ Pump. Flow.

Choke Size _____ Pressure _____ Tbg Pressure _____

Reasons for Remedial Work: To increase water injection in the subject well by an estimated 250 BWIPD by reperforating the present injection interval, cleaning out, and stimulating with acid. The predicted water injection increase is based

Petroleum Engineering Recommendations and Procedure:

1 Move in, rig up. Pull injection tubing and packer.

2 TIH w/ 3 7/8" bit and clean out to TD. Circulate hole clean and spot 5 drums 15% active Sodium Hypochlorite across perfs. POH

3 Perforate the following intervals w/2 JSPF: 4343, 65, 84, 4403, 11, 20, 29, 42, 4515, 22, 38,

TEXACO E&P INC
CENTRAL VACUUM U NO. 94 WIW
API# 3002525734000

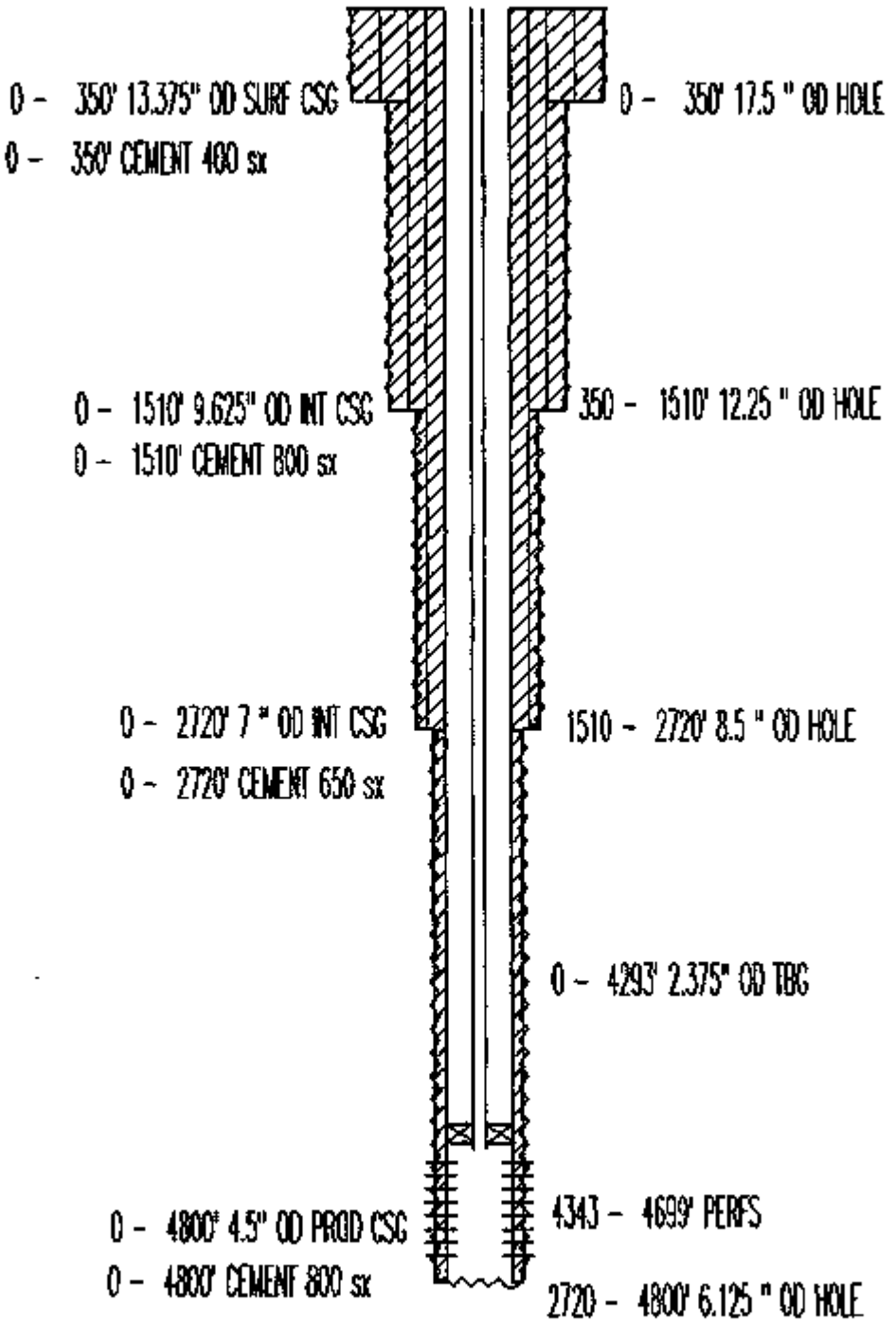

50 FSL & 2549 FEL
SEC 31 , TWN 17 S, RANGE 35 E
ELEVATION: 3989 GR
COMPLETION DATE: 04-12-79

RECOMMENDED REMEDIAL WORK Form PO-90 (M)

Date 09-16-92

Lease CENTRAL VACUUM UNIT Well No 96 Tx. Work. Int 44.92314

Pool VACUUM GRAYBURG SAN ANDRES County LEA State NEW MEXICO

All depths measured from DF or 10 ft. from ground level.

Tx. Comp. Date 08-10-38 @ T. D. 4675' I. P. Oil 151 Water 0 Gas 230 MCF

GOR 1525 Hrs 24 Pump Flow. Present T. D. 4705' PBTD Elevation 3987

DESCRIPTION OF PROSPECTIVE OR PAY ZONES

Name or Type of Zone	Top	Bottom	Remarks
GRAYBURG SAN ANDRES	4105'	4705'	OPEN HOLE

CASING AND LINER RECORD

Size	Weight	Grade	Set At	Sacks Cement	Hole Size	Perf.	Remarks
10 3/4"	N/A	N/A	257'	200	12 1/4"		CMT CIRC
7 5/8"	N/A	N/A	1536'	250	9 5/8"		CMT TOP @484' 60% FILL
5 1/2"	17#	N/A	4105'	200	6 3/4"		CMT TOP @2208' 60% FILL
4"	11.34#	FL4-S	4061'	425			CMT CIRC
					4 3/4"	4105'-4705'	OPEN HOLE

COMPLETION AND REMEDIAL WORK RECORD

	Production Test Before				Treatment				Production Test After			
Date	Oil	Water	GOR	Hrs	Type	Amount	From	To	Oil	Water	GOR	Hrs
08-10-38	NEW	WELL			NATURAL		4105'	4675'	151	0	1525	24
07-22-52	47	0	1336	6	REPAIR	CSG LEAK			50	0	1518	5.5
12-27-71	17	0		24	FRAC	30/45	4105'	4675'	86	17	985	24
05-20-75	0	0		24	15%ACID	1000 GALS	4105'	4675'	14	2	2265	24
12-02-75	19	0		24	REPAIR	CSG LEAK			105	12	876	24
01-03-77	20	2		24	REPAIR	CSG LEAK			100	5	850	24
08-08-80	12	8	472	24	20%NEFE	10000 GALS	4105'	4703'	39	238	1571	24
02-19-81	14	271	1571	24	REPAIR	CSG LEAK						
					15%NEFE	2550 GALS	4105'	4703'	20	132	1571	24
10-26-91	167	38	440	24p	15%NEFE	7000 GALS	4105'	4703'	169	148	440	24p

Remarks: ON 02/81, A 4" FLUSH JOINT CSG WAS SET INSIDE BAD 5 1/2" CSG

Present Allow _____ Max Allow. UNIT Accum. Prod. 1,442,000 as of 07-01-92

Present Test: Oil 167 Water 38 Gas _____ GOR _____ Hrs 24 Pump Flow.

Reasons for Remedial Work: SEE ATTACHED PAGE

Petroleum Engineering Recommendations and Procedure:
SEE ATTACHED PAGE

Area Manager

Reviewed and Approved By:
Engineer _____
Production Foreman _____
Area Engineer

Division
Approved _____
Date

TEXACO E&P INC.
CENTRAL VACUUM UNIT No. 96
API# 30025207540000

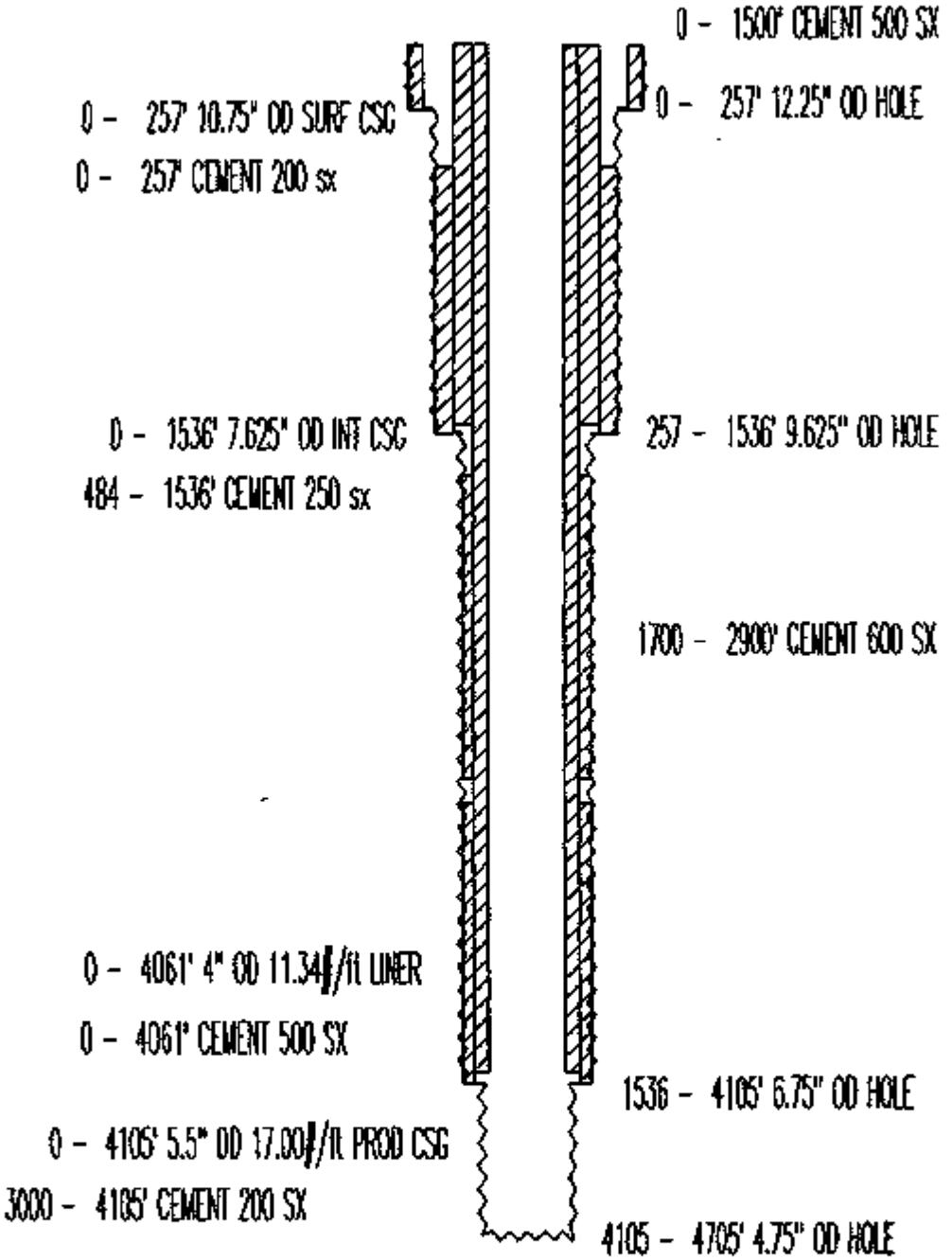

660 FNL & 1980 FEL
SEC 6, TWN 18 S, RANGE 35 E
ELEVATION: 3987' ES
COMPLETION DATE: 08-10-38
COMPLETION INTERVAL: 4105 - 4704
Former Texaco NM "R" NCT-1 #2

* EXP *

CVU No. 97 (P)
Form PO-90 (M)

RECOMMENDED REMEDIAL WORK

Date June 12, 1995

Lease Central Vacuum Unit Well No 97 Texaco GWI 44.923148 (39.3075 NRI)
Pool Vacuum Grayburg San Andres County LEA State NEW MEXICO
Legal Location: 760' FSL, 1980' FWL, Unit Letter N, Section 36, T-17-S, R-34-E, NMPM
Tx. Comp. Date 11-11-38 @ T. D. 4675 I. P. Oil 1272 Water 0 Gas 1000 MCF
GOR 786 Hrs 24 Flowing, Present T. D. 4725' Elevation 3978' GL kb = 12'

DESCRIPTION OF PROSPECTIVE OR PAY ZONES

Name or Type of Zone	Top	Bottom	Remarks
Vacuum Grayburg	4036'		Present producing interval
Vacuum San Andres	4338'		Present producing interval

CASING AND LINER RECORD

Size	Weight	Grade	Set At	Sacks Cement	Hole Size	Open Hole	Remarks
9-5/8"	36#	--	497'	250	11"		CMT CIRCULATED
7"	34#	--	4099'	700	8-3/4"		TOC @ 410', calc 60%
					6-1/8"	4099'-4725'	OPEN HOLE COMPLETION

COMPLETION AND REMEDIAL WORK RECORD

Production Test Before					Treatment				Production Test After			
Date	Oil	Water	GOR	Hrs	Type	Amount	From	To	Oil	Water	GOR	Hrs
11-11-38	Initial completion				NATURAL		4099'	4675'	1272	0	786	24f
05-21-81	277	69		24	DEEPEN	8,000 gl	4099'	4725'	745	51	448	24p
02-22-86	264	99	357	24	15%ACID	10,000 gl	4099'	4725'	446	371	357	24p
03-30-89	165	367	405	24	15%NEFE	8,650 gl	4099'	4725'	318	780	423	24p
11-05-91	75	467	747	24	15%XLA	8,000 gl	4099'	4725'	108	802	518	24p
8-13-93	47	496	851	24	15%NEFE	9,650 gl	4099'	4725'	66	584	606	24p

Remarks

Present Allow unit CUM. Prod. 1783 MBO, 982 MMCF, 1811 MBW as of 6/01/95

Present Test: 78 BOPD, 655 BWPD, 7 MCFPD, 90 GOR, 24/24 Hrs: sub pump

Reasons for Remedial Work:

Petroleum Engineering Procedure Summary:

1) Clean out to 4710' TD. Service sub pump.

2) Acidize open hole with 6,200 gals 15% NEFE HCL in three stages.

3) Scale squeeze three drums TH-793 scale inhibitor in two stages.

4) Run production equipment and return to production.

Area Manager

TEXACO E&P INC.
CENTRAL VACUUM UNIT No. 97
API# 30 025 03076

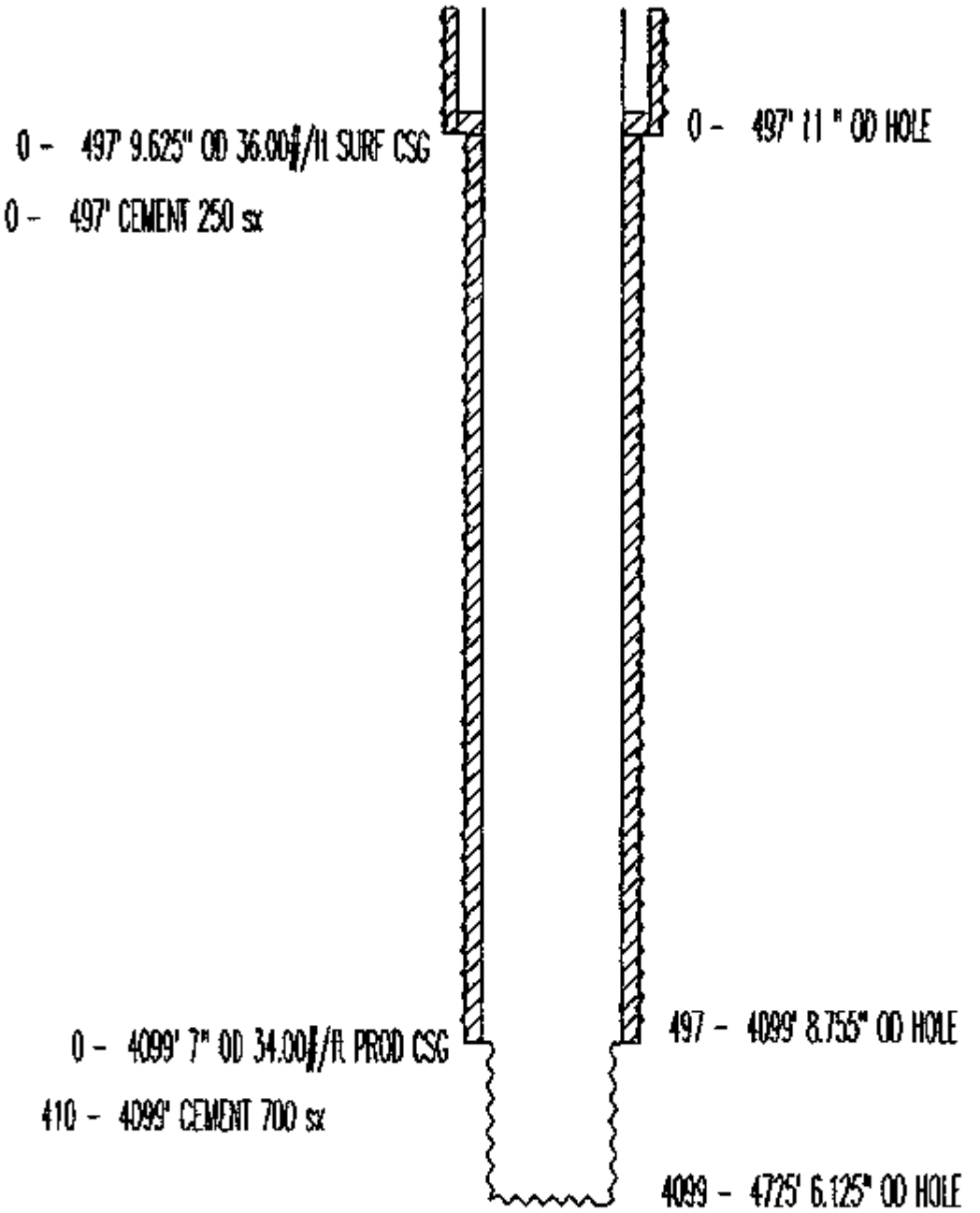

660 FNL & 1810 FWL
SEC 6 , TWN 18 S, RANGE 35 E
ELEVATION: 3988 ES
COMPLETION DATE: 11-11-38
***
COMPLETION INTERVAL: 4099 - 4725 (GRSA)
Former Marathon Worn State A/C-2 #2

* EXP *

CVU #99 WIW
Form PO-90 (M)

RECOMMENDED REMEDIAL WORK

Date February 11, 1995

Lease Central Vacuum Unit Well No 99 Texaco GWI 44.923148 (39.3075 NWI)

Pool Vacuum Grayburg San Andres County Lea State New Mexico

Legal Location: 1408' FNL, 1211' FWL, Unit Letter E, Section 6, T-18-S, R-35-E, Lea C.NMPM

Tx. Comp. Date 2-17-78 @ T. D. 4800 I. P. (Water Injection Well) 520 BWIPD @ vac

Started Injection 2-12-78 Present T. D. 4786' PBTD Elevation 3975' GL, KB = 10'

DESCRIPTION OF PROSPECTIVE OR PAY ZONES

Name or Type of Zone	Top	Bottom	Remarks
Vacuum Grayburg	4020'	4308'	Present Injection Interval
Vacuum San Andres	4309'		Present Injection Interval

CASING AND LINER RECORD

Size	Weight	Grade	Set At	Sacks Cement	Hole Size	Perf.	Remarks
9-5/8"	24#	K-55	360'	400	12-1/4"	-	Cmt circ to surf
7"	26#	P-110	2650'	1450	7-7/8"	-	Annl. SQZD w/ 1800 sx
4-1/2"	10.5#	K-55	4800'	800	6-1/4"	4315'-4712'	Cmt circ to surf

COMPLETION AND REMEDIAL WORK RECORD

Date	Injection Test Before Rate & Pressure	Hrs	Treatment Type	Amount	From	To	Injection Test After Rate & Pressure	
2-28-79	New Well		15% NEA	9,600 gl	4389'	4712'	520 BWIPD @ vac	24i
7-29-83	636 BWIPD @ 700 psi	Acid/	Bleach	500 gl	4389'	4712'	665 BWIPD @ 820#	24i
3-10-85	533 BWIPD @ 850 psi	24i	reperf.	5,000 gl	4315'	4712'	1000 BWIPD @ 725#	24i
7-16-94	0 BWIPD @ 1060 psi	24i	20%NEFE	5,000 gl	4315'	4712'	1188 BWIPD @ 1100#	24i

Present Allow 1095 psi Max Allow. _____ Accum. Inj. 4,054 MBWI as of 7/01/94

Present Test: 0 BWIPD @ 1060 PSI, Previous Test: 467 BWIPD @ 1040 PSI

Reasons for Remedial Work: CVU No. 99 stopped taking water and has an apparent packer failure. The team recommends cleaning out the well and pumping an acid/ surfactant job. Based on similar work on offset injection wells, a 450 bwipd rate should increase pattern production by 20 bopd and 10 mcf giving a four month payout.

Petroleum Engineering Recommendations and Procedure:

1) MIRU pulling unit. Install BOP. Release pkr. TOH with tbg and packer. Inspect and repair as necessary.

2) TIH with 3-7/8" bit & clean out to PBTD 4786' (perfs 4315'-4712'). If excessive polymer residue is encountered, spot oxidizer and clean out.

3) GIH with 4-1/2" treating packer. Set packer and test backside to 500 psi.

4) Acidize formation with 6000 gals 20% NEFE HCL w/ 3% TW-425 at 4-5 BPM using 4500# rock salt and 80 ball sealers as diverting agents. Pump as follows:
   a) Establish pump in rate.
   b) Pump 1500 gals acid w/ 20 ball sealers.
   c) Pump 1500 lbs rocksalt in 12 Bbls gelled brine.
   d) Pump 1500 gals acid w/ 20 ball sealers.
   e) Repeat steps c & d three times adjusting block as necessary.
   f) Flush to bottom perf with fresh water.
   g) SI one hour. Swab rest of day. POH.

5) Test inj tbg while running in hole. Set pkr at +/- 4270'. Load backside with pkr fluid and test. Put on injection.

6) Run step rate test and injection profile after rate stabilizes.

TEXACO E&P INC
CENTRAL VACUUM U NO. 99 WIW
API# 30025257100000

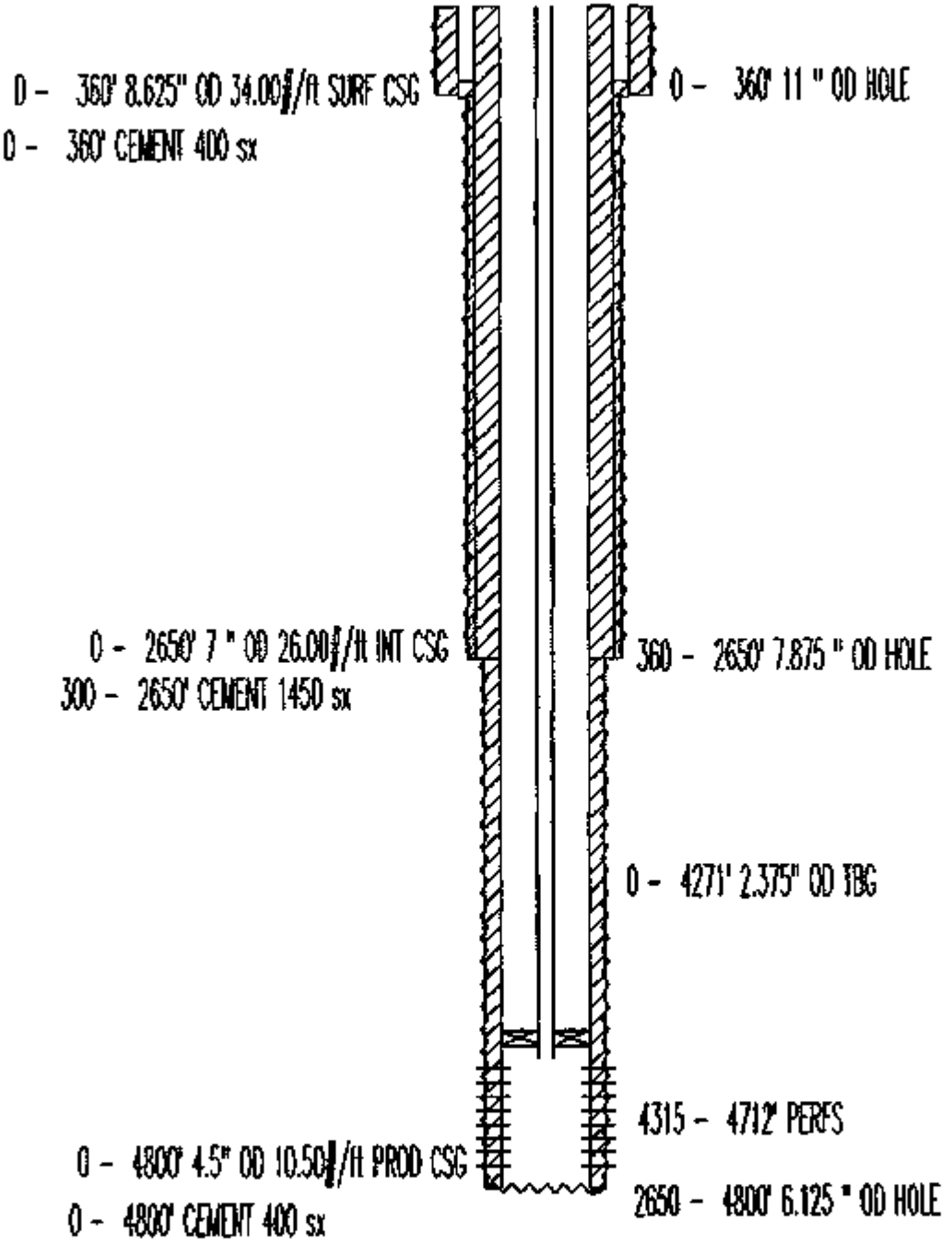

1408 FNL & 1211 FWL
SEC 6 , TWN 18 S, RANGE 35 E
ELEVATION: 3981 GR
COMPLETION DATE: 02-12-78

RECOMMENDED REMEDIAL WORK Form PO-90 (M)

Date 11-4-93

Lease Central Vacuum Unit Well No 100 Texaco GWI 44.923149 (39.30775 NWI)

Pool Vacuum Grayburg San Andres County Lea State New Mexico

(1 depths measured from KB or 12 ft. from ground level.

Tx. Comp. Date 5-26-79 @ T. D. 4800 I. P. Oil as SI WIW Water - Gas - MCF

GOR - Hrs - Flow Pump. Present T. D. 4760' Elevation 3972' DF

DESCRIPTION OF PROSPECTIVE OR PAY ZONES

Name or Type of Zone	Top	Bottom	Remarks
Vacuum Grayburg San Andres	4338'	4719'	Present Injection Interval

CASING AND LINER RECORD

Size	Weight	Grade	Set At	Sacks Cement	Hole Size	Perf.	Remarks
13 3/8"	48#	H-40	355'	400	17 1/2"	-	Cmt circ to surf
9 5/8"	32#	H-40	1456'	800	12 1/4"	-	Cmt circ to surf
7"	23#	K-55	2740'	650	8 3/4"	-	Cmt circ to surf
4 1/2"	10.5#	K-55	4800'	800	6 1/8"	4338'-4719'	Cmt circ to surf

COMPLETION AND REMEDIAL WORK RECORD

Production Test Before					Treatment				Production Test After			
Date	Oil	Water	GOR	Hrs	Type	Amount	From	To	Oil	Water	GOR	Hrs
5-26-79	New Well				15%NEA	8000 gals	4338'	4719'		SI WIW		
-05-79		SI WIW			Start WI		4338'	4719'		NA		
a-02-83	490 BWIPD @ 720 psi			24I	Bleach/Acid 500 gl		4338'	4719'	490 BWIPD @ 720 psi			24I
2-14-89	365 BWIPD @ 1025 psi			24I	ClO2	1000 gals						
					20%NEFE	1300 gals						
					N2	25000 SCF	4338'	4719'	481 BWPD @ 1025 psi			24I

PERFS: 4338, 46, 54, 70, 90, 98, 4408, 38, 43, 48, 55, 61, 78, 89, 97, 4514, 24, 36, 44, 55, 98, 4630, 49, 54, 67, 73, 83, 95, 4707, 14, 19 (31 Intervals, 62 holes)

Present

Allow 1700 psi Max Allow. - Accum. Inj. 2400 MBWI as of 12/92 Present

Test: 0 BBL Water @1000 psi Gas - GOR - Hrs 24 Inj xxxx.

Reasons for Remedial Work: See Attached Page

Petroleum Engineering Recommendations and Procedure:

See Attached Page

TEXACO E&P INC
CENRAL VACUUM U NO. 100 WIW
API# 30025257110000

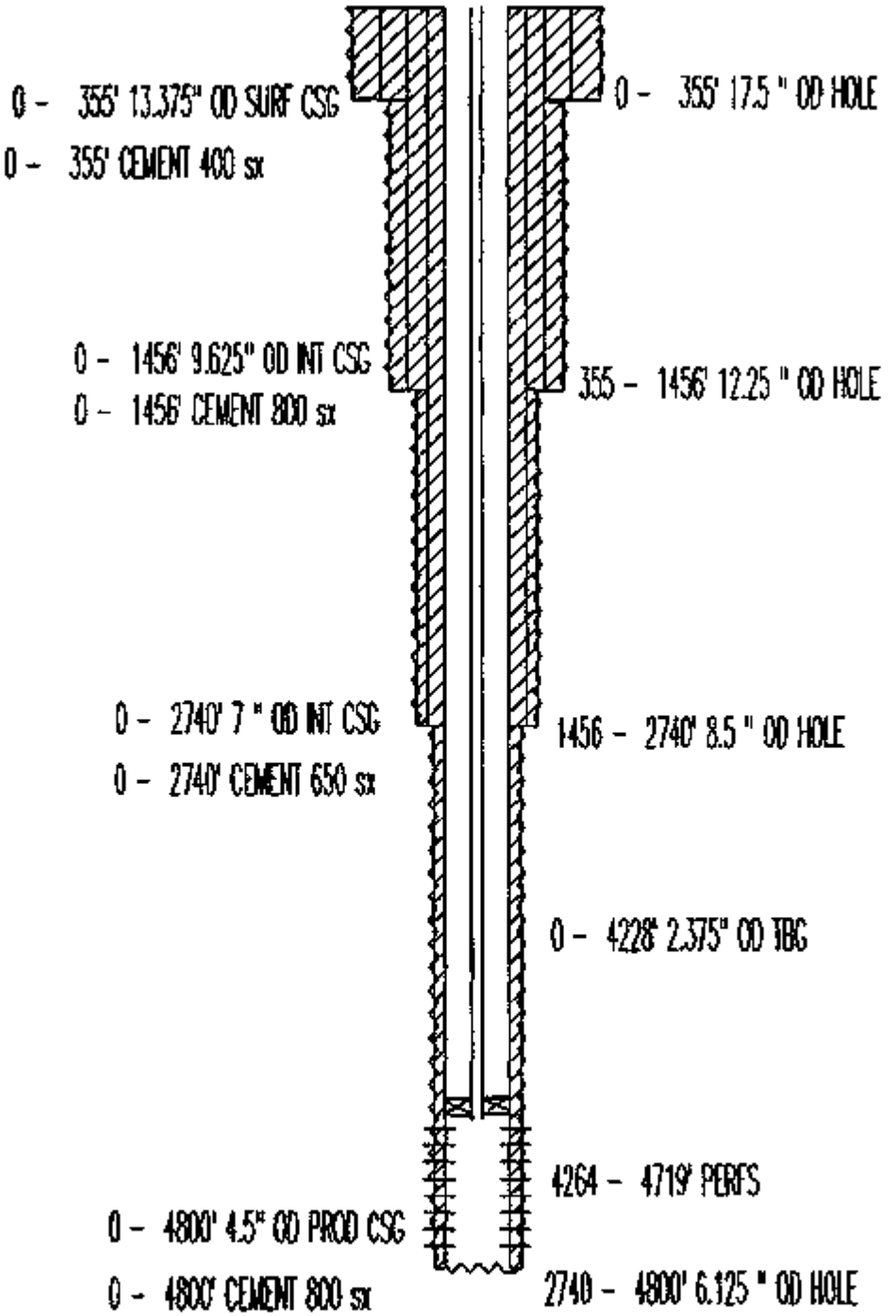

1372 FNL & 2544 FWL
SEC 6 , TWN 18 S, RANGE 35 E
ELEVATION: 3972 GR
COMPLETION DATE: 06-26-79

DISTRIBUTION
SANTA FE
FILE
U.S.G.S.
LAND OFFICE
OPERATOR

NEW MEXICO OIL CONSERVATION COMMISSION
WELL COMPLETION OR RECOMPLETION REPORT AND LOG

Form C-105
Revised 1-1-65

Indicate Type of Lease: State [X] Fee [ ]

State Oil & Gas Lease No.: B-1306

1a. TYPE OF WELL: Oil Well [ ] Gas Well [ ] Dry [ ] Other: Water Injection

1b. TYPE OF COMPLETION: New Well [X] Work Over [ ] Deepen [ ] Plug Back [ ] Diff. Resvr. [ ] Other

7. Unit Agreement Name: Central Vacuum Unit

8. Farm or Lease Name: Central Vacuum Unit

2. Name of Operator: TEXACO Inc.

9. Well No.: 101

3. Address of Operator: P. O. Box 728 - Hobbs, New Mexico 88240

10. Field and Pool, or Wildcat: Vacuum Grayburg-San Andres

4. Location of Well: Unit Letter G, Located 1410 Feet From The North Line and 1336 Feet From The East Line of Sec. 6, Twp. 18-S, Rge. 35-E, NMPM

12. County: Lea

15. Date Spudded: 5-12-79
16. Date T.D. Reached: 5-25-79
17. Date Compl. (Ready to Prod.): 6-7-79
18. Elevations (DF, RKB, RT, GR, etc.): 3976' (GR)
19. Elev. Cashinghead: 3976'

20. Total Depth: 4800'
21. Plug Back T.D.: 4764
22. If Multiple Compl., How Many:
23. Intervals Drilled by: →
Rotary Tools: 0-4800'
Cable Tools: -0-

24. Producing Interval(s), of this completion — Top, Bottom, Name: 4366-4696' Grayburg-San Andres

25. Was Directional Survey Made: No

26. Type Electric and Other Logs Run: Gamma Ray - Compensated Neutron

27. Was Well Cored: No

28. CASING RECORD (Report all strings set in well)

CASING SIZE	WEIGHT LB./FT.	DEPTH SET	HOLE SIZE	CEMENTING RECORD	AMOUNT PULLED
13-3/8"	48#	355'	17-1/2"	400 sx	-0-
9-5/8"	32#	1465'	12-1/4"	800 sx	-0-
7"	23#	2740'	8-3/4"	650 sx	-0-
4-1/2"	10.5#	4800'	6-1/8"	800 sx	-0-

29. LINER RECORD

SIZE	TOP	BOTTOM	SACKS CEMENT	SCREEN

30. TUBING RECORD

SIZE	DEPTH SET	PACKER SET
2-3/8"	4319'	4319'

31. Perforation Record (Interval, size and number): Perf. 4-1/2" csg w/2 JSPF @ 4366,70,74,83,93,98,4404,14,21,27, 30,38,58,80,92,4502,07,10,16,20,40,64,69,79,85, 96,4602,08,16,39,46,54,60,88 & 4695'.

32. ACID, SHOT, FRACTURE, CEMENT SQUEEZE, ETC.

DEPTH INTERVAL	AMOUNT AND KIND MATERIAL USED
4366-4696'	8000 gals. 15% NE Acid
12/89 " "	A/500 gal 20% + 23 mscf N_2
2/91 " "	A/300 gal 15%

33. PRODUCTION

Date First Production: Water Injection Well
Production Method (Flowing, gas lift, pumping - Size and type pump): - No Potential Test
Well Status (Prod. or Shut-in):

Date of Test	Hours Tested	Choke Size	Prod'n. For Test Period →	Oil — Bbl.	Gas — MCF	Water — Bbl.	Gas—Oil Ratio

Flow Tubing Press.	Casing Pressure	Calculated 24-Hour Rate →	Oil — Bbl.	Gas — MCF	Water — Bbl.	Oil Gravity — API (Corr.)

34. Disposition of Gas (Sold, used for fuel, vented, etc.):

Test Witnessed By:

35. List of Attachments: Well Completed Shut-In Water Injection 6-7-79

I hereby certify that the information shown on both sides of this form is true and complete to the best of my knowledge and belief.

SIGNED: [signature] TITLE: Asst. District Supt. DATE: 6-11-79

TEXACO E&P INC
CENTRAL VACUUM U NO. 101 WIW
API# 30025257120000

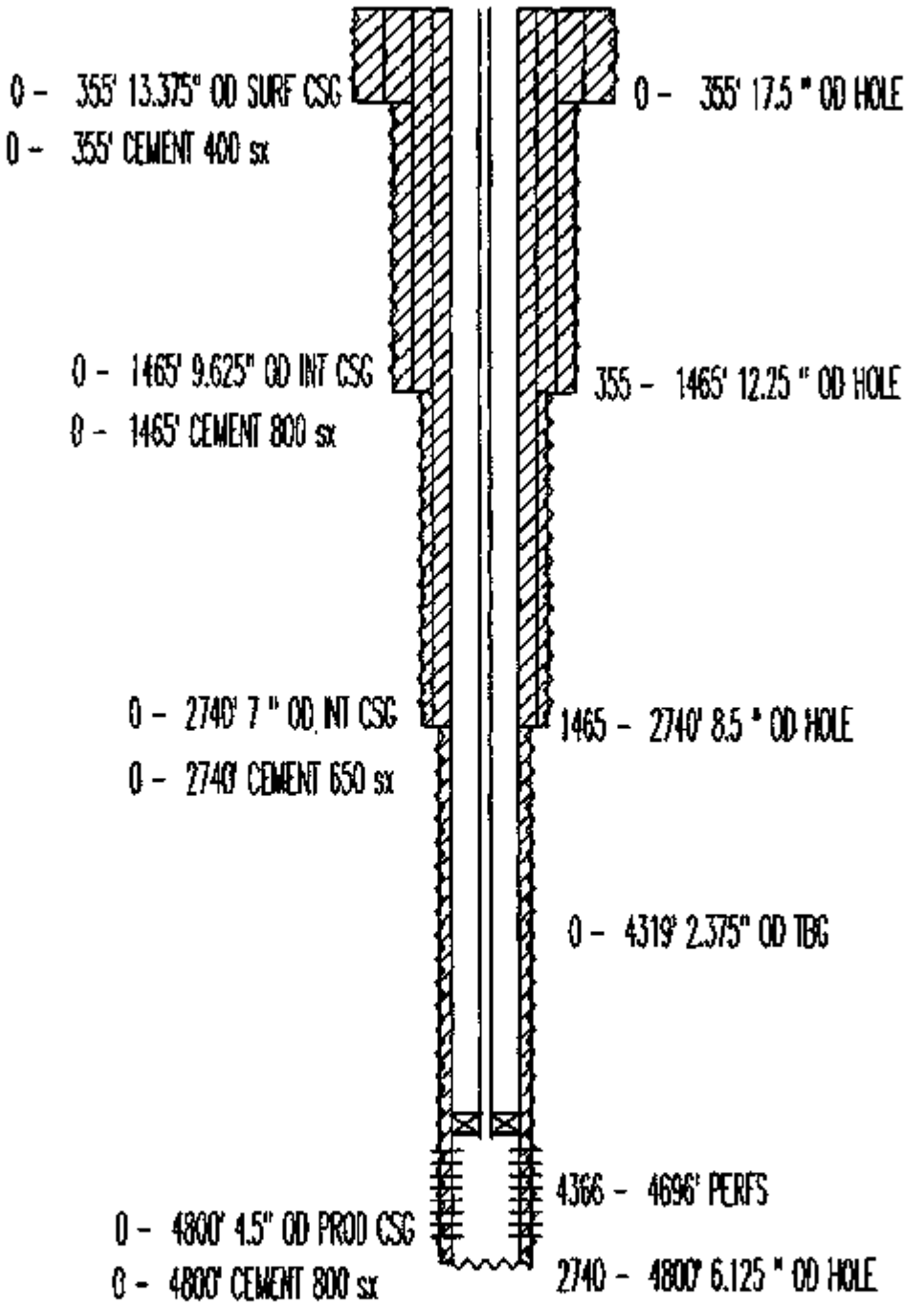

1410 FNL & 1336 FEL
SEC 6 , TWN 18 S, RANGE 35 E
ELEVATION: 3976 GR
COMPLETION DATE: 06-07-79

* EXP *

CVU No. 103 (P)
Form PO-90 (M)

RECOMMENDED REMEDIAL WORK

Date June 22, 1995

Lease Central Vacuum Unit Well No 103 Texaco GWI 44.923144% (39.3075 NWI)

Pool Vacuum Grayburg San Andres County Lea State New Mexico

Legal Location: 1980' FNL, 1980' FEL, Unit Letter G, Section 6, T-18-S, R-35-E, NMPM

Tx. Comp. Date 11-05-39 @ T. D. 4710 I. P. Oil 1332 Water 0 Gas 1532 MCF

GOR 1150 Hrs 24 Flowing, Present T. D. 4710' Elevation 3961' GL KB = 12'

DESCRIPTION OF PROSPECTIVE OR PAY ZONES

Name or Type of Zone	Top	Bottom	Remarks
Vacuum Grayburg	~4100'		Present producing interval
Vacuum San Andres	~4350'		Present producing interval

CASING AND LINER RECORD

Size	Weight	Grade	Set At	Sacks Cement	Hole Size	Open Hole	Remarks
8-5/8"	28#	LW	1515'	300	10"		TOC @ surf., calc.
5-1/2"	17#	smls	4070'	200	6-3/4"		TOC @~3200'/ 400'
					4-3/4"	4070'-4710'	

COMPLETION AND REMEDIAL WORK RECORD

Production Test Before					Treatment				Production Test After			
Date	Oil	Water	GOR	Hrs	Type	Amount	From	To	Oil	Water	GOR	Hrs
11-05-39	Initial completion					natural	4070'	4710'	1322	0	1150	24f
12-16-69	30	3	--	SQZ casing, frac 30/40			4070'	4710'	78	16	1410	24p
8-04-77	0	404	--	SQZ	casing	w/ 100 sx	2208'	2100'	38	23	1800	24p
10-03-80	56	41	1385	24p	20%NEFE	10,000 gl	4070'	4710'	101	45	1385	24p
3-18-86	84	20	505	24p	15%NEFE	10,000 gl	4070'	4710'	110	30	505	24p
5-08-93	75	113	7	24p	A/ frac	4- 30/75	4070'	4710'	82	47	366	24p

Remarks: holes in casing @ 2100' squeezed w/ 100 sx, 12/69, 100 sx @ 2208'on 8-4-77, annulus SQZD w/ 450 sx on 10-28-80, TOC @ 400' by T.S.

Present Allow unit CUM. Prod. MBO, MMCF, MBW as of 5/01/95

Present Test: 95 BOPD, 8 BWPD, 7 MCFPD, 74 GOR, 21/24 Hrs: pumping

Reasons for Remedial Work:

Petroleum Engineering Recommendations and Procedure:

(see following pages)

TEXACO E&P INC
CENTRAL VACUUM UNIT No. 103
API# 3002503091

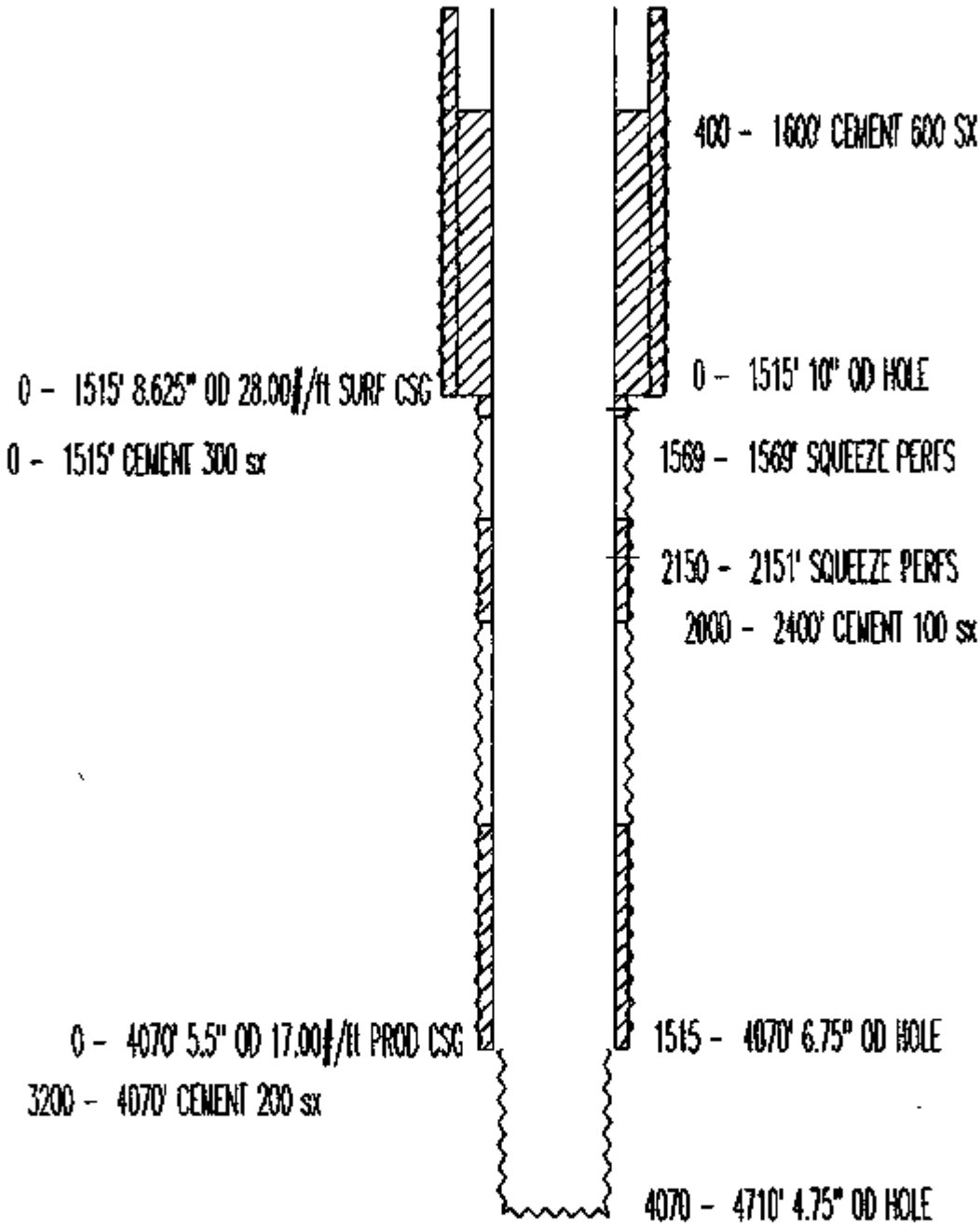

1980 FNL & 1980 FEL
SEC 6 , TWN 18 S, RANGE 35 E
ELEVATION: 3978 GR
COMPLETION DATE: 11-05-39
***
COMPLETION INTERVAL: 4070 - 4710 ( )
Former Texaco NM "R" NCT-1 #5

* EXP *

CVU No. 104 (P)
Form PO-90 (M)

RECOMMENDED REMEDIAL WORK

Date February 11, 1995

Lease Central Vacuum Unit Well No 104 Texaco GWI 44.923144% (39.3075 NWI)
Pool Vacuum Grayburg San Andres County Lea State New Mexico
Legal Location: 1980' FNL, 1748' FWL, Unit Letter F, Section 6, T-18-S, R-35-E, NMPM
Tx. Comp. Date 10-11-39 @ T. D. 4650 I. P. Oil 1080 Water 0 Gas 750 MCF
GOR 694 Hrs 24 Flowing, Present T. D. 4717' Elevation 3977' GL KB = 11'

DESCRIPTION OF PROSPECTIVE OR PAY ZONES

Name or Type of Zone	Top	Bottom	Remarks
Vacuum Grayburg	~4025'		Present producing interval
Vacuum San Andres	~4300'		Present producing interval
			(no logs run, tops not recorded)

CASING AND LINER RECORD

Size	Weight	Grade	Set At	Sacks Cement	Hole Size	Perf.	Remarks
9-5/8"	19.5#	--	480'	200	11"		TOC @ surf., calc.
5-1/2"	17#	--	4085'	800	8-1/4"		TOC @~1025'/ surf.
					4-3/4"	4085'-4717'	open hole

holes in casing 808'-948' squeezed w/ 450 sx, circulated to surface: 12-08-80

COMPLETION AND REMEDIAL WORK RECORD

Production Test Before					Treatment				Production Test After			
Date	Oil	Water	GOR	Hrs	Type	Amount	From	To	Oil	Water	GOR	Hrs
10-11-39	Initial completion					natural	4085'	4650'	1080	0	750	24f
12-16-80	111	25	--	SOZ	casing	w/ 450 sx	808'	952'	52	33	0	24p
1-21-81	36	6	4000	24p	deepen	3,000 gl	4085'	4717'	206	98	1786	24p
6-04-85	191	20	--	24p	15%NEFE	10,000 gl	4085'	4717'	227	178	--	24p
9-15-94	123	113	325	24p	15%NEFE	2,000 gl	4085'	4717'	139	161	288	24p

Present Allow unit CUM. Prod. 1501 MBO, 1654 MMCF, 318 MBW as of 8/01/94

Present Test: 123 BOPD, 113 BWPD, 40 MCFPD, 325 GOR, 22/24 Hrs: pumping

Reasons for Remedial Work: The oil and water production in the subject well is declining at 18% and this well is a possible candidate for future fracture stimulation. The team recommends cleaning out and acidizing the open hole and running neutron and production logs. Based on similar work on offset wells, this work should increase production by 20 bopd giving a 4 month payout.

Petroleum Engineering Recommendations and Procedure:

(see following pages)

TEXACO E&P INC
CENTRAL VACUUM UNIT No. 104
API# 3002503078

0 - 942' CEMENT 450 SX

0 - 480' 9.625" OD 19.50#/ft SURF CSG

0 - 480' CEMENT 200 sx

0 - 480' 11" OD HOLE

1980 FNL & 1728 FWL
SEC 6 , TWN 18 S, RANGE 35 E
ELEVATION: 3977 GR
COMPLETION DATE: 10-11-39
****
COMPLETION INTERVAL: 4110 - 4650 ( )
IP: 1060 BOPD, 500 MCFD, 0 BWPD (FLOWING)
****
Former Warn Slide A/C-2 #4

480 - 4085' 8.25" OD HOLE

0 - 4085' 5.5" OD 17.00#/ft PROD CSG

1015 - 4085' CEMENT 800 sx

4085 - 4717' 4.75 " OD HOLE

RECOMMENDED REMEDIAL WORK

Date February 10, 1995

Lease Central Vacuum Unit Well No 106 Texaco GWI 44.923148 (39.3075 NWI)

Pool Vacuum Grayburg San Andres County Lea State New Mexico

Legal Location: 2520' FNL, 1040' FWL, Unit Letter E, Section 6, T-18-S, R-35-E, NMPM

Tx. Comp. Date 2-28-79 @ T. D. 4800 I. P. (Water Injection Well) 2377 BWIPD @ vac

Started Injection 8-21-79 Present T. D. 4764' PBTD Elevation 3980' GL, KB = 10'

DESCRIPTION OF PROSPECTIVE OR PAY ZONES

Name or Type of Zone	Top	Bottom	Remarks
Vacuum Grayburg	4134'	4435'	Unitized Pay Zone
Vacuum San Andres	4436'	4800'	Present Injection Interval

CASING AND LINER RECORD

Size	Weight	Grade	Set At	Sacks Cement	Hole Size	Perf.	Remarks
13 3/8"	48#	H-40	350'	400	17 1/2"	-	Cmt circ to surf
9 5/8"	36#	K-55	1500'	800	12 1/4"	-	Cmt circ to surf
7"	23#	K-55	2709'	650	8 3/4"	-	Cmt circ to surf
4 1/2"	10.5#	k-55	4800'	800	7 7/8"	4352'-4720'	Cmt circ to surf

COMPLETION AND REMEDIAL WORK RECORD

Date	Injection Test Before Rate & Pressure	Hrs	Treatment Type	Amount	From	To	Injection Test After Rate & Pressure	
2-28-79	New Well		15% NEA	9600 gals	4352'	4720'	2377 BWIPD @ vac	24i
7-30-83	582 BWIPD @ 640 psi	Acid/	Bleach	500 gals	4352'	4720'	797 BWIPD @ 690 #	24i
5-08-85	888 BWIPD @ 880 psi	24i	reperf.	10000 gals	4352'	4720'	1620 BWIPD @ 810 #	24i
11-20-93	230 BWIPD @ 900 psi	24i	reperf.	9000 gals	4238'	4720'	1570 BWIPD @ 910 #	24i

Present Allow 940 psi Max Allow. _____ Accum. Inj. 2,443 MBWI as of 7/01/94

Present Test: 0 BWIPD @ 714 PSI, Previous Test: 578 BWIPD @ 1300 PSI

Reasons for Remedial Work: CVU No. 106 is not taking water so the team recommends cleaning out the well and pumping an acid/ surfactant job. Based on similar work on offset injection wells, a 450 bwipd rate should increase pattern production by 20 bopd and 10 mcf giving a four month payout.

Petroleum Engineering Recommendations and Procedure:

1) MIRU pulling unit. Install BOP. Release pkr. TOH with tbg and packer. Inspect and repair as necessary.

2) TIH with 3-7/8" bit & clean out to PBTD 4765' (perfs 4238'-4720').

3) GIH with 4-1/2" treating packer. Set packer and test backside to 500 psi.

4) Acidize formation with 6000 gals 20% NEFE HCL w/ 3% TW-425 at 4-5 BPM using 4500# rock salt and 80 ball sealers as diverting agents. Pump as follows:
   a) Establish pump in rate.
   b) Pump 1500 gals acid w/ 20 ball sealers.
   c) Pump 1500 lbs rocksalt in 12 Bbls gelled brine.
   d) Pump 1500 gals acid w/ 20 ball sealers.
   e) Repeat steps c & d three times adjusting block as necessary.
   f) Flush to bottom perf with fresh water.
   g) SI one hour. Swab rest of day. POH.

5) Test inj tbg while running in hole. Set pkr at +/- 4175'. Load backside with pkr fluid and test. Put on injection.

6) Run step rate test and injection profile after rate stabilizes.

TEXACO INC
CENTRAL VACUUM U NO. WI-106
API# 3002525796

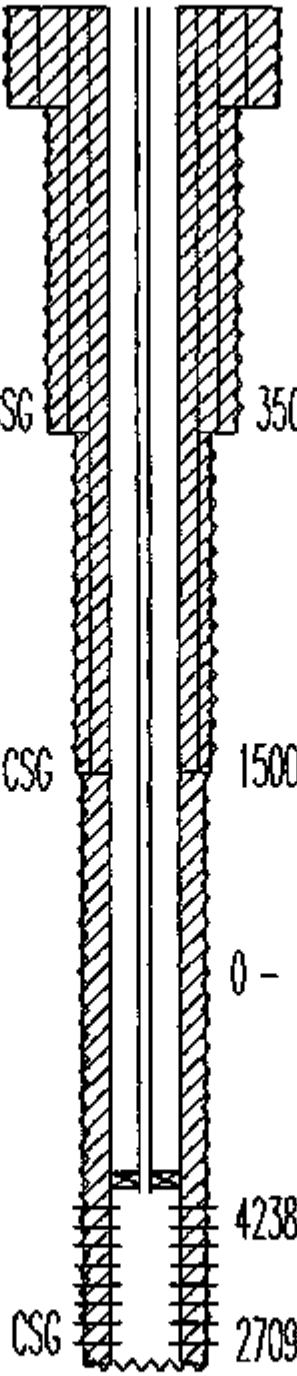

- 350' 13.375" OD 48.00#/ft SURF CSG
  0 - 350' CEMENT 400 sx
- 0 - 350' 17.5 " OD HOLE
- 0 - 1500' 9.625" OD 36.00#/ft INT CSG
  0 - 1500' CEMENT 800 sx
- 350 - 1500' 12.25 " OD HOLE
- 0 - 2709' 7 " OD 23.00#/ft INT CSG
  0 - 2709' CEMENT 650 sx
- 1500 - 2709' 8.75" OD HOLE
- 0 - 4183' 2.375" OD TBG
- 4238 - 4720' PERFS
- 0 - 4800' 4.5" OD 10.50#/ft PROD CSG
  0 - 4800' CEMENT 800 sx
- 2709 - 4800' 7.875" OD HOLE

2520 FNL & 1040 FWL
SEC 6 , TWN 18 S, RANGE 35 E
ELEVATION: 3972 GR
COMPLETION DATE: 02-28-78

RECOMMENDED REMEDIAL WORK Form PO-90 (M)

Date 06-19-91

Lease CENTRAL VACUUM UNIT Well No 107 Tx. Work. Int 44.92314

Pool VACUUM GRAYBURG SAN ANDRES County LEA State NEW MEXICO

All depths measured from KB or 12 ft. from ground level.

Tx. Comp. Date 6-28-79 @ T. D. 4800' I. P. Oil WIW Water Gas MCF

GOR Hrs Pump Flow. Present T. D. PBTD 4750 Elevation 3978'

DESCRIPTION OF PROSPECTIVE OR PAY ZONES

Name or Type of Zone	Top	Bottom	Remarks
GRAYBURG SAN ANDRES	4330'	4710'	PERFORATED INTERVAL
GRAYBURG SAN ANDRES	4244'	4710'	PROPOSED INTERVAL

CASING AND LINER RECORD

Size	Weight	Grade	Set At	Sacks Cement	Hole Size	Perf.	Remarks
13 3/8"	48#	K-55	354'	400	17 1/2"		CEMENT CIRCULATED
9 5/8"	32#	K-55	1510'	800	12 1/4"		CEMENT CIRCULATED
7"	23#	K-55	2720'	650	8 3/4"		CEMENT CIRCULATED
4 1/2"	10.5#	K-55	4800'	800	6 1/8"	4330'-4710'	CEMENT CIRCULATED

COMPLETION AND REMEDIAL WORK RECORD

Production Test Before					Treatment				Production Test After			
Date	Oil	Water	GOR	Hrs	Type	Amount	From	To	Oil	Water	GOR	Hrs
06-28-79	INITIAL COMPLETION				15%NEFE	10000 GALS	4330'	4710'	WIW			
12-14-89	48 BWPD @ 866 psi				COIL	TUBING			21 BWPD @ 860 psi			

Remarks:

Present Allow Max Allow. Accum. Prod. as of

Present Test: Oil Water Gas GOR Hrs Pump Flow.

PRESENT INJECTION: 49 BWPD @ 860 PSI

Reasons for Remedial Work: We recommend that the subject well be additionally perforated in t grayburg and acidized. This same interval has been found to be productive in offset wells. CVU #135 was perforated in the grayburg and acidized. Injection prior to workover was

Petroleum Engineering Recommendations and Procedure:

SEE ATTACHED PAGE

TEXACO INC
CENTRAL VACUUM U NO. W1-107
API# 300252582

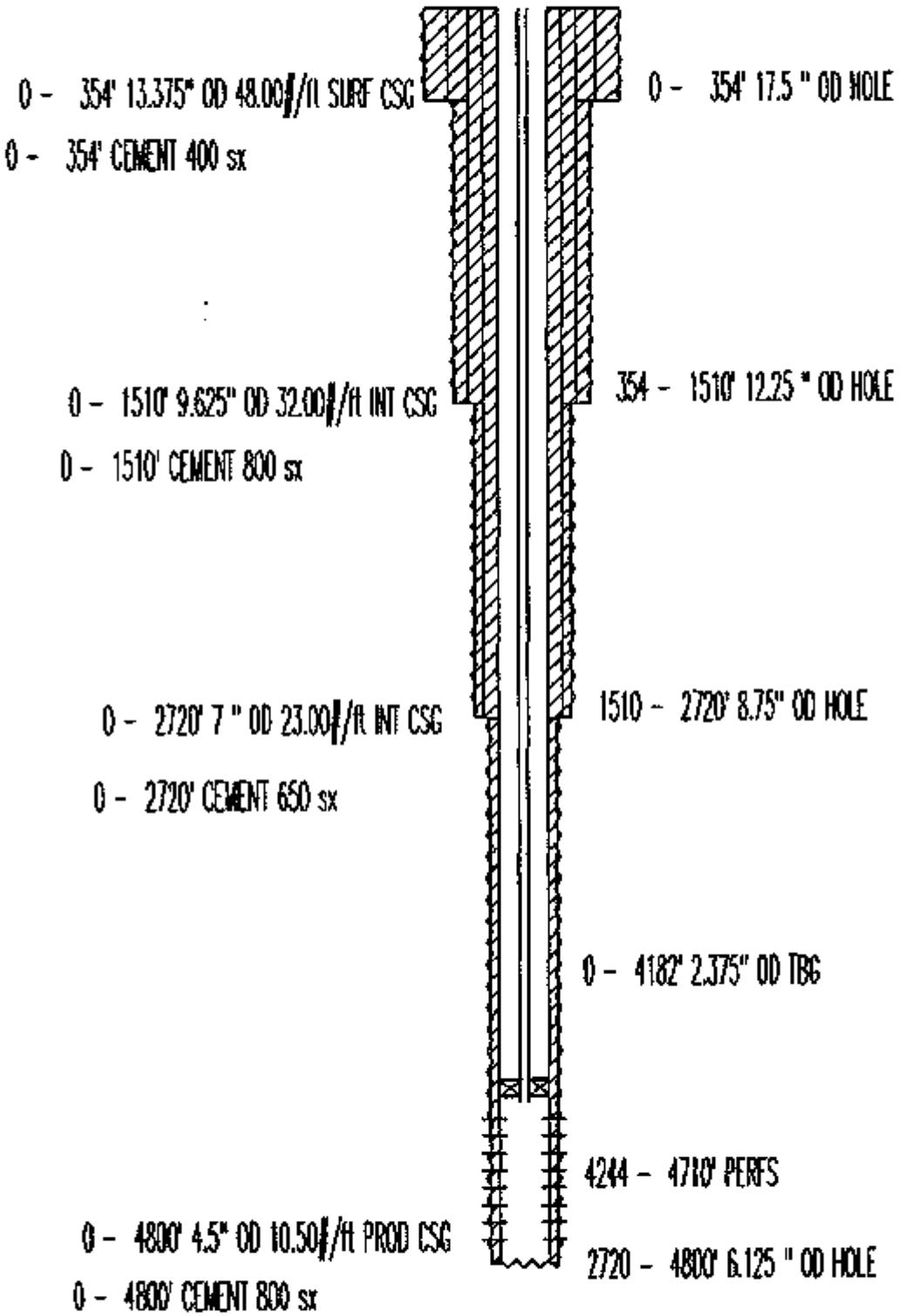

2450 FNL & 2632 FEL
SEC 6 , TWN 18 S, RANGE 35 E
ELEVATION: 3978 GR
COMPLETION DATE: 06-28-79

* EXP *

CVU #108 WIW
Form PO-90 (M)

RECOMMENDED REMEDIAL WORK

Date February 10, 1995

Lease Central Vacuum Unit Well No 108 Texaco GWI 44.923148 (39.3075 NWI)

Pool Vacuum Grayburg San Andres County Lea State New Mexico

Legal Location: 2630' FNL, 1480' FEL, Unit Letter G, Section 6, T-18-S, R-35-E, Lea C.NMPM

Tx. Comp. Date 6-21-79 @ T. D. 4800 I. P. (Water Injection Well) 1096 BWIPD @ vac

Started Injection 8-20-79 Present T. D. 4757' PBTD Elevation 3977' GL, KB = 12'

DESCRIPTION OF PROSPECTIVE OR PAY ZONES

Name or Type of Zone	Top	Bottom	Remarks
Vacuum Grayburg	4118'		Present Injection Interval
Vacuum San Andres	4406'		Present Injection Interval

CASING AND LINER RECORD

Size	Weight	Grade	Set At	Sacks Cement	Hole Size	Perf.	Remarks
13-3/8"	48#	K-55	355'	400	17-1/2"	-	Cmt circ to surf
9-5/8"	32#	K-55	1520'	800	12-1/4"	-	Cmt circ to surf
7"	23#	K-55	2721'	650	8-3/4"	-	Cmt circ to surf
4-1/2"	10.5#	K-55	4800'	800	7-7/8"	4320'-4732'	Cmt circ to surf

COMPLETION AND REMEDIAL WORK RECORD

Date	Injection Test Before Rate & Pressure	Hrs	Treatment Type	Amount	From	To	Injection Test After Rate & Pressure	
8-20-79	New Well		15% NEA	11,000 gl	4417'	4732'	1096 BWIPD @ vac	24i
2-12-80	0 BWIPD @ 80 psi		A/ frac	3- 52/108	4417'	4732'	600 BWIPD @ vac	24i
10-06-92	15 BWIPD @ 1350 psi	Acid/	reperf	13,300 gl	4320'	4732'	350 BWIPD @ 1300#	24i

Present Allow 1350 psi Max Allow. Accum. Inj. 396 MBWI as of 1/01/95

Present Test: SI BWIPD @ 0 PSI, Previous Test: 97 BWIPD @ 1300 PSI

Reasons for Remedial Work: CVU No. 108 was shut-in after a braden head survey indicated that the intermediate casing strings were communicated. The NMOCD has requested that the casing leak, which appears to be near the surface, be repaired. The CVU team recommends cleaning out the well and pumping a small acid/ surfactant job. Based on similar work on offset injection wells, restoring the 300 bwipd rate should support pattern production at 26 bopd and 6 mcf giving a four month payout.

Petroleum Engineering Recommendations and Procedure:

1) MIRU pulling unit. Install BOP. Release pkr. TOH with tbg and packer. Inspect and repair as necessary. TIH, set RBP at 1000'. Spot sand on top. Tie into intermediate casing valves and establish circulation if possible. Pump 50 sy class 'C' Ultrafine and circulate back to the surface. Shut casing valve and squeeze remaining cement down casing annulus if possible. GIH, wash sand off RBP and retrieve.

2) TIH with 3-7/8" bit & clean out to PBTD 4757' (perfs 4320'-4732').

3) GIH with 4-1/2" treating packer. Set packer and test backside to 500 psi.

4) Acidize formation with 6000 gals 20% NEFE HCL w/ 3% TW-425 at 4-5 BPM using 4500# rock salt and 120 ball sealers as diverting agents (106 perforations). Pump as follows:
   a) Establish pump in rate.
   b) Pump 2000 gals acid w/ 40 ball sealers.
   c) Pump 1500 lbs rocksalt in 12 BblS gelled brine as needed.
   d) Pump 2000 gals acid w/ 40 ball sealers.
   e) Repeat steps c & d one time adjusting salt block as necessary.
   f) Flush to bottom perf with fresh water.
   g) SI one hour. Swab back rest of day. POH.

5) Test inj tbg while running in hole. Set pkr at +/- 4270'. Load backside with pkr fluid and test. Put on injection.

TEXACO INC
CENTRAL VACUUM U NO. WI-108
API# 3002525797

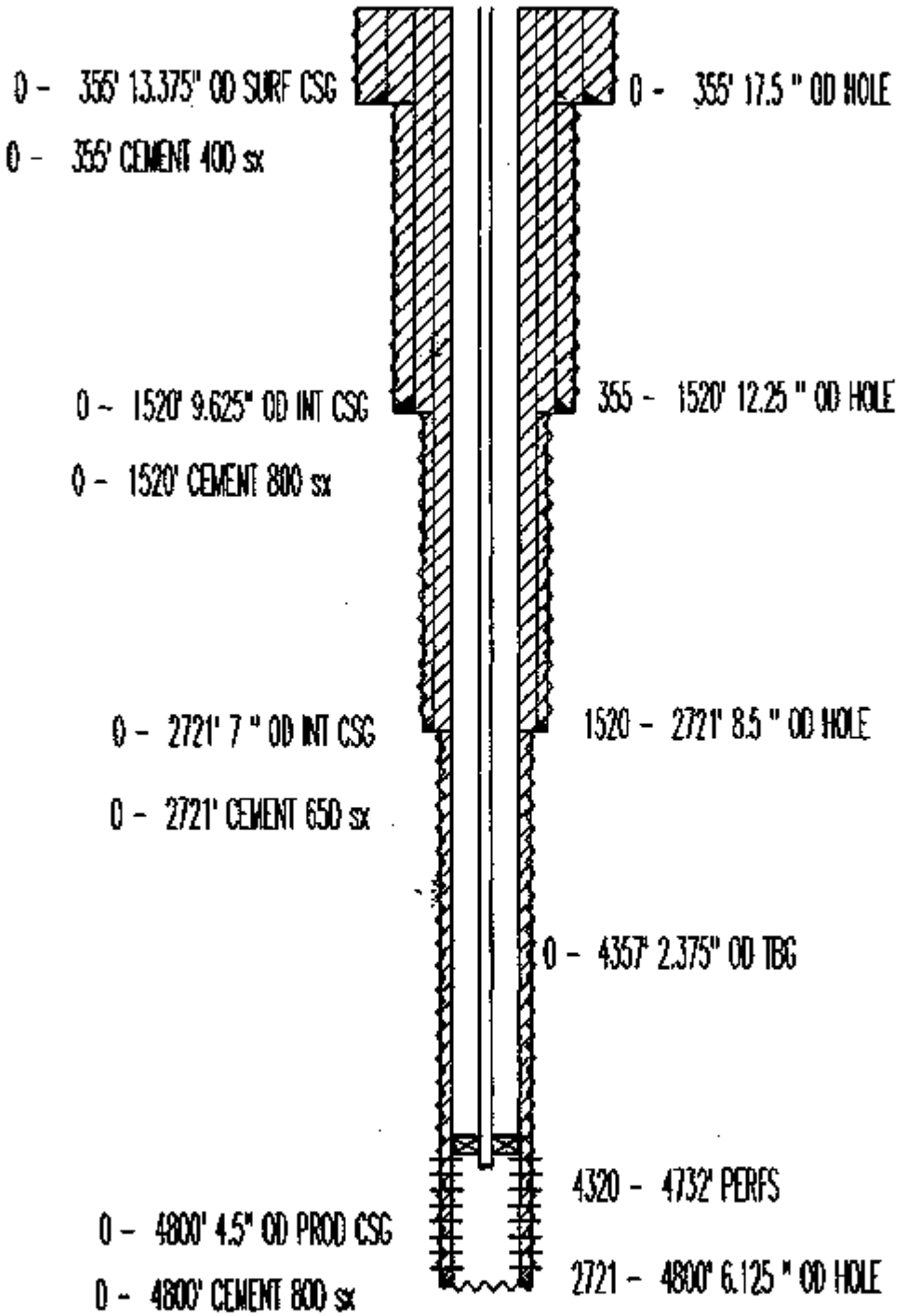

2639 FNL & 1480 FEL
SEC 6 , TWN 18 S, RANGE 35 E
ELEVATION: 3977 GR
COMPLETION DATE: 06-21-79
###

RECOMMENDED REMEDIAL WORK Form PO-90 (M)

Date 2-23-94

Lease Central Vacuum Unit Well No 144 Texaco GWI 44.923148 (39.30775 NWI)

Pool Vacuum Grayburg San Andres County Lea State New Mexico

All depths measured from KB or 12 ft. from ground level.

Tx. Comp. Date 10-15-80 @ T. D. 4800 I. P. Oil as SI WIW Water - Gas - MCF

GOR - Hrs - Flow Pump. Present T. D. 4729' Elevation 3972' GL

DESCRIPTION OF PROSPECTIVE OR PAY ZONES

Name or Type of Zone	Top	Bottom	Remarks
Vacuum Grayburg San Andres	4367'	4717'	Present Injection Interval

CASING AND LINER RECORD

Size	Weight	Grade	Set At	Sacks Cement	Hole Size	Perf.	Remarks
13 3/8"	48#	H-40	355'	600	17 1/2"	-	Cmt circ to surf
9 5/8"	43.5#	H-40	1510'	1000	12 1/4"	-	Cmt circ to surf
7"	23#	K-55	2751'	650	8 3/4"	-	Cmt circ to surf
4 1/2"	10.5#	K-55	4800'	700	6 1/8"	4367'-4717'	TOC 25' by Temp Surv

COMPLETION AND REMEDIAL WORK RECORD

Production Test Before					Treatment				Production Test After			
Date	Oil	Water	GOR	Hrs	Type	Amount	From	To	Oil	Water	GOR	Hrs
10-15-80	New	Well			15%NEA	10800 gal	4367'	4717'		SI WIW		
-21-80		SI WIW			Start	WI	4367'	4717'		NA		24I
6-01-83	300	BWIPD @870	psi	24I	Bleach/Acid	500 gl	4367'	4717'	300	BWIPD @870	psi	24I
2-14-89	299	BWIPD @940	psi	24I	ClO2	1600 gal	(Thru	coiled	tbg)			
					20%NEFE	1250 gal	4367'	4717'	430	BWIPD @940	psi	24I
12-10-90	238	BWIPD @935	psi	24I	15%NEFE	3000 gal	4367'	4717'	527	BWIPD @910	psi	24I

PERFS: 4367, 73, 78, 91, 93, 95, 4414, 21, 34, 39, 46, 64, 68, 72, 79, 88, 91, 95, 4523, 38, 46, 52, 59, 65, 79, 4601, 04, 70, 78, 82, 87, 91, 98, 4704, 10, 17. (36 Int, 72 Holes) Present

Allow 950 psi Max Allow. - Accum. Inj. 1472 MBWI as of 12/92 Present

Test: 0 BBL Water @950 psi Gas - GOR - Hrs 24 Inj xxxx.

Reasons for Remedial Work: See Attached Page

Petroleum Engineering Recommendations and Procedure:

See Attached Page

TEXACO E&P INC
CENTRAL VACUUM U NO. 144 WIW
API# 3002526788

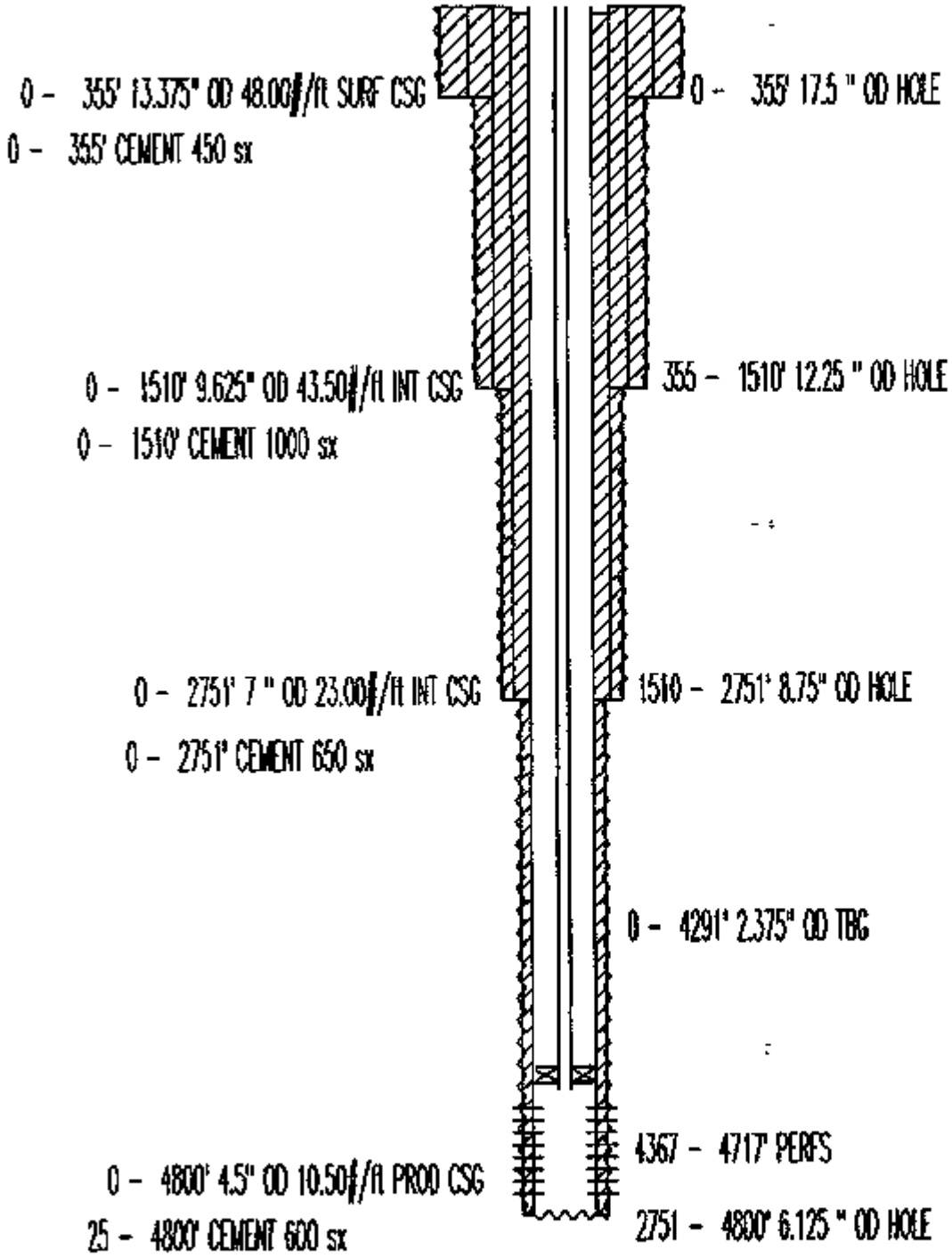

35 FNL & 1330 FEL
SEC 6 , TWN 18 S, RANGE 35 E
ELEVATION: 3972 GR
COMPLETION DATE: 10-15-80

RECOMMENDED REMEDIAL WORK Form PO-90 (M)

Date 2-23-94

Lease Central Vacuum Unit Well No 144 Texaco GWI 44.923148 (39.30775 NWI)

Pool Vacuum Grayburg San Andres County Lea State New Mexico

(1 depths measured from KB or 12 ft. from ground level.

Tx. Comp. Date 10-15-80 @ T. D. 4800 I. P. Oil as SI WIW Water - Gas - MCF

GOR - Hrs - Flow Pump. Present T. D. 4729' Elevation 3972' GL

DESCRIPTION OF PROSPECTIVE OR PAY ZONES

Name or Type of Zone	Top	Bottom	Remarks
Vacuum Grayburg San Andres	4367'	4717'	Present Injection Interval

CASING AND LINER RECORD

Size	Weight	Grade	Set At	Sacks Cement	Hole Size	Perf.	Remarks
13 3/8"	48#	H-40	355'	600	17 1/2"	-	Cmt circ to surf
9 5/8"	43.5#	H-40	1510'	1000	12 1/4"	-	Cmt circ to surf
7"	23#	K-55	2751'	650	8 3/4"	-	Cmt circ to surf
4 1/2"	10.5#	K-55	4800'	700	6 1/8"	4367'-4717'	TOC 25' by Temp Surv

COMPLETION AND REMEDIAL WORK RECORD

Production Test Before					Treatment				Production Test After			
Date	Oil	Water	GOR	Hrs	Type	Amount	From	To	Oil	Water	GOR	Hrs
10-15-80	New Well				15%NEA	10800 gal	4367'	4717'		SI WIW		
-21-80		SI WIW			Start WI		4367'	4717'		NA		24I
d-01-83	300	BWIPD @870 psi		24I	Bleach/Acid 500 gl		4367'	4717'	300	BWIPD @870 psi		24I
2-14-89	299	BWIPD @940 psi		24I	ClO2	1600 gal	(Thru coiled tbg)					
					20%NEFE	1250 gal	4367'	4717'	430	BWIPD @940 psi		24I
12-10-90	238	BWIPD @935 psi		24I	15%NEFE	3000 gal	4367'	4717'	527	BWIPD @910 psi		24I

PERFS: 4367, 73, 78, 91, 93, 95, 4414, 21, 34, 39, 46, 64, 68, 72, 79, 88, 91, 95, 4523, 38, 46, 52, 59, 65, 79, 4601, 04, 70, 78, 82, 87, 91, 98, 4704, 10, 17. (36 Int, 72 Holes) Present

Allow 950 psi Max Allow. - Accum. Inj. 1472 MBWI as of 12/92 Present

Test: 0 BBL Water @950 psi Gas - GOR - Hrs 24 Inj xxxxx.

Reasons for Remedial Work: See Attached Page

Petroleum Engineering Recommendations and Procedure:

See Attached Page

TEXACO E&P INC
CENTRAL VACUUM U NO. 144 WIW
API# 3002526788

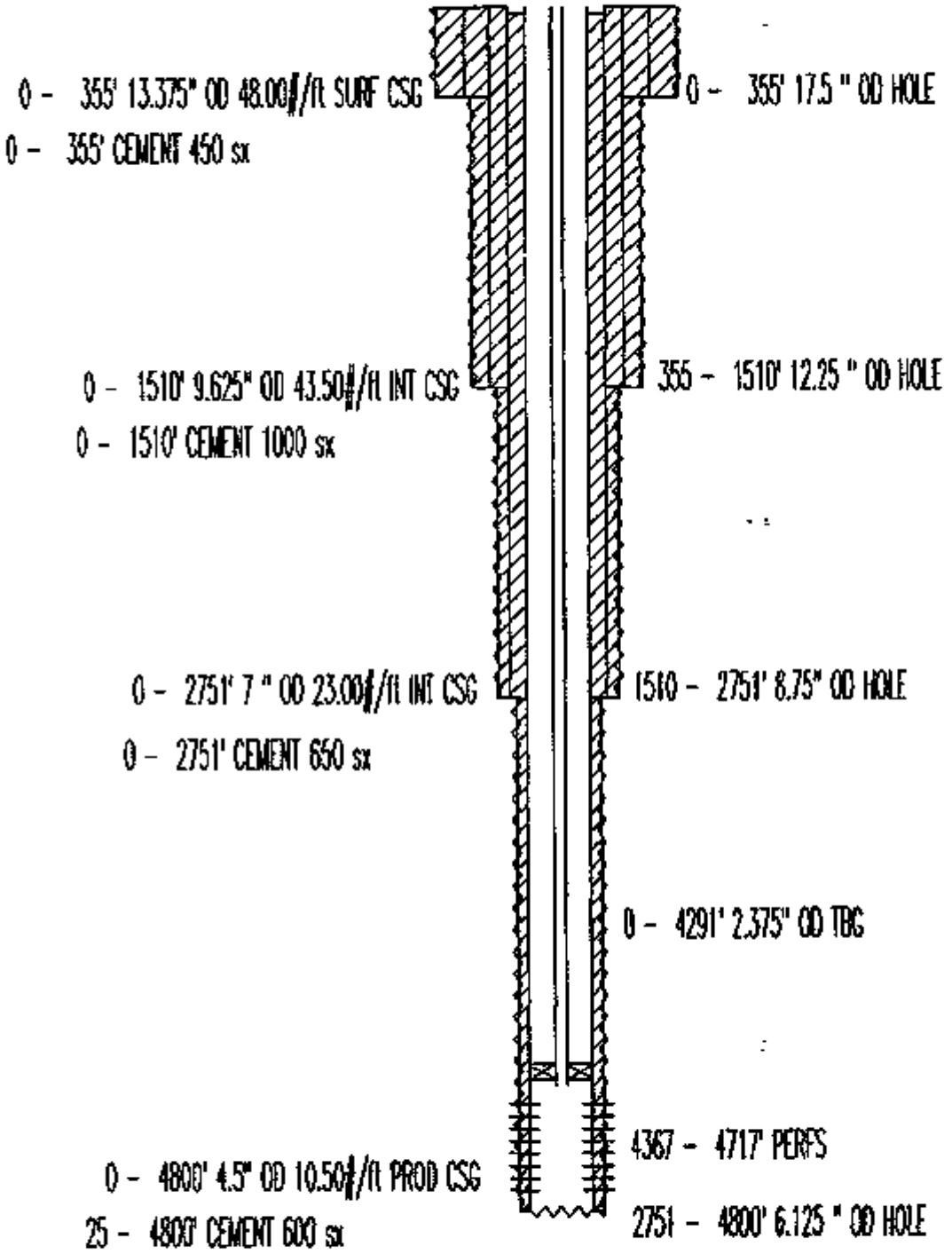

35 FNL & 1330 FEL
SEC 6 , TWN 18 S, RANGE 35 E
ELEVATION: 3972 GR
COMPLETION DATE: 10-15-80

Submit to Appropriate District Office
State Lease - 6 copies
Fee Lease - 5 copies

DISTRICT I
P.O. Box 1980, Hobbs, NM 88240
DISTRICT II
P.O. Box Drawer DD, Artesia, NM 88210
DISTRICT III
1000 Rio Brazos Rd., Aztec, NM 87410

State of New Mexico
Energy, Minerals and Natural Resources Department

OIL CONSERVATION DIVISION

P.O. Box 2088
Santa Fe, New Mexico 87504-2088

Form C-105
Revised 1-1-89

WELL API NO. 30-025-32601
5. Indicate Type of Lease: STATE ☒ FEE ☐
6. State Oil / Gas Lease: B-1113-1

WELL COMPLETION OR RECOMPLETION REPORT AND LOG

1a. Type of Well: OIL WELL ☐ GAS WELL ☐ DRY ☐ OTHER INJECTION
b. Type of Completion: NEW WELL ☒ WORKOVER ☐ DEEPEN ☐ PLUG BACK ☐ DIFF RES. ☐ OTHER
7. Lease Name or Unit Agreement Name: CENTRAL VACUUM UNIT
2. Name of Operator: TEXACO EXPLORATION & PRODUCTION INC.
8. Well No. 194
3. Address of Operator: P.O. BOX 730, HOBBS, NM 88240
9. Pool Name or Wildcat: VACUUM GRAYBURG SAN ANDRES
4. Well Location
Unit Letter C : 14 Feet From The NORTH Line and 1917 Feet From The WEST Line
Section 6 Township 16-S Range 35-E NMPM LEA COUNTY

10. Date Spudded	11. Date T.D. Reached	12. Date Compl. (Ready to Prod.)	13. Elevations (DF & RKB, RT, GR, etc.)	14. Elev. Cghead
2/28/95	3/6/95	3/18/95	3979' GR	3979

15. Total Depth	16. Plug Back T.D.	17. If Mult. Compl. How Many Zones?	18. Intervals Drilled By	Rotary Tools	Cable Tools
4850'	4750'			0-4850'	-

19. Producing Interval(s), of this completion - Top, Bottom, Name: 4281'-4686' VACUUM GRAYBURG SAN ANDRES
20. Was Directional Survey Made: YES
21. Type Electric and Other Logs Run: GR-DLL-MSFL-CSL, GR-CSNG-SDL-DSN, GR-DSN
22. Was Well Cored: NO

23. CASING RECORD (Report all Strings set in well)

CASING SIZE	WEIGHT LB./FT.	DEPTH SET	HOLE SIZE	CEMENT RECORD	AMOUNT PULLED
8 5/8	24#	1552'	11	CL-C 525 SX, CIRC 96	
5 1/2	15.5#	4850'	7 7/8	CL-H 977 SX, CIRC 71	

24. LINER RECORD

SIZE	TOP	BOTTOM	SACKS CEMENT	SCREEN

25. TUBING RECORD

SIZE	DEPTH SET	PACKER SET
2 3/8"	4262'	4268'

26. Perforation record (Interval, size, and number)
4281'-4283', 4293'-4298', 4304'-4306', 4308'-4310', 4363'-4370', 4374'-4378', 4380'-4388', 4391'-4395', 4398'-4405', 4411'-4418', 4423'-4429', 4431'-4437', 4445'-4448', 4457'-4464', 4509'-4511', 4513'-4526', 4530'-4539', 4542'-4544', 4546'-4551', 4553'-4558', 4558'-4565', 4571'-4586', 4593'-4595', 4625'-4632', 4632'-4633', 4635'-4654', 4657'-4686' (288 HOLES)

27. ACID, SHOT, FRACTURE, CEMENT, SQUEEZE, ETC.

DEPTH INTERVAL	AMOUNT AND KIND MATERIAL USED
4281'-4686'	ACID - 20000 GALS 15% NEFE

28. PRODUCTION

Date First Production	Production Method (Flowing, gas lift, pumping - size and type pump)	Well Status (Prod. or Shut-in)
		SHUT-IN

Date of Test	Hours tested	Choke Size	Prod'n For Test Period	Oil - Bbl.	Gas - MCF	Water - Bbl.	Gas - Oil Ratio

Flow Tubing Press.	Casing Pressure	Calculated 24-Hour Rate	Oil - Bbl.	Gas - MCF	Water - Bbl.	Oil Gravity - API -(Corr.)

29. Disposition of Gas (Sold, used for fuel, vented, etc.)
Test Witnessed By: HOLLICE CLAY
30. List Attachments: DEVIATION SURVEY

I hereby certify that the information on both sides of this form is true and complete to the best of my knowledge and belief.

SIGNATURE [signature] TITLE Engr Asst DATE 3/29/95
TYPE OR PRINT NAME Monte C. Duncan Telephone No. 397-0418

Form C-105 (Rev. 10-91) Page 2.0

APR 1995
Received
Texaco
Hobbs Area

Submit to Appropriate District Office
State Lease - 6 copies
Fee Lease - 5 copies

DISTRICT I
P.O. Box 1980, Hobbs, NM 88240
DISTRICT II
P.O. Box Drawer DD, Artesia, NM 88210
DISTRICT III
1000 Rio Brazos Rd., Aztec, NM 87410

State of New Mexico
Energy, Minerals and Natural Resources Department

OIL CONSERVATION DIVISION

P.O. Box 2088
Santa Fe, New Mexico 87504-2088

Form C-105
Revised 1-1-89

WELL API NO. 30-025-32802
5. Indicate Type of Lease: STATE ☒ FEE ☐
6. State Oil / Gas Lease: B-1306

WELL COMPLETION OR RECOMPLETION REPORT AND LOG

1a. Type of Well: OIL WELL ☒ GAS WELL ☐ DRY ☐ OTHER
b. Type of Completion: NEW WELL ☒ WORKOVER ☐ DEEPEN ☐ PLUG BACK ☐ DIFF RESV. ☐ OTHER

7. Lease Name or Unit Agreement Name: CENTRAL VACUUM UNIT

2. Name of Operator: TEXACO EXPLORATION & PRODUCTION INC.
8. Well No. 195

3. Address of Operator: P.O. BOX 730, HOBBS, NM 88240
9. Pool Name or Wildcat: VACUUM GRAYBURG SAN ANDRES

4. Well Location
Unit Letter A : 729 Feet From The NORTH Line and 1313 Feet From The EAST Line
Section 6 Township 18-S Range 35-E NMPM LEA COUNTY

10. Date Spudded	11. Date T.D. Reached	12. Date Compl. (Ready to Prod.)	13. Elevations (DF & RKB, RT, GR, etc.)	14. Elev. Cashead
2/19/95	2/24/95	3/12/95	3976' GR	3976'

15. Total Depth	16. Plug Back T.D.	17. If Mult. Compl. How Many Zones?	18. Intervals Drilled By	Rotary Tools	Cable Tools
4850	4812'			0-4850'	-

19. Producing Interval(s), of this completion - Top, Bottom, Name
4268'-4704' VACUUM GRAYBURG SAN ANDRES

20. Was Directional Survey Made: YES

21. Type Electric and Other Logs Run
DLL-MSF, LONG SPACED SONIC GR, SDL-DSN-GR

22. Was Well Cored: NO

23. CASING RECORD (Report all Strings set in well)

CASING SIZE	WEIGHT LB./FT.	DEPTH SET	HOLE SIZE	CEMENT RECORD	AMOUNT PULLED
8 5/8	24#	1517'	11	CL-C 650 SX, CIRC 223	
5 1/2	15.5#	4850'	7 7/8	CL-H 677 SX, CIRC 23	

24. LINER RECORD

SIZE	TOP	BOTTOM	SACKS CEMENT	SCREEN

25. TUBING RECORD

SIZE	DEPTH SET	PACKER SET
2 7/8"	4738'	-

26. Perforation record (interval, size, and number)
4268'-4273', 4276'-4279', 4282'-4288', 4291'-4302', 4304'-4309', 4350'-4359', 4378'-4380', 4383'-4406', 4408'-4410', 4439'-4450', 4454'-4458', 4461'-4460', 4462'-4481', 4485'-4490', 4492'-4495', 4503'-4507', 4509'-4517', 4521'-4526', 4528'-4533', 4550'-4558', 4563'-4565' 4570'-4572', 4578'-4580', 4586'-4587', 4590'-4602', 4604'-4616', 4622'-4636', 4638'-4640', 4642'-4647', 4652'-4670', 4679'-4682', 4694'-4696', 4700'-4704' (430 HOLES)

27. ACID, SHOT, FRACTURE, CEMENT, SQUEEZE, ETC.

DEPTH INTERVAL	AMOUNT AND KIND MATERIAL USED
4268'-4704'	ACID - 21000 GALS 15% HCL NEFE

28. PRODUCTION

Date First Production	Production Method (Flowing, gas lift, pumping - size and type pump)	Well Status (Prod. or Shut-in)
3/13/95	PUMPING 2 1/2" X 1 3/4" X 20' ROD PUMP	PROD

Date of Test	Hours tested	Choke Size	Prod'n For Test Period	Oil - Bbl.	Gas - MCF	Water - Bbl.	Gas - Oil Ratio
3/15/95	24			297	146	46	492

Flow Tubing Press.	Casing Pressure	Calculated 24-Hour Rate	Oil - Bbl.	Gas - MCF	Water - Bbl.	Oil Gravity - API -(Corr.)
						38.6

29. Disposition of Gas (Sold, used for fuel, vented, etc.)
SOLD

Test Witnessed By
HOLLICE CLAY

30. List Attachments DEVIATION SURVEY

I hereby certify that the information on both sides of this form is true and complete to the best of my knowledge and belief.

SIGNATURE Monte Duncan TITLE Engr Asst DATE 3/29/95

TYPE OR PRINT NAME Monte C. Duncan

Telephone No. 397-0418

Received
APR 1995
Texaco
Hobbs Area

DeSoto/Nichols 10-94 ver 2.0

INSTRUCTIONS

This form is to be filed with the appropriate District Office of the Division not later than 20 days after the completion of any newly-drilled or deepened well. It shall be accompanied by one copy of all electrical and radio-activity logs run on the well and a summary of all special tests conducted, including drill stem tests. All depths reported shall be measured depths. In the case of directionally drilled wells, true vertical depths shall be reported. For multiple completions, Items 25 through 29 shall be reported for each zone. The form is to be filed in quintuplicate except on state land, where six copies are required. See Rule 1105.

INDICATE FORMATION TOPS IN CONFORMANCE WITH GEOGRAPHICAL SECTION OF STATE

Southeastern New Mexico			Northwestern New Mexico	
T. Anhy	1468	T. Canyon	T. Ojo Alamo	T. Penn "B"
T. Salt	1578	T. Strawn	T. Kirtland-Fruitland	T. Penn "C"
B. Salt	2660	T. Atoka	T. Pictured Cliffs	T. Penn "D"
T. Yates	2845	T. Miss	T. Cliff House	T. Leadville
T. 7 Rivers	3155	T. Devonian	T. Menefee	T. Madison
T. Queen	3736	T. Silurian	T. Point Lookout	T. Elbert
T. Grayburg	4062	T. Montoya	T. Mancos	T. McCracken
T. San Andres	4378	T. Simpson	T. Gallup	T. Ignacio Otzte
T. Glorieta		T. McKee	T. Base Greenhorn	T. Granite
T. Paddock		T. Ellenburger	T. Dakota	T.
T. Blinebry		T. Gr. Wash	T. Morrison	T.
T. Tubb		T. Delaware Sand	T. Todilto	T.
T. Drinkard		T. Bone Springs	T. Entrada	T.
T. Abo		T.	T. Wingate	T.
T. Wolfcamp		T.	T. Chinle	T.
T. Penn		T.	T. Permian	T.
T. Cisco (Bough C)		T.	T. Penn "A"	T.

OIL OR GAS SANDS OR ZONES

No. 1, from _____ to _____ No. 3, from _____ to _____

No. 2, from _____ to _____ No. 4, from _____ to _____

IMPORTANT WATER SANDS

Include data on rate of water inflow and elevation to which water rose in the hole.

No. 1, from _____ to _____ feet

No. 2, from _____ to _____ feet

No. 3, from _____ to _____ feet

LITHOLOGY RECORD (Attach additional sheet if necessary)

From	To	Thickness in Feet	Lithology	From	To	Thickness in Feet	Lithology
0'	1468'	1468'	SS, SHALE				
1468'	1578'	110'	ANHYDRITE				
1578'	2660'	1082'	SALT				
2660'	2845'	185'	ANHYDRITE, DOLOMITE				
2845'	4062'	1217'	ANHYDRITE,DOLOMITE, SS				
4062'	4850'	788'	ANHYDRITE, DOLOMITE, LIME				

RECEIVED

OCD ARTESIA OFFICE

DeSoto/Nichols 10-94 ver 2.0

Submit to Appropriate District Office
State Lease - 6 copies
Fee Lease - 5 copies

DISTRICT I
P.O. Box 1980, Hobbs, NM 88240
DISTRICT II
P.O. Box Drawer DD, Artesia, NM 88210
DISTRICT III
1000 Rio Brazos Rd., Aztec, NM 87410

State of New Mexico
Energy, Minerals and Natural Resources Department

OIL CONSERVATION DIVISION

P.O. Box 2088
Santa Fe, New Mexico 87504-2088

Form C-105
Revised 1-1-89

WELL API NO. 30-025-32603
5. Indicate Type of Lease: STATE ☒ FEE ☐
6. State Oil / Gas Lease: B-1113-1

WELL COMPLETION OR RECOMPLETION REPORT AND LOG

1a. Type of Well: OIL WELL ☒ GAS WELL ☐ DRY ☐ OTHER
b. Type of Completion: NEW WELL ☒ WORKOVER ☐ DEEPEN ☐ PLUG BACK ☐ DIFF RES. ☐ OTHER

7. Lease Name or Unit Agreement Name: CENTRAL VACUUM UNIT

2. Name of Operator: TEXACO EXPLORATION & PRODUCTION INC.
8. Well No. 106
3. Address of Operator: P.O. BOX 730, HOBBS, NM 88240
9. Pool Name or Wildcat: VACUUM GRAYBURG SAN ANDRES

4. Well Location
Unit Letter C : 649 Feet From The NORTH Line and 2535 Feet From The WEST Line
Section 6 Township 18-S Range 35-E NMPM LEA COUNTY

10. Date Spudded	11. Date T.D. Reached	12. Date Compl. (Ready to Prod.)	13. Elevations (DF & RKB, RT, GR, etc.)	14. Elev. Cashead
2/13/95	2/19/95	3/6/95	3968' GR	3968'

15. Total Depth	16. Plug Back T.D.	17. If Mult. Compl. How Many Zones?	18. Intervals Drilled By	Rotary Tools	Cable Tools
4850'	4760'			0-4850'	-

19. Producing Interval(s), of this completion - Top, Bottom, Name
4258'-4646' VACUUM GRAYBURG SAN ANDRES

20. Was Directional Survey Made: YES

21. Type Electric and Other Logs Run
DLL-MSFL, LONG SPACED SONIC, SDL-DSN-GR, GR-CCL

22. Was Well Cored: NO

23. CASING RECORD (Report all Strings set in well)

CASING SIZE	WEIGHT LB./FT.	DEPTH SET	HOLE SIZE	CEMENT RECORD	AMOUNT PULLED
8 5/8	24#	1546'	11	CL-C 500 SX, CIRC 6	
5 1/2	15.5#	4850'	7 7/8	CL-H 955 SX, CIRC 64	

24. LINER RECORD

SIZE	TOP	BOTTOM	SACKS CEMENT	SCREEN

25. TUBING RECORD

SIZE	DEPTH SET	PACKER SET
2 7/8"	4705'	-

26. Perforation record (Interval, size, and number)
4258'-4261', 4264'-4268', 4298'-4279', 4284'-4287', 4313'-4362', 4361'-4365', 4369'-4371', 4382'-4394', 4399'-4409', 4411'-4413', 4419'-4422', 4429'-4444', 4446'-4466', 4472'-4474', 4480'-4482', 4485'-4490', 4492'-4496', 4518'-4523', 4528'-4539', 4543'-4557', 4559'-4567', 4571'-4585', 4587'-4593', 4608'-4614', 4616'-4618', 4639'-4646' (404 HOLES)

27. ACID, SHOT, FRACTURE, CEMENT, SQUEEZE, ETC.

DEPTH INTERVAL	AMOUNT AND KIND MATERIAL USED
4258'-4646'	ACID - 20000 GALS 15% HCL NEFE

28. PRODUCTION

Date First Production	Production Method (Flowing, gas lift, pumping - size and type pump)	Well Status (Prod. or Shut-in)
3/6/95	PUMPING 2 1/2" X 1 3/4" X 24' ROD PUMP	PROD

Date of Test	Hours tested	Choke Size	Prod'n For Test Period	Oil - Bbl.	Gas - MCF	Water - Bbl.	Gas - Oil Ratio
3/9/95	24			72	120	216	1667

Flow Tubing Press.	Casing Pressure	Calculated 24-Hour Rate	Oil - Bbl.	Gas - MCF	Water - Bbl.	Oil Gravity - API - (Corr.)
						38.6

29. Disposition of Gas (Sold, used for fuel, vented, etc.): SOLD
Test Witnessed By: HOLLICE CLAY

30. List Attachments: DEVIATION SURVEY

I hereby certify that the information on both sides of this form is true and complete to the best of my knowledge and belief.

SIGNATURE Monte C. Duncan TITLE Engr Asst DATE 3/30/95
TYPE OR PRINT NAME Monte C. Duncan Telephone No. 397-0418

DeSoto/Nichols 10-94 ver 2.0

This form is to be filed with the appropriate District Office of the Division not later than 20 days after the completion of any newly-drilled or deepened well. It shall be accompanied by one copy of all electrical and radio-activity logs run on the well and a summary of all special tests conducted, including drill stem tests. All depths reported shall be measured depths. In the case of directionally drilled wells, true verticle depths shall be reported. For multiple completions, Items 25 through 29 shall be reported for each zone. The form is to be filed in quintuplicate except on state land, where six copies are required. See Rule 1105.

INDICATE FORMATION TOPS IN CONFORMANCE WITH GEOGRAPHICAL SECTION OF STATE

Southeastern New Mexico			Northwestern New Mexico	
T. Anhy	1443'	T. Canyon	T. Ojo Alamo	T. Penn "B"
T. Salt	1550'	T. Strawn	T. Kirtland-Fruitland	T. Penn "C"
B. Salt	2640'	T. Atoka	T. Pictured Cliffs	T. Penn "D"
T. Yates	2825'	T. Miss	T. Cliff House	T. Leadville
T. 7 Rivers	3135'	T. Devonian	T. Menefee	T. Madison
T. Queen	3715'	T. Silurian	T. Point Lookout	T. Elbert
T. Grayburg	4036'	T. Montoya	T. Mancos	T. McCracken
T. San Andres	4336'	T. Simpson	T. Gallup	T. Ignacio Otzte
T. Glorieta		T. McKee	T. Base Greenhorn	T. Granite
T. Paddock		T. Ellenburger	T. Dakota	T.
T. Blinebry		T. Gr. Wash	T. Morrison	T.
T. Tubb		T. Delaware Sand	T. Todilto	T.
T. Drinkard		T. Bone Springs	T. Entrada	T.
T. Abo		T.	T. Wingate	T.
T. Wolfcamp		T.	T. Chinle	T.
T. Penn		T.	T. Permian	T.
T. Cisco (Bough C)		T.	T. Penn "A"	T.

OIL OR GAS SANDS OR ZONES

No. 1, from	4235'	to 4495'	No. 3, from		to
No. 2, from	4515'	to 4847'	No. 4, from		to

IMPORTANT WATER SANDS

Include data on rate of water inflow and elevation to which water rose in the hole.

No. 1, from	to	feet
No. 2, from	to	feet
No. 3, from	to	feet

LITHOLOGY RECORD (Attach additional sheet if necessary)

From	To	Thickness In Feet	Lithology	From	To	Thickness In Feet	Lithology
0'	1443'	1443'	SS, SHALE				
1443'	1550'	107'	ANHYDRITE				
1550'	2640'	1090'	SALT				
2640'	4036'	1396'	ANHYDRITE,DOLOMITE, SS				
4036'	4850'	814'	ANHYDRITE, DOLOMITE, LIME				

DeSoto/Nichols 10-94 ver 2.0

Submit to Appropriate District Office
State Lease - 6 copies
Fee Lease - 5 copies

DISTRICT I
P.O. Box 1980, Hobbs, NM 88240
DISTRICT II
P.O. Box Drawer DD, Artesia, NM 88210
DISTRICT III
1000 Rio Brazos Rd., Aztec, NM 87410

State of New Mexico
Energy, Minerals and Natural Resources Department

OIL CONSERVATION DIVISION

P.O. Box 2088
Santa Fe, New Mexico 87504-2088

Form C-105
Revised 1-1-89

WELL API NO. 30-025-32791
5. Indicate Type of Lease: STATE ☒ FEE ☐
6. State Oil / Gas Lease: B-1113-1

WELL COMPLETION OR RECOMPLETION REPORT AND LOG

1a. Type of Well: OIL WELL ☒ GAS WELL ☐ DRY ☐ OTHER ____
b. Type of Completion: NEW WELL ☒ WORKOVER ☐ DEEPEN ☐ PLUG BACK ☐ DIFF RES. ☐ OTHER

7. Lease Name or Unit Agreement Name: CENTRAL VACUUM UNIT

2. Name of Operator: TEXACO EXPLORATION & PRODUCTION INC.
8. Well No. 197
3. Address of Operator: P.O. BOX 730, HOBBS, NM 88240
9. Pool Name or Wildcat: VACUUM GRAYBURG SAN ANDRES

4. Well Location
Unit Letter O : 717 Feet From The NORTH Line and 1993 Feet From The WEST Line
Section 6 Township 18-S Range 35-E NMPM ____ LEA COUNTY

10. Date Spudded	11. Date T.D. Reached	12. Date Compl. (Ready to Prod.)	13. Elevations (DF & RKB, RT, GR, etc.)	14. Elev. Cighead
2/2/95	2/9/95	2/21/95	3962' GR	3962'

15. Total Depth	16. Plug Back T.D.	17. If Mult. Compl. How Many Zones?	18. Intervals Drilled By	Rotary Tools	Cable Tools
4850'	4800'			0-4850'	-

19. Producing Interval(s), of this completion - Top, Bottom, Name
4269'-4677' VACUUM GRAYBURG SAN ANDRES

20. Was Directional Survey Made: YES

21. Type Electric and Other Logs Run
DDL-MSFL, SDDS-NEUTRON-GR-CAL, GR-CCL,COMPUTER LOG

22. Was Well Cored: NO

23. CASING RECORD (Report all Strings set in well)

CASING SIZE	WEIGHT LB./FT.	DEPTH SET	HOLE SIZE	CEMENT RECORD	AMOUNT PULLED
8 5/8	24#	1570'	11	CL-C 650 SX, CIRC 200	
5 1/2	15.5#	4850'	7 7/8	CL-H 975 SX, CIRC 150	

24. LINER RECORD

SIZE	TOP	BOTTOM	SACKS CEMENT	SCREEN

25. TUBING RECORD

SIZE	DEPTH SET	PACKER SET
2 7/8"	4757'	-

26. Perforation record (interval, size, and number)
4269'-4271', 4276'-4279', 4288'-4296', 4299'-4304', 4320'-4344', 4348', 4350', 4357'-4363', 4367'-4376', 4378, 4387', 4390'-4394', 4407'-4414', 4416'-4419', 4422', 4437', 4445'-4448', 4517'-4524', 4531'-4534', 4536'-4541', 4544'-4547', 4551'-4553', 4565', 4568', 4573'-4578', 4582'-4586', 4589'-4596', 4600'-4602', 4606'-4608', 4625'-4627', 4632', 4642', 4645'-4652', 4659'-4665', 4668'-4677' (90 HOLES)

27. ACID, SHOT, FRACTURE, CEMENT, SQUEEZE, ETC.

DEPTH INTERVAL	AMOUNT AND KIND MATERIAL USED
4269'-4677'	ACID - 18000 GALS 15% HCL NEFE

28. PRODUCTION

Date First Production: 2/21/95
Production Method (Flowing, gas lift, pumping - size and type pump): PUMPING 2 1/2" X 1 3/4" X 24' ROD PUMP
Well Status (Prod. or Shut-in): PROD.

Date of Test	Hours tested	Choke Size	Prod'n For Test Period	Oil - Bbl.	Gas - MCF	Water - Bbl.	Gas - Oil Ratio
2/28/95	24			117	36	252	308

Flow Tubing Press.	Casing Pressure	Calculated 24-Hour Rate	Oil - Bbl.	Gas - MCF	Water - Bbl.	Oil Gravity - API - (Corr.)
						38.6

29. Disposition of Gas (Sold, used for fuel, vented, etc.): SOLD
Test Witnessed By: MONICE CLAY

List Attachments: DEVIATION SURVEY

I hereby certify that the information on both sides of this form is true and complete to the best of my knowledge and belief.

SIGNATURE ____ TITLE Engr Asst DATE 4/3/95
TYPE OR PRINT NAME Monte C. Duncan Telephone No. 397-0418

Received APR 1995 Texaco Hobbs Area

This form is to be filed with the appropriate District Office of the Division not later than 20 days after the completion of any newly-drilled or deepened well. It shall be accompanied by one copy of all electrical and radio-activity logs run on the well and a summary of all special tests conducted, including drill stem tests. All depths reported shall be measured depths. In the case of directionally drilled wells, true vertical depths shall be reported. For multiple completions, Items 25 through 29 shall be reported for each zone. The form is to be filed in quintuplicate except on state land, where six copies are required. See Rule 1105.

INDICATE FORMATION TOPS IN CONFORMANCE WITH GEOGRAPHICAL SECTION OF STATE

Southeastern New Mexico			Northwestern New Mexico	
T. Anhy	1440'	T. Canyon	T. Ojo Alamo	T. Penn "B"
T. Salt	1550'	T. Strawn	T. Kirtland-Fruitland	T. Penn "C"
B. Salt	2642'	T. Atoka	T. Pictured Cliffs	T. Penn "D"
T. Yates	2820'	T. Miss	T. Cliff House	T. Leadville
T. 7 Rivers	3141'	T. Devonian	T. Menefee	T. Madison
T. Queen	3714'	T. Silurian	T. Point Lookout	T. Elbert
T. Grayburg	4030'	T. Montoya	T. Mancos	T. McCracken
T. San Andres	4330'	T. Simpson	T. Gallup	T. Ignacio Otzte
T. Glorieta		T. McKee	T. Base Greenhorn	T. Granite
T. Paddock		T. Ellenburger	T. Dakota	T.
T. Blinebry		T. Gr. Wash	T. Morrison	T.
T. Tubb		T. Delaware Sand	T. Todilto	T.
T. Drinkard		T. Bone Springs	T. Entrada	T.
T. Abo		T.	T. Wingate	T.
T. Wolfcamp		T.	T. Chinle	T.
T. Penn		T.	T. Permian	T.
T. Cisco (Bough C)		T.	T. Penn "A"	T.

OIL OR GAS SANDS OR ZONES

No. 1, from	4251'	to 4473'	No. 3, from		to
No. 2, from	4514'	to 4650'	No. 4, from		to

IMPORTANT WATER SANDS

Include data on rate of water inflow and elevation to which water rose in the hole.

No. 1, from	to	feet
No. 2, from	to	feet
No. 3, from	to	feet

LITHOLOGY RECORD (Attach additional sheet if necessary)

From	To	Thickness in Feet	Lithology	From	To	Thickness in Feet	Lithology
0'	1440'	1440'	SS, SHALE				
1440'	1550'	110'	ANHYDRITE				
1550'	2642'	1092'	SALT				
2642'	4030'	1388'	ANHYDRITE, DOLOMITE, SS				
4030'	4850'	820'	ANHYDRITE, DOLOMITE, LIME				

DeSoto/Nichols 10-94 ver 2.0

Submit to Appropriate District Office
State Lease - 6 copies
Fee Lease - 5 copies

DISTRICT I
P.O. Box 1980, Hobbs, NM 88240
DISTRICT II
P.O. Box Drawer DD, Artesia, NM 88210
DISTRICT III
1000 Rio Brazos Rd., Aztec, NM 87410

State of New Mexico
Energy, Minerals and Natural Resources Department

OIL CONSERVATION DIVISION

P.O. Box 2088
Santa Fe, New Mexico 87504-2088

Form C-105
Revised 1-1-89

WELL API NO. 30-025-32805

5. Indicate Type of Lease: STATE ☒ FEE ☐

6. State Oil / Gas Lease: B-1113-1

WELL COMPLETION OR RECOMPLETION REPORT AND LOG

1a. Type of Well: OIL WELL ☐ GAS WELL ☐ DRY ☐ OTHER INJECTION

b. Type of Completion: NEW WELL ☒ WORKOVER ☐ DEEPEN ☐ PLUG BACK ☐ DIFF RES. ☐ OTHER

7. Lease Name or Unit Agreement Name: CENTRAL VACUUM UNIT

2. Name of Operator: TEXACO EXPLORATION & PRODUCTION INC.

8. Well No. 200

3. Address of Operator: P.O. BOX 730, HOBBS, NM 88240

9. Pool Name or Wildcat: VACUUM GRAYBURG SAN ANDRES

4. Well Location

Unit Letter C : 1301 Feet From The NORTH Line and 1875 Feet From The WEST Line

Section 6 Township 18-S Range 35-E NMPM LEA COUNTY

10. Date Spudded	11. Date T.D. Reached	12. Date Compl. (Ready to Prod.)	13. Elevations (DF & RKB, RT, GR, etc.)	14. Elev. Cashead
3/18/95	3/23/95	4/7/95	3975' GR	3975'

15. Total Depth	16. Plug Back T.D.	17. If Mult. Compl. How Many Zones?	18. Intervals Drilled By	Rotary Tools	Cable Tools
4950'	4786'			0-4950'	-

19. Producing Interval(s), of this completion - Top, Bottom, Name: 4253'-4661' VACUUM GRAYBURG SAN ANDRES

20. Was Directional Survey Made: YES

21. Type Electric and Other Logs Run: SDL-DSN-DLL-MSFL, DIPOLESONIC-CAST

22. Was Well Cored: NO

23. CASING RECORD (Report all Strings set in well)

CASING SIZE	WEIGHT LB./FT.	DEPTH SET	HOLE SIZE	CEMENT RECORD	AMOUNT PULLED
8 5/8	24#	1524'	11	CL-C 525 SX, CIRC 127	
5 1/2	15.5#	4950'	7 7/8	CL-H 812 SX, CIRC 61	

24. LINER RECORD

SIZE	TOP	BOTTOM	SACKS CEMENT	SCREEN

25. TUBING RECORD

SIZE	DEPTH SET	PACKER SET
2 3/8"	4196'	4201'

26. Perforation record (interval, size, and number)

4253'-59', 4262'-65', 4268'-70', 4273'-76', 4277'-78', 4308'-14', 4316'-18', 4319'-20', 4322'-24', 4340'-44', 4348'-53', 4356'-62', 4370'-80', 4383'-85', 4387'-92', 4394'-95', 4397'-4401', 4403'-05', 4407'-18', 4426'-31', 4441'-51', 4454'-69', 4486'-89', 4491'-99', 4506'-18', 4521'-27', 4529'-38', 4538'-43', 4548'-54', 4557'-58', 4566'-68', 4571'-80', 4584'-86', 4590'-93', 4596'-98', 4600'-4602', 4604'-05', 4608'-10', 4623'-28', 4636'-37', 4640'-51' (404 HOLES)

27. ACID, SHOT, FRACTURE, CEMENT, SQUEEZE, ETC.

DEPTH INTERVAL	AMOUNT AND KIND MATERIAL USED
4253'-4661'	ACID - 20,000 GALS 15% HCL NEFE

28. PRODUCTION

Date First Production	Production Method (Flowing, gas lift, pumping - size and type pump)	Well Status (Prod. or Shut-in)
		SHUT-IN

Date of Test	Hours tested	Choke Size	Prod'n For Test Period	Oil - Bbl.	Gas - MCF	Water - Bbl.	Gas - Oil Ratio

Flow Tubing Press.	Casing Pressure	Calculated 24-Hour Rate	Oil - Bbl.	Gas - MCF	Water - Bbl.	Oil Gravity - API -(Corr.)

29. Disposition of Gas (Sold, used for fuel, vented, etc.)

Test Witnessed By: HOLLICE CLAY

30. List Attachments: DEVIATION SURVEY

I hereby certify that the information on both sides of this form is true and complete to the best of my knowledge and belief.

SIGNATURE Monte C Duncan TITLE Engr Asst DATE 4/24/95

TYPE OR PRINT NAME Monte C. Duncan Telephone No. 397-0418

DeSoto/Nichols 10-94 ver 2.0

INSTRUCTIONS

This form is to be filed with the appropriate District Office of the Division not later than 20 days after the completion of any newly-drilled or deepened well. It shall be accompanied by one copy of all electrical and radio-activity logs run on the well and a summary of all special tests conducted, including drill stem tests. All depths reported shall be measured depths. In the case of directionally drilled wells, true vertical depths shall be reported. For multiple completions, items 25 through 29 shall be reported for each zone. The form is to be filed in quintuplicate except on state land, where six copies are required. See Rule 1105.

INDICATE FORMATION TOPS IN CONFORMANCE WITH GEOGRAPHICAL SECTION OF STATE

Southeastern New Mexico			Northwestern New Mexico	
T. Anhy	1428'	T. Canyon	T. Ojo Alamo	T. Penn "B"
T. Salt	1553'	T. Strawn	T. Kirtland-Fruitland	T. Penn "C"
B. Salt	2635'	T. Atoka	T. Pictured Cliffs	T. Penn "D"
T. Yates	2820'	T. Miss	T. Cliff House	T. Leadville
T. 7 Rivers	3131'	T. Devonian	T. Menefee	T. Madison
T. Queen	3702'	T. Silurian	T. Point Lookout	T. Elbert
T. Grayburg	4015'	T. Montoya	T. Mancos	T. McCracken
T. San Andres	4308'	T. Simpson	T. Gallup	T. Ignacio Otzte
T. Glorieta		T. McKee	T. Base Greenhorn	T. Granite
T. Paddock		T. Ellenburger	T. Dakota	T.
T. Blinebry		T. Gr. Wash	T. Morrison	T.
T. Tubb		T. Delaware Sand	T. Todilto	T.
T. Drinkard		T. Bone Springs	T. Entrada	T.
T. Abo		T.	T. Wingate	T.
T. Wolfcamp		T.	T. Chinle	T.
T. Penn		T.	T. Permian	T.
T. Cisco (Bough C)		T.	T. Penn "A"	T.

OIL OR GAS SANDS OR ZONES

No. 1, from 4225'	to 4470'	No. 3, from 4640'	to 4710'
No. 2, from 4490'	to 4610'	No. 4, from	to

IMPORTANT WATER SANDS

Include data on rate of water inflow and elevation to which water rose in the hole.

No. 1, from	to	feet
No. 2, from	to	feet
No. 3, from	to	feet

LITHOLOGY RECORD (Attach additional sheet if necessary)

From	To	Thickness in Feet	Lithology	From	To	Thickness in Feet	Lithology
0'	1428'	1428'	SS, SHALE				
1428'	1553'	125'	ANHYDRITE				
1553'	2635'	1082'	SALT				
2635'	2822'	187'	ANHYDRITE, DOLOMITE				
2822'	4015'	1193'	ANHYDRITE, DOLOMITE, SS				
4015'	4850'	835'	ANHYDRITE, DOLOMITE, LIME				

Submit to Appropriate District Office
State Lease - 6 copies
Fee Lease - 5 copies

DISTRICT I
P.O. Box 1980, Hobbs, NM 88240

DISTRICT II
P.O. Box Drawer DD, Artesia, NM 88210

DISTRICT III
1000 Rio Brazos Rd., Aztec, NM 87410

State of New Mexico
Energy, Minerals and Natural Resources Department

OIL CONSERVATION DIVISION

P.O. Box 2088
Santa Fe, New Mexico 87504-2088

Form C-105
Revised 1-1-89

WELL API NO. 30-025-32808

5. Indicate Type of Lease: STATE ☒ FEE ☐

6. State Oil / Gas Lease: B-1306

WELL COMPLETION OR RECOMPLETION REPORT AND LOG

1a. Type of Well: OIL WELL ☐ GAS WELL ☐ DRY ☐ OTHER INJECTION

b. Type of Completion: NEW WELL ☒ WORKOVER ☐ DEEPEN ☐ PLUG BACK ☐ DIFF RES. ☐ OTHER

7. Lease Name or Unit Agreement Name: CENTRAL VACUUM UNIT

2. Name of Operator: TEXACO EXPLORATION & PRODUCTION INC.

8. Well No. 201

3. Address of Operator: P.O. BOX 730, HOBBS, NM 88240

9. Pool Name or Wildcat: VACUUM GRAYBURG SAN ANDRES

4. Well Location
Unit Letter G : 1360 Feet From The NORTH Line and 1973 Feet From The EAST Line
Section 6 Township 18-S Range 35-E NMPM LEA COUNTY

10. Date Spudded	11. Date T.D. Reached	12. Date Compl. (Ready to Prod.)	13. Elevations (DF & RKB, RT, GR, etc.)	14. Elev. Cashead
3/11/95	3/16/95	3/30/95	3977' GR	3977'

15. Total Depth	16. Plug Back T.D.	17. If Mult. Compl. How Many Zones?	18. Intervals Drilled By	Rotary Tools	Cable Tools
4850'	4781'			0-4850'	-

19. Producing Interval(s), of this completion - Top, Bottom, Name
4290'-4680' VACUUM GRAYBURG SAN ANDRES

20. Was Directional Survey Made: YES

21. Type Electric and Other Logs Run
SDL-DSN-DLL-MSFL, GR-DSN, GR-CCL

22. Was Well Cored: NO

23. CASING RECORD (Report all Strings set in well)

CASING SIZE	WEIGHT LB./FT.	DEPTH SET	HOLE SIZE	CEMENT RECORD	AMOUNT PULLED
8	24#	1530'	11	CL-C 625 SX, CIRC 97	
5 1/2	15.5#	4850'	7 7/8	CL-H 800 SX, CIRC 84	

24. LINER RECORD

SIZE	TOP	BOTTOM	SACKS CEMENT	SCREEN

25. TUBING RECORD

SIZE	DEPTH SET	PACKER SET
2 3/8"	4230'	4233'

26. Perforation record (interval, size, and number)
4290'-4398', 4302'-4306', 4312'-4314', 4348'-4349', 4352'-4357', 4362'-4364', 4390'-4398', 4402'-4407', 4410'-4414', 4416'-4420', 4428'-4432', 4435'-4438', 4441'-4442', 4445'-4446', 4448'-4454', 4456'-4458', 4460'-4474', 4477'-4481', 4483'-4484', 4485'-4492', 4496'-4505', 4507'-4508', 4510'-4514', 4517'-4528', 4530'-4534', 4540'-4541', 4546'-4548', 4551'-4553', 4556'-4561', 4565'-4568', 4569'-4575', 4579'-4586', 4591'-4598', 4601'-4602', 4607'-4626', 4628'-4636', 4640'-4653', 4659'-4675, 4677'-4680' (120)

27. ACID, SHOT, FRACTURE, CEMENT, SQUEEZE, ETC.

DEPTH INTERVAL	AMOUNT AND KIND MATERIAL USED
4290'-4680'	ACID - 20000 GALS 15% HCL NEFE

28. PRODUCTION

Date First Production	Production Method (Flowing, gas lift, pumping - size and type pump)	Well Status (Prod. or Shut-in)
		SHUT-IN

Date of Test	Hours tested	Choke Size	Prod'n For Test Period	Oil - Bbl.	Gas - MCF	Water - Bbl.	Gas - Oil Ratio

Flow Tubing Press.	Casing Pressure	Calculated 24-Hour Rate	Oil - Bbl.	Gas - MCF	Water - Bbl.	Oil Gravity - API -(Corr.)

29. Disposition of Gas (Sold, used for fuel, vented, etc.)

Test Witnessed By: HOLLICE GRAY

30. List Attachments: Directional Survey

I hereby certify that the information on both sides of this form is true and complete to the best of my knowledge and belief.

SIGNATURE [signature] TITLE Engr Asst DATE 4/10/95

TYPE OR PRINT NAME Monte C. Duncan Telephone No. 397-0418

Received APR 1995 Texaco Hobbs Area

DeSoto/Nichols 10-94 ver 2.0

Submit to Appropriate District Office
State Lease - 6 copies
Fee Lease - 5 copies

DISTRICT I
P.O. Box 1980, Hobbs, NM 88240
DISTRICT II
P.O. Box Drawer DD, Artesia, NM 88210
DISTRICT III
1000 Rio Brazos Rd., Aztec, NM 87410

State of New Mexico
Energy, Minerals and Natural Resources Department

OIL CONSERVATION DIVISION

P.O. Box 2088
Santa Fe, New Mexico 87504-2088

Form C-105
Revised 1-1-89

WELL API NO. 30-025-32807
5. Indicate Type of Lease: STATE ☒ FEE ☐
6. State Oil / Gas Lease: B-1113-1

WELL COMPLETION OR RECOMPLETION REPORT AND LOG

1a. Type of Well: OIL WELL ☒ GAS WELL ☐ DRY ☐ OTHER _____
b. Type of Completion: NEW WELL ☒ WORKOVER ☐ DEEPEN ☐ PLUG BACK ☐ DIFF RES. ☐ OTHER

7. Lease Name or Unit Agreement Name: CENTRAL VACUUM UNIT

2. Name of Operator: TEXACO EXPLORATION & PRODUCTION INC.
8. Well No. 203
3. Address of Operator: P.O. BOX 730, HOBBS, NM 88240
9. Pool Name or Wildcat: VACUUM GRAYBURG SAN ANDRES

4. Well Location
Unit Letter F : 1913 Feet From The NORTH Line and 2476 Feet From The WEST Line
Section 6 Township 18-S Range 35-E NMPM LEA COUNTY

10. Date Spudded	11. Date T.D. Reached	12. Date Compl. (Ready to Prod.)	13. Elevations (DF & RKB, RT, GR, etc.)	14. Elev. Cashead
2/10/95	2/17/95	3/4/95	3977' GR	3977'

15. Total Depth	16. Plug Back T.D.	17. If Mult. Compl. How Many Zones?	18. Intervals Drilled By	Rotary Tools	Cable Tools
4850'	4703'			0'-4850'	-

19. Producing Interval(s), of this completion - Top, Bottom, Name
4263'-4686' VACUUM GRAYBURG SAN ANDRES
20. Was Directional Survey Made: YES

21. Type Electric and Other Logs Run
DLL-MSFL, SDDS-NEUTRON-GR-CAL, COMPUTER LOG,GR-CCL
22. Was Well Cored: NO

23. CASING RECORD (Report all Strings set in well)

CASING SIZE	WEIGHT LB./FT.	DEPTH SET	HOLE SIZE	CEMENT RECORD	AMOUNT PULLED
8 5/8	24#	1520'	11	CL-C 650 SX, CIRC 100	
5 1/2	15.5#	4850'	7 7/8	CL-H 700 SX, CIRC 0	

24. LINER RECORD

SIZE	TOP	BOTTOM	SACKS CEMENT	SCREEN

25. TUBING RECORD

SIZE	DEPTH SET	PACKER SET
2 7/8"	4682'	-

26. Perforation record (interval, size, and number)
4263'-4265', 4276'-4281', 4310'-4317', 4319'-4324', 4331'-4335', 4338'-4342', 4344'-4356', 4383'-4387', 4409'-4411', 4415'-4418', 4422'-4430', 4432'-4446', 4451'-4458', 4460'-4486', 4473'-4478', 4487'-4495', 4499'-4516', 4522'-4558', 4561'-4583', 4565'-4570', 4578'-4590', 4593'-4595', 4610'-4613', 4617'-4632', 4639'-4644', 4647'-4649', 4656'-4658', 4672'-4673', 4675'-4677', 4686'-4686' (400 HOLES)

27. ACID, SHOT, FRACTURE, CEMENT, SQUEEZE, ETC.

DEPTH INTERVAL	AMOUNT AND KIND MATERIAL USED
4263'-4686'	ACID - 20000 GALS 15% HCL NEFE

28. PRODUCTION

Date First Production	Production Method (Flowing, gas lift, pumping - size and type pump)	Well Status (Prod. or Shut-in)
3/4/95	PUMPING 2 1/2" X 1 3/4" X 24' ROD PUMP	PROD.

Date of Test	Hours tested	Choke Size	Prod'n For Test Period	Oil - Bbl.	Gas - MCF	Water - Bbl.	Gas - Oil Ratio
3/8/95	24			308	125	73	408

Flow Tubing Press.	Casing Pressure	Calculated 24-Hour Rate	Oil - Bbl.	Gas - MCF	Water - Bbl.	Oil Gravity - API - (Corr.)
						38.5

29. Disposition of Gas (Sold, used for fuel, vented, etc.)
SOLD
Test Witnessed By
HOLICE CLAY

List Attachments: DEVIATION SURVEY

31. I hereby certify that the information on both sides of this form is true and complete to the best of my knowledge and belief.

SIGNATURE [signature] TITLE Engr Asst DATE 4/6/95
TYPE OR PRINT NAME Monte C. Duncan Telephone No. 397-0418

Received
APR 1995
Texaco
Hobbs Area

INSTRUCTIONS

This form is to be filed with the appropriate District Office of the Division not later than 20 days after the completion of any newly-drilled or deepened well. It shall be accompanied by one copy of all electrical and radio-activity logs run on the well and a summary of all special tests conducted, including drill stem tests. All depths reported shall be measured depths. In the case of directionally drilled wells, true vertical depths shall be reported. For multiple completions, Items 25 through 29 shall be reported for each zone. The form is to be filed in quintuplicate except on state land, where six copies are required. See Rule 1105.

INDICATE FORMATION TOPS IN CONFORMANCE WITH GEOGRAPHICAL SECTION OF STATE

Southeastern New Mexico			Northwestern New Mexico	
T. Anhy	1440'	T. Canyon	T. Ojo Alamo	T. Penn "B"
T. Salt	1567'	T. Strawn	T. Kirtland-Fruitland	T. Penn "C"
B. Salt	2645'	T. Atoka	T. Pictured Cliffs	T. Penn "D"
T. Yates	2829'	T. Miss	T. Cliff House	T. Leadville
T. 7 Rivers	3142'	T. Devonian	T. Menefee	T. Madison
T. Queen	3712'	T. Silurian	T. Point Lookout	T. Elbert
T. Grayburg	4035'	T. Montoya	T. Mancos	T. McCracken
T. San Andres	4310'	T. Simpson	T. Gallup	T. Ignacio Otzte
T. Glorieta		T. McKee	T. Base Greenhorn	T. Granite
T. Paddock		T. Ellenburger	T. Dakota	T.
T. Blinebry		T. Gr. Wash	T. Morrison	T.
T. Tubb		T. Delaware Sand	T. Todilto	T.
T. Drinkard		T. Bone Springs	T. Entrada	T.
T. Abo		T.	T. Wingate	T.
T. Wolfcamp		T.	T. Chinle	T.
T. Penn		T.	T. Permian	T.
T. Cisco (Bough C)		T.	T. Penn "A"	T.

OIL OR GAS SANDS OR ZONES

No. 1, from	4230'	to 4363'	No. 3, from		to
No. 2, from	4405'	to 4695'	No. 4, from		to

IMPORTANT WATER SANDS

Include data on rate of water inflow and elevation to which water rose in the hole.

No. 1, from	to	feet
No. 2, from	to	feet
No. 3, from	to	feet

LITHOLOGY RECORD (Attach additional sheet if necessary)

From	To	Thickness in Feet	Lithology	From	To	Thickness in Feet	Lithology
0'	1460'	1460'	SS, SHALE				
1460'	1567'	107'	ANHYDRITE				
1567'	2645'	1078'	SALT				
2645'	2829'	184'	ANHYDRITE, DOLOMITE				
2829'	4035'	1206'	ANHYDRITE,DOLOMITE, SS				
4035'	4850'	815'	ANHYDRITE, DOLOMITE, LIME				

DeSoto/Nichols 10-94 ver 2.0

Submit to Appropriate District Office
State Lease - 6 copies
Fee Lease - 5 copies

DISTRICT I
P.O. Box 1980, Hobbs, NM 88240
DISTRICT II
P.O. Box Drawer DD, Artesia, NM 88210
DISTRICT III
1000 Rio Brazos Rd., Aztec, NM 87410

State of New Mexico
Energy, Minerals and Natural Resources Department

OIL CONSERVATION DIVISION

P.O. Box 2088
Santa Fe, New Mexico 87504-2088

Form C-105
Revised 1-1-89

WELL API NO. 30-025-32792

5. Indicate Type of Lease: STATE ☒ FEE ☐

6. State Oil / Gas Lease: B-1113-1

WELL COMPLETION OR RECOMPLETION REPORT AND LOG

1a. Type of Well: OIL WELL ☒ GAS WELL ☐ DRY ☐ OTHER

b. Type of Completion: NEW WELL ☒ WORKOVER ☐ DEEPEN ☐ PLUG BACK ☐ DIFF RES. ☐ OTHER

7. Lease Name or Unit Agreement Name: CENTRAL VACUUM UNIT

2. Name of Operator: TEXACO EXPLORATION & PRODUCTION INC.

8. Well No. 204

3. Address of Operator: P.O. BOX 730, HOBBS, NM 88240

9. Pool Name or Wildcat: VACUUM GRAYBURG SAN ANDRES

4. Well Location
Unit Letter E : 1994 Feet From The NORTH Line and 1073 Feet From The WEST Line
Section 6 Township 18-S Range 35-E NMPM LEA COUNTY

10. Date Spudded	11. Date T.D. Reached	12. Date Compl. (Ready to Prod.)	13. Elevations (DF & RKB, RT, GR, etc.)	14. Elev. Cashead
2/6/95	2/11/95	2/19/95	3997' GR	3997'

15. Total Depth	16. Plug Back T.D.	17. If Mult. Compl. How Many Zones?	18. Intervals Drilled By	Rotary Tools	Cable Tools
4850'	4793'			0-4850'	-

19. Producing Interval(s), of this completion - Top, Bottom, Name
4221'-4702' VACUUM GRAYBURG SAN ANDRES

20. Was Directional Survey Made: YES

21. Type Electric and Other Logs Run
DLL-MSFL, SDDS-NEUTRON-GR-CAL, COMPUTER LOG,GR-CCL

22. Was Well Cored: NO

23. CASING RECORD (Report all Strings set in well)

CASING SIZE	WEIGHT LB./FT.	DEPTH SET	HOLE SIZE	CEMENT RECORD	AMOUNT PULLED
8 5/8	24#	1548'	11	CL-C 550 SX, CIRC 192	
5 1/2	15.5#	4850'	7 7/8	CL-H 950 SX, CIRC 100	

24. LINER RECORD

SIZE	TOP	BOTTOM	SACKS CEMENT	SCREEN

25. TUBING RECORD

SIZE	DEPTH SET	PACKER SET
2 7/8"	4787'	-

26. Perforation record (Interval, size, and number)
4221'-4223', 4225'-4232', 4234'-4241', 4244'-4254', 4288'-4298', 4336'-4344', 4347'-4350', 4354'-4357', 4358'-4361', 4363'-4365', 4367'-4370', 4390'-4401', 4407'-4410', 4414'-4416', 4420'-4423', 4425'-4447', 4449'-4452', 4467'-4474', 4475'-4479', 4480'-4486', 4490'-4515', 4516'-4531', 4533'-4538', 4543'-4560', 4562'-4571', 4573'-4589', 4594'-4607', 4609'-4616', 4625'-4637', 4639'-4641', 4643'-4646', 4649'-4658', 4663'-4665', 4673'-4677', 4679'-4681', 4683'-4677', 4681'-4683', 4700'-4702' (310 HOLES)

27. ACID, SHOT, FRACTURE, CEMENT, SQUEEZE, ETC.

DEPTH INTERVAL	AMOUNT AND KIND MATERIAL USED
4221'-4702'	ACID - 27000 GALS 15% HCL NEFE

28. PRODUCTION

Date First Production: 2/19/95
Production Method (Flowing, gas lift, pumping - size and type pump): PUMPING 2 1/2" X 1 3/4" X 24' ROD PUMP
Well Status (Prod. or Shut-in): PROD.

Date of Test	Hours Tested	Choke Size	Prod'n For Test Period	Oil - Bbl.	Gas - MCF	Water - Bbl.	Gas - Oil Ratio
2/27/95	24			82	24	160	293

Flow Tubing Press.	Casing Pressure	Calculated 24-Hour Rate	Oil - Bbl.	Gas - MCF	Water - Bbl.	Oil Gravity - API (Corr.)
						36

29. Disposition of Gas (Sold, used for fuel, vented, etc.)
SOLD

Test Witnessed By: HOLLICE DAVIS

List Attachments: DEVIATION SURVEY

I hereby certify that the information on both sides of this form is true and complete to the best of my knowledge and belief.

SIGNATURE [signature] TITLE Engr Asst DATE 3/6/95

TYPE OR PRINT NAME Monte C. Duncan Telephone No. 397-0418

Received
Texaco
Hobbs Area
MAR 1995

DeSoto/Nichols 10-94 ver 2.0

INSTRUCTIONS

This form is to be filed with the appropriate District Office of the Division not later than 20 days after the completion of any newly-drilled or deepened well. It shall be accompanied by one copy of all electrical and radio-activity logs run on the well and a summary of all special tests conducted, including drill stem tests. All depths reported shall be measured depths. In the case of directionally drilled wells, true vertical depths shall be reported. For multiple completions, Items 25 through 29 shall be reported for each zone. The form is to be filed in quintuplicate except on state land, where six copies are required. See Rule 1105.

INDICATE FORMATION TOPS IN CONFORMANCE WITH GEOGRAPHICAL SECTION OF STATE

Southeastern New Mexico			Northwestern New Mexico	
T. Anhy	1410'	T. Canyon	T. Ojo Alamo	T. Penn "B"
T. Salt	1540'	T. Strawn	T. Kirtland-Fruitland	T. Penn "C"
B. Salt	2620'	T. Atoka	T. Pictured Cliffs	T. Penn "D"
T. Yates	2804'	T. Miss	T. Cliff House	T. Leadville
T. 7 Rivers	3117'	T. Devonian	T. Menefee	T. Madison
T. Queen	3882'	T. Silurian	T. Point Lookout	T. Elbert
T. Grayburg	4006'	T. Montoya	T. Mancos	T. McCracken
T. San Andres	4282'	T. Simpson	T. Gallup	T. Ignacio Otzte
T. Glorieta		T. McKee	T. Base Greenhorn	T. Granite
T. Paddock		T. Ellenburger	T. Dakota	T.
T. Blinebry		T. Gr. Wash	T. Morrison	T.
T. Tubb		T. Delaware Sand	T. Todilto	T.
T. Drinkard		T. Bone Springs	T. Entrada	T.
T. Abo		T.	T. Wingate	T.
T. Wolfcamp		T.	T. Chinle	T.
T. Penn		T.	T. Permian	T.
T. Cisco (Bough C)		T.	T. Penn "A"	T.

OIL OR GAS SANDS OR ZONES

No. 1, from 4226'	to 4315'	No. 3, from	to
No. 2, from 4380'	to 4695'	No. 4, from	to

IMPORTANT WATER SANDS

Include data on rate of water inflow and elevation to which water rose in the hole.

No. 1, from	to	feet
No. 2, from	to	feet
No. 3, from	to	feet

LITHOLOGY RECORD (Attach additional sheet if necessary)

From	To	Thickness In Feet	Lithology	From	To	Thickness In Feet	Lithology
0'	1410'	1410'	SS, SHALE				
1410'	1540'	130'	ANHYDRITE				
1540'	2620'	1080'	SALT				
2620'	2804'	184'	ANHYDRITE, DOLOMITE				
2804'	4006'	1204'	ANHYDRITE,DOLOMITE, SS				
4006'	4850'	842'	ANHYDRITE, DOLOMITE, LIME				

DeSoto/Nichols 10-94 ver 2.0

Submit to Appropriate District Office
State Lease - 6 copies
Fee Lease - 5 copies

DISTRICT I
P.O. Box 1980, Hobbs, NM 88240
DISTRICT II
P.O. Box Drawer DD, Artesia, NM 88210
DISTRICT III
1000 Rio Brazos Rd., Aztec, NM 87410

State of New Mexico
Energy, Minerals and Natural Resources Department

OIL CONSERVATION DIVISION
P.O. Box 2088
Santa Fe, New Mexico 87504-2088

Form C-105
Revised 1-1-89

WELL API NO. 30-025-32909
5. Indicate Type of Lease: STATE ☒ FEE ☐
6. State Oil / Gas Lease: B-1113-1

WELL COMPLETION OR RECOMPLETION REPORT AND LOG

1a. Type of Well: OIL WELL ☐ GAS WELL ☐ DRY ☐ OTHER INJECTION
b. Type of Completion: NEW WELL ☒ WORKOVER ☐ DEEPEN ☐ PLUG BACK ☐ DIFF RES. ☐ OTHER
7. Lease Name or Unit Agreement Name: CENTRAL VACUUM UNIT
2. Name of Operator: TEXACO EXPLORATION & PRODUCTION INC.
8. Well No. 207
3. Address of Operator: P.O. BOX 730, HOBBS, NM 88240
9. Pool Name or Wildcat: VACUUM GRAYBURG SAN ANDRES
4. Well Location
Unit Letter F : 2500 Feet From The NORTH Line and 1825 Feet From The WEST Line
Section 6 Township 18-S Range 35-E NMPM LEA COUNTY

10. Date Spudded	11. Date T.D. Reached	12. Date Compl. (Ready to Prod.)	13. Elevations (DF & RKB, RT, GR, etc.)	14. Elev. Cashead
3/15/95	3/20/95	3/31/95	3979' GR	3979'

15. Total Depth	16. Plug Back T.D.	17. If Mult. Compl. How Many Zones?	18. Intervals Drilled By	Rotary Tools	Cable Tools
4850'	4786'			0-4850'	-

19. Producing Interval(s), of this completion - Top, Bottom, Name: 4256'-4678' VACUUM GRAYBURG SAN ANDRES
20. Was Directional Survey Made: YES
21. Type Electric and Other Logs Run: DLL-MSFL, DSN, FDC, GR-DSN, GR-CCL
22. Was Well Cored: NO

23. CASING RECORD (Report all Strings set in well)

CASING SIZE	WEIGHT LB./FT.	DEPTH SET	HOLE SIZE	CEMENT RECORD	AMOUNT PULLED
8 5/8	24#	1520'	11	CL-C 525 SX, CIRC 93	
5 1/2	15.5#	4850'	7 7/8	CL-H 912 SX, CIRC 145	

24. LINER RECORD

SIZE	TOP	BOTTOM	SACKS CEMENT	SCREEN

25. TUBING RECORD

SIZE	DEPTH SET	PACKER SET
2 3/8"	4199'	4202'

26. Perforation record (interval, size, and number)
4256'-4258', 4262'-4263', 4267'-4268', 4269'-4271', 4272'-4282', 4308'-4313', 4317'-4328', 4355'-4362', 4364'-4377', 4405'-4406', 4408'-4414', 4418'-4431', 4435'-4437', 4443'-4444', 4447'-4452', 4464'-4472', 4483'-4487', 4492'-4500', 4502'-4516', 4519'-4520', 4524'-4533', 4535'-4552', 4556'-4562', 4565'-4579', 4584'-4586', 4591'-4593', 4599'-4603', 4605'-4611', 4622'-4624', 4633'-4635', 4637'-4641', 4649'-4653', 4656'-4658', 4666'-4667', 4669'-4671', 4674'-4676' (90)

27. ACID, SHOT, FRACTURE, CEMENT, SQUEEZE, ETC.

DEPTH INTERVAL	AMOUNT AND KIND MATERIAL USED
4256'-4678'	ACID - 20,000 GALS 15% HCL NEFE

28. PRODUCTION

Date First Production	Production Method (Flowing, gas lift, pumping - size and type pump)	Well Status (Prod. or Shut-in)
		SHUT-IN

Date of Test	Hours tested	Choke Size	Prod'n For Test Period	Oil - Bbl.	Gas - MCF	Water - Bbl.	Gas - Oil Ratio

Flow Tubing Press.	Casing Pressure	Calculated 24-Hour Rate	Oil - Bbl.	Gas - MCF	Water - Bbl.	Oil Gravity - API -(Corr.)

29. Disposition of Gas (Sold, used for fuel, vented, etc.)
Test Witnessed By: HOLLICE CLAY

30. List Attachments: DEVIATION SURVEY

I hereby certify that the information on both sides of this form is true and complete to the best of my knowledge and belief.

SIGNATURE Monte C. Duncan TITLE Engr Asst DATE 4/24/95
TYPE OR PRINT NAME Monte C. Duncan Telephone No. 397-0418

DeSotoRichols 10-94 ver 2.0

INSTRUCTIONS

This form is to be filed with the appropriate District Office of the Division not later than 20 days after the completion of any newly-drilled or deepened well. It shall be accompanied by one copy of all electrical and radio-activity logs run on the well and a summary of all special tests conducted, including drill stem tests. All depths reported shall be measured depths. In the case of directionally drilled wells, true vertical depths shall be reported. For multiple completions, Items 25 through 29 shall be reported for each zone. The form is to be filed in quintuplicate except on state land, where six copies are required. See Rule 1105.

INDICATE FORMATION TOPS IN CONFORMANCE WITH GEOGRAPHICAL SECTION OF STATE

Southeastern New Mexico			Northwestern New Mexico	
T. Anhy	1440'	T. Canyon	T. Ojo Alamo	T. Penn "B"
T. Salt	1558'	T. Strawn	T. Kirtland-Fruitland	T. Penn "C"
B. Salt	2850'	T. Atoka	T. Pictured Cliffs	T. Penn "D"
T. Yates	2831'	T. Miss	T. Cliff House	T. Leadville
T. 7 Rivers	3147'	T. Devonian	T. Menefee	T. Madison
T. Queen	3712'	T. Silurian	T. Point Lookout	T. Elbert
T. Grayburg	4038'	T. Montoya	T. Mancos	T. McCracken
T. San Andres	4300'	T. Simpson	T. Gallup	T. Ignacio Otzte
T. Glorieta		T. McKee	T. Base Greenhorn	T. Granite
T. Paddock		T. Ellenburger	T. Dakota	T.
T. Blinebry		T. Gr. Wash	T. Morrison	T.
T. Tubb		T. Delaware Sand	T. Todilto	T.
T. Drinkard		T. Bone Springs	T. Entrada	T.
T. Abo		T.	T. Wingate	T.
T. Wolfcamp		T.	T. Chinle	T.
T. Penn		T.	T. Permian	T.
T. Cisco (Bough C)		T.	T. Penn "A"	T.

OIL OR GAS SANDS OR ZONES

No. 1, from 4255'	to 4360'	No. 3, from	to
No. 2, from 4405'	to 4678'	No. 4, from	to

IMPORTANT WATER SANDS

Include data on rate of water inflow and elevation to which water rose in the hole.

No. 1, from	to	feet
No. 2, from	to	feet
No. 3, from	to	feet

LITHOLOGY RECORD (Attach additional sheet if necessary)

From	To	Thickness In Feet	Lithology	From	To	Thickness In Feet	Lithology
0'	1440'	1440'	SS, SHALE				
1440'	1558'	128'	ANHYDRITE				
1558'	2850'	1062'	SALT				
2850'	2831'	181'	ANHYDRITE, DOLOMITE				
2831'	4038'	207'	ANHYDRITE,DOLOMITE, SS				
4038'	4850'	812'	ANHYDRITE, DOLOMITE, LIME				

DeSoto/Nichols 10-94 ver 2.0

Submit to Appropriate District Office
State Lease - 6 copies
Fee Lease - 5 copies

DISTRICT I
P.O. Box 1980, Hobbs, NM 88240
DISTRICT II
P.O. Box Drawer DD, Artesia, NM 88210
DISTRICT III
1000 Rio Brazos Rd., Aztec, NM 87410

State of New Mexico
Energy, Minerals and Natural Resources Department

OIL CONSERVATION DIVISION

P.O. Box 2088
Santa Fe, New Mexico 87504-2088

Form C-105
Revised 1-1-89

WELL API NO. 30-025-32610

5. Indicate Type of Lease: STATE ☒ FEE ☐

6. State Oil / Gas Lease: B-1306

WELL COMPLETION OR RECOMPLETION REPORT AND LOG

1a. Type of Well: OIL WELL ☐ GAS WELL ☐ DRY ☐ OTHER INJECTION

b. Type of Completion: NEW WELL ☒ WORKOVER ☐ DEEPEN ☐ PLUG BACK ☐ DIFF RES. ☐ OTHER

7. Lease Name or Unit Agreement Name: CENTRAL VACUUM UNIT

2. Name of Operator: TEXACO EXPLORATION & PRODUCTION INC.

8. Well No. 244

3. Address of Operator: P.O. BOX 730, HOBBS, NM 88240

9. Pool Name or Wildcat: VACUUM GRAYBURG SAN ANDRES

4. Well Location

Unit Letter B : 10 Feet From The NORTH Line and 1930 Feet From The EAST Line

Section 6 Township 18-S Range 35-E NMPM LEA COUNTY

10. Date Spudded	11. Date T.D. Reached	12. Date Compl. (Ready to Prod.)	13. Elevations (DF & RKB, RT, GR, etc.)	14. Elev. Cashead
2/27/95	3/3/95	3/19/95	3973' GR	3973'

15. Total Depth	16. Plug Back T.D.	17. If Mult. Compl. How Many Zones?	18. Intervals Drilled By	Rotary Tools	Cable Tools
4850'	4798'			0-4850'	-

19. Producing Interval(s), of this completion - Top, Bottom, Name: 4275'-4666' VACUUM GRAYBURG SAN ANDRES

20. Was Directional Survey Made: YES

21. Type Electric and Other Logs Run: GR-DLL-MSFL, GR-DSN-SDL-CAL, GR-DSN

22. Was Well Cored: NO

23. CASING RECORD (Report all Strings set in well)

CASING SIZE	WEIGHT LB./FT.	DEPTH SET	HOLE SIZE	CEMENT RECORD	AMOUNT PULLED
8 5/8	24#	1521'	11	CL-C 525 SX, CIRC 61	
5 1/2	15.5#	4850'	7 7/8	CL-H 827 SX, CIRC 87	

24. LINER RECORD

SIZE	TOP	BOTTOM	SACKS CEMENT	SCREEN

25. TUBING RECORD

SIZE	DEPTH SET	PACKER SET
2 3/8"	4263'	4265'

26. Perforation record (interval, size, and number)

4275'-4279', 4288'-4298', 4331'-4336', 4344'-4347', 4356'-4361', 4364'-4371', 4374'-4378', 4381'-4383', 4386'-4388', 4414'-4417', 4422'-4425', 4429'-4434', 4439'-4447', 4450'-4452', 4454'-4456', 4476'-4477', 4493'-4495', 4513'-4519', 4524'-4542', 4545'-4547', 4551'-4557', 4559'-4563', 4566'-4574', 4576'-4594', 4599'-4602', 4607'-4610', 4613'-4616', 4619'-4621', 4644'-4666' (404 HOLES)

27. ACID, SHOT, FRACTURE, CEMENT, SQUEEZE, ETC.

DEPTH INTERVAL	AMOUNT AND KIND MATERIAL USED
4275'-4593'	ACID - 16000 GALS 15% HCL NEFE

28. PRODUCTION

Date First Production	Production Method (Flowing, gas lift, pumping - size and type pump)	Well Status (Prod. or Shut-in)
		SHUT-IN

Date of Test	Hours tested	Choke Size	Prod'n For Test Period	Oil - Bbl.	Gas - MCF	Water - Bbl.	Gas - Oil Ratio

Flow Tubing Press.	Casing Pressure	Calculated 24-Hour Rate	Oil - Bbl.	Gas - MCF	Water - Bbl.	Oil Gravity - API -(Corr.)

29. Disposition of Gas (Sold, used for fuel, vented, etc.)

Test Witnessed By: HOLLICE CLAY

30. List Attachments: Deviation Survey

I hereby certify that the information on both sides of this form is true and complete to the best of my knowledge and belief.

SIGNATURE Monte C. Duncan TITLE Engr Asst DATE 4/10/95

TYPE OR PRINT NAME Monte C. Duncan

Telephone No. 397-0418

Texaco
Hobbs Area

APR 1995
Received

District Forms 10-94 ver 2.0

STATE OF NEW MEXICO
ENERGY AND MINERALS DEPARTMENT

Form C-105
Revised 10-1-78

No. of Copies Received	
DISTRIBUTION	
SANTA FE	
FILE	
U.S.G.S.	
LAND OFFICE	
OPERATOR	

OIL CONSERVATION DIVISION

P. O. BOX 2088
SANTA FE, NEW MEXICO 87501

WELL COMPLETION OR RECOMPLETION REPORT AND LOG

5a. Indicate Type of Lease: State ☒ Fee ☐

5. State Oil & Gas Lease No.: B-1306

1a. TYPE OF WELL: OIL WELL ☒ GAS WELL ☐ DRY ☐ OTHER

b. TYPE OF COMPLETION: NEW WELL ☒ WORK OVER ☐ DEEPEN ☐ PLUG BACK ☐ DIFF. RESVR. ☐ OTHER

7. Unit Agreement Name: Central Vacuum Unit

8. Farm or Lease Name:

2. Name of Operator: Texaco Producing Inc.

9. Well No.: 302

3. Address of Operator: P.O. Box 728, Hobbs, New Mexico 88240

10. Field and Pool, or Wildcat: Vacuum Grayburg San Andre

4. Location of Well: UNIT LETTER H LOCATED 2030 FEET FROM THE North LINE AND 1310 FEET FROM THE East LINE OF SEC. 6 TWP. 18-S RGE. 35-E NMPM

12. County: Lea

13. Date Spudded	14. Date T.D. Reached	17. Date Compl. (Ready to Prod.)	18. Elevations (DF, RKB, RT, GR, etc.)	19. Elev. Cashinghead
9-19-87	10-3-87		3988' KB	3972'

20. Total Depth	21. Plug Back T.D.	22. If Multiple Compl., How Many	23. Intervals Drilled By	Rotary Tools	Cable Tools
4720	4720		→	0 - 4720'	

24. Producing Interval(s), of this completion — Top, Bottom, Name: 4320' - 4720' Grayburg - San Andres

25. Was Directional Survey Made: No

26. Type Electric and Other Logs Run: Gamma Ray - Compensated Neutron - Caliper - Casing Collar - Cement Bond

27. Was Well Cored: No

28. CASING RECORD (Report all strings set in well)

CASING SIZE	WEIGHT LB./FT.	DEPTH SET	HOLE SIZE	CEMENTING RECORD	AMOUNT PULLED
20"	169#	350'	24"	1000 sx.	
13-3/8"	54.5#	1545'	17-1/2"	1450 sx.	
9-5/8"	36, 40#	2778'	12-1/4"	1250 sx.	
7"	23#	4320'	8-3/4"	750 sx.	

29. LINER RECORD

SIZE	TOP	BOTTOM	SACKS CEMENT	SCREEN

30. TUBING RECORD

SIZE	DEPTH SET	PACKER SET

31. Perforation Record (Interval, size and number): 4320' - 4720' open hole

4/81

32. ACID, SHOT, FRACTURE, CEMENT SQUEEZE, ETC.

DEPTH INTERVAL	AMOUNT AND KIND MATERIAL USED
4320' - 4720'	7500 gals 15% NEFE acid
" "	Frac 29,750 gal. gel & 110,000 #20/40 Sd.

33. PRODUCTION

Date First Production	Production Method (Flowing, gas lift, pumping - Size and type pump)	Well Status (Prod. or Shut-in)
10-19-87	Pumping	Producing

Date of Test	Hours Tested	Choke Size	Prod'n. For Test Period	Oil - Bbl.	Gas - MCF	Water - Bbl.	Gas - Oil Ratio
11-1-87	24	Pumping	→	42	25.45	3	606

Flow Tubing Press.	Casing Pressure	Calculated 24-Hour Rate	Oil - Bbl.	Gas - MCF	Water - Bbl.	Oil Gravity - API (Corr.)
		→	42	25.45	3	38.1

34. Disposition of Gas (Sold, used for fuel, vented, etc.): Sold - Texaco Inc.

Test Witnessed By: Howard Smith

35. List of Attachments: Deviation Survey

36. I hereby certify that the information shown on both sides of this form is true and complete to the best of my knowledge and belief.

SIGNED A. Gernandt NAME A. Gernandt TITLE Area Superintendent DATE 11-5-1987

TEXACO E&P INC.
CENTRAL VACUUM UNIT NO. 302
API# 3002530023000

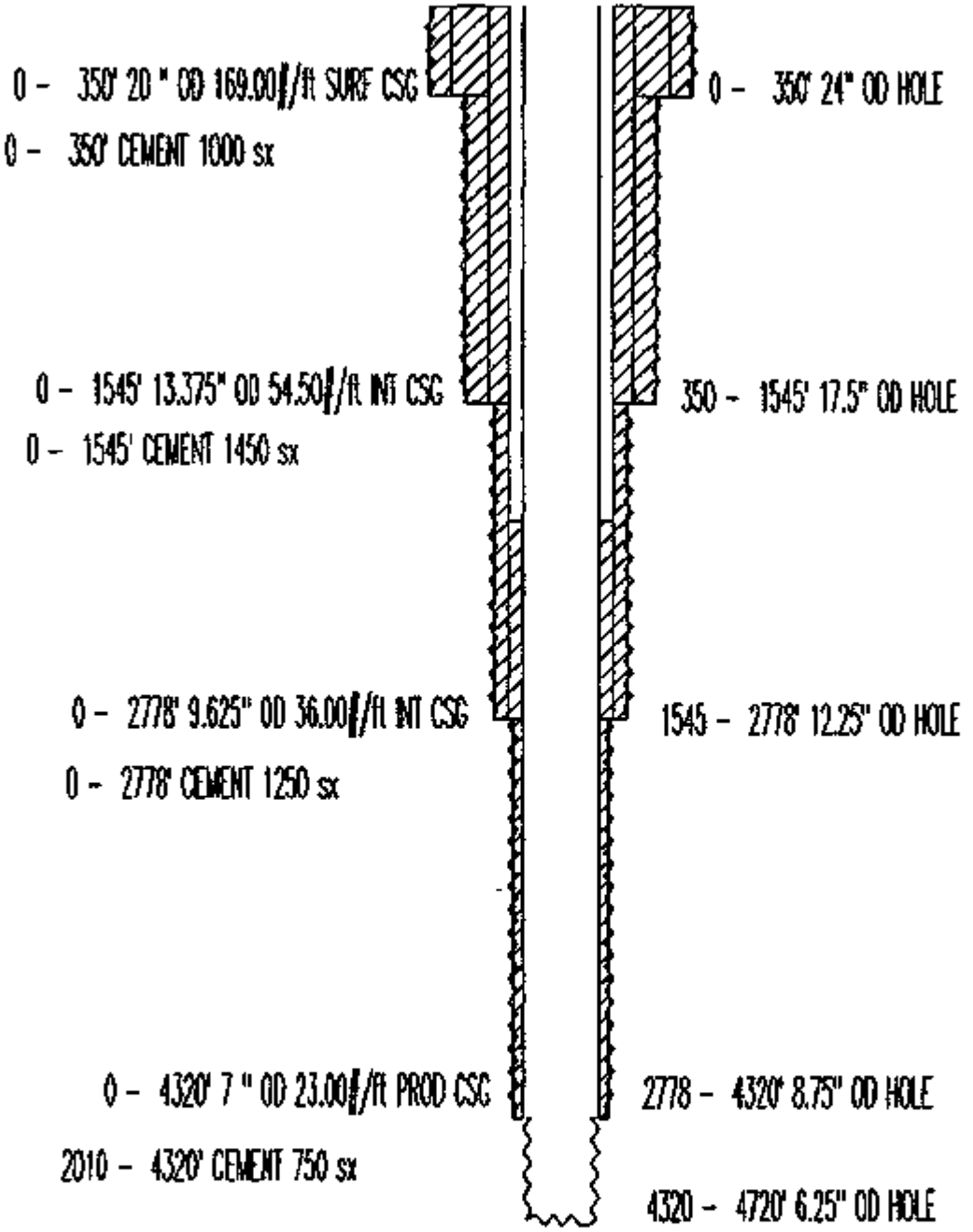

2030 FNL & 1310 FEL
SEC 6 , TWN 18 S, RANGE 35 E
ELEVATION: 3988 KB
COMPLETION DATE: 11-01-87
###
COMPLETION INTERVAL: 4320 - 4720 (GRSA)