APR 02 1997 (20) Sta. 37

ENGINEERING DATA TRANSMITTAL

Page 1 of 1

1. EDT 620255

2. To: (Receiving Organization) Distribution	3. From: (Originating Organization) SESC, Remote-Sensing & Sampling Equipment Engineering, 08E00	4. Related EDT No.: NA
5. Proj./Prog./Dept./Div.: Characterization	6. Design Authority/ Design Agent/Cog. Engr.: PF Kison	7. Purchase Order No.: NA
8. Originator Remarks: For approval		9. Equip./Component No.: NA
		10. System/Bldg./Facility: NA
11. Receiver Remarks: 11A. Design Baseline Document? [] Yes [X] No		12. Major Assm. Dwg. No.: NA
		13. Permit/Permit Application No.: NA
		14. Required Response Date: 3/27/97

15. DATA TRANSMITTED

(A) Item No.	(B) Document/Drawing No.	(C) Sheet No.	(D) Rev. No.	(E) Title or Description of Data Transmitted	(F) Approval Designator	(G) Reason for Transmittal	(H) Originator Disposition	(I) Receiver Disposition
1	HNF-SD-TWR-ETP-002	ALL	0	Eng Task Plan for Determining Breathing Rates in Single Shell Tanks Using Tracer Gas	Q	1		

16. KEY

Approval Designator (F)	Reason for Transmittal (G)		Disposition (H) & (I)	
E, S, Q, D or N/A (see WHC-CM-3-5, Sec.12.7)	1. Approval 2. Release 3. Information	4. Review 5. Post-Review 6. Dist. (Receipt Acknow. Required)	1. Approved 2. Approved w/comment 3. Disapproved w/comment	4. Reviewed no/comment 5. Reviewed w/comment 6. Receipt acknowledged

17. SIGNATURE/DISTRIBUTION
(See Approval Designator for required signatures)

(G) Reason	(H) Disp.	(J) Name	(K) Signature	(L) Date	(M) MSIN	(G) Reason	(H) Disp.	(J) Name	(K) Signature	(L) Date	(M) MSIN
1	/	Design Authority PF Kison	PF Kison	3/31/97	T4-07	1	/	Proj Eng. JA Andersen	JA Andersen	3-26-97	B4-51
~~1~~	~~/~~	~~Design Agent~~		3-31-97		1	/	Prog. Mgr. RE Bauer	RE Bauer	3/26/97	S7-14
1	/	Cog.Eng. DD Wanner	DD Wanner	3/27/97	S7-12	1	/	JL Huckaby	JL Huckaby	3/28/97	K6-80
1	/	Cog. Mgr. JS Schofield	JS Schofield	4/1/97	S7-12	1	/	WJ Kennedy	WJ Kennedy	3/27/97	S7-03
1	/	QA ML McElroy	Leon Brand	3/28/97	S7-07	1	2	GS Caprio	GS Caprio	3/27/97	S3-90
1	/	Safety JA Ranschau	JA Ranschau	3/27/97		3		Central Files			A3-88
1	/	Proj Mgr. CE Hanson	CE Hanson	3/26/97	S7-12						

18.	19.	20.	21. DOE APPROVAL (if required)
JA Andersen 3-26-97 Signature of EDT Originator / Date	RE Bauer ~~JS Schofield~~ RE Bauer 3/26/97 Authorized Representative for Receiving Organization / Date	PF Kison 3/31/97 Design Authority/ Cognizant Manager / Date	Ctrl. No. [] Approved [] Approved w/comments [] Disapproved w/comments

BD-7400-172-2 (05/96) GEF097

BD-7400-172-1

ENGINEERING TASK PLAN FOR DETERMINING BREATHING RATES IN SINGLE SHELL TANKS USING TRACER GAS

JA Andersen
SGN Eurisys Services Corporation, Richland, WA 99352
U.S. Department of Energy Contract DE-AC06-96RL13200

EDT/ECN: 620255 UC: 2070
Org Code: 08E00 Charge Code: N2012
B&R Code: EW7120074 Total Pages: ~~24~~ 23

Key Words: Engineering Task Plan, Breathing Rates, Single Shell Tanks, Tracer Gas

Abstract: The testing of single shell tanks to determine breathing rates. Inert tracer gases helium, and sulfur hexafluoride will be injected into the tanks AX-103, BY-105, C-107 and U-103. Periodic samples will be taken over a three month interval to determine actual headspace breathing rates.

APR 02 1997
DATE
STA: 37
ID

Janis Bishop 4-2-97
Release Approval Date Release Stamp

Approved for Public Release

Engineering Task Plan for Determining Breathing Rates in Single Shell Tanks Using Tracer Gases

March 1997

Author

J.A. Andersen

Table of Contents

List of Figures

Task Plan for Measuring the Breathing Rate of Twelve Tanks AX-103, BY-105, C-107, U-103, and eight other to be assigned a later date by use of Tracer Gases, Helium and Sulfur Hexafluoride

1.0 Introduction

This engineering task plan details the strategy for sampling the single shell tank (SST) head space breathing rates for tanks AX-103, BY-105, C-107, U-103 and eight tanks that will be assigned at a later date. Tank selection will be performed by Pacific Northwest National Laboratory (PNNL). Selection will be determined by factors associated with SSTs representing a specific set of conditions. Some of the conditions that could be covered are watch list tanks, cascade tanks, isolated tanks, high heat tanks, etc. Breathing rates will be calculated by measuring the decay of injected inert tracer gases into the tank headspace. The inert gases that will be used for this effort are Helium (He) and Sulfur Hexafluoride (SF6). The primary goal for this sampling is to determine the breathing rates for passively ventilated SSTs by using tracer gases as a measurement tool. The secondary goal of this sampling includes the collection of data that will improve the success in determining the breathing rates of other passively ventilated SSTs.

The end result of the tracer gas task will be a report that is provided by PNNL. This report will cover information about how the gas samples were analyzed and the results of each sample set for the specific tank. Previous work in this area took place in FY1996. Report WHC-SD-WM-TP-492 discusses how tank S-102 was used as a test case for the use of tracer gases. Tank S-102 results are discussed in PNNL letter report TWSFG 97.29 issued March 17,1997 "Preliminary Letter Report on Tank S-102 Tracer Gas Testing". The initial indications show that tracer gas data provides information that allows accurate calculations of the breathing rates for SST headspace.

2.0 Objective

The objective of this testing is to measure head space breathing rates for the selected tanks over periodic time intervals over approximately three months. This information will support the safety analysis relating to the flammable gas watch list tank and organic watch list tank Unreviewed Safety Questions (USQ).

3.0 Scope of Work

This engineering task plan specifies the requirements, responsibilities, schedule, and cost for SST ventilation breathing rate measurement by injection of tracer gases into the tank head space.

The sampling of the head space area will be performed by using a three step process. First a baseline sample will be taken. Second, tracer gases Helium (He) and sulfur hexafluoride (SF6) will be injected into the tanks. And third, periodic samples will be taken from the tank headspace. By removing a sample of tank head space gas and analyzing the amount of tracer gas decay against a baseline sample, a determination of the breathing rate can be calculated. Gas sampling and injection is not dependant on a specific riser location. The riser assignment will vary from one tank to another and will be assigned in the work package by the vapor sampling

farm cognizant engineer. To gather the sample(s) SUMMA™[1] canisters, equipped with in-line dual particulate air filters and two silica gel sorbent traps, will be used to collect the gas. See Figure 1 "Sampling Apparatus". The purpose of dual particulate air filters is to ensure no radioactive particulates are transferred to the SUMMA™ canisters. The silica gel sorbent traps will effectively eliminate any tritiated water vapor that may be present in the sample gases. PNNL shall supply the tracer gases and shall perform the analysis on the head space samples.

Ideal SST sampling conditions exist during the regions lowest temperature yearly period. The breathing rates for single shell tanks are predicted to be greatest during the months of January and February, typically the coldest temperature months in this region. The months of least breathing rate activity are expected to be during the hottest temperature summer months, July and August. The tanks will be sampled in sets of four. The first set of four tanks will be sampled starting in February, the second set of tanks will be sampled starting in May, and the third set will be sampled December of fiscal year 1998. The trend is that from the cold months the breathing rate activity diminishes over time to the low activity summer months. And then from low activity during the summer months to more activity over time to the high activity winter months.

3.1 Requirements

3.1.1 Task Inputs

Pacific Northwest National Laboratory shall supply the SUMMA™ canisters, helium, and Sulfur Hexafluoride as required.

The testing apparatus exists and will be supplied by Characterization Field Sampling of Lockheed Martin Hanford Company (LHMC).

PNNL shall assign the tanks that will be sampled. The tank selections for the first four tanks were selected for one or both of the following criteria: One, theoretically tanks with higher temperatures breath larger volumes. Two, cascading tanks are thought to breath larger volumes because of there connections with other tanks. Tanks with higher temperatures and/or tanks in a cascade set of tanks where selected. The criteria for the remaining tanks has not been determined.

A B&K measurement device will be installed on tank BY-105. The B&K measurement device provides continuous monitoring of SF6. Prior to the SUMMA™ canister sampling process being performed on BY-105 the B&K device will be installed. This will allow parallel sampling processes to be performed and compared to one another.

[1] SUMMA™ is a trademark of Moletrics, Incorporated

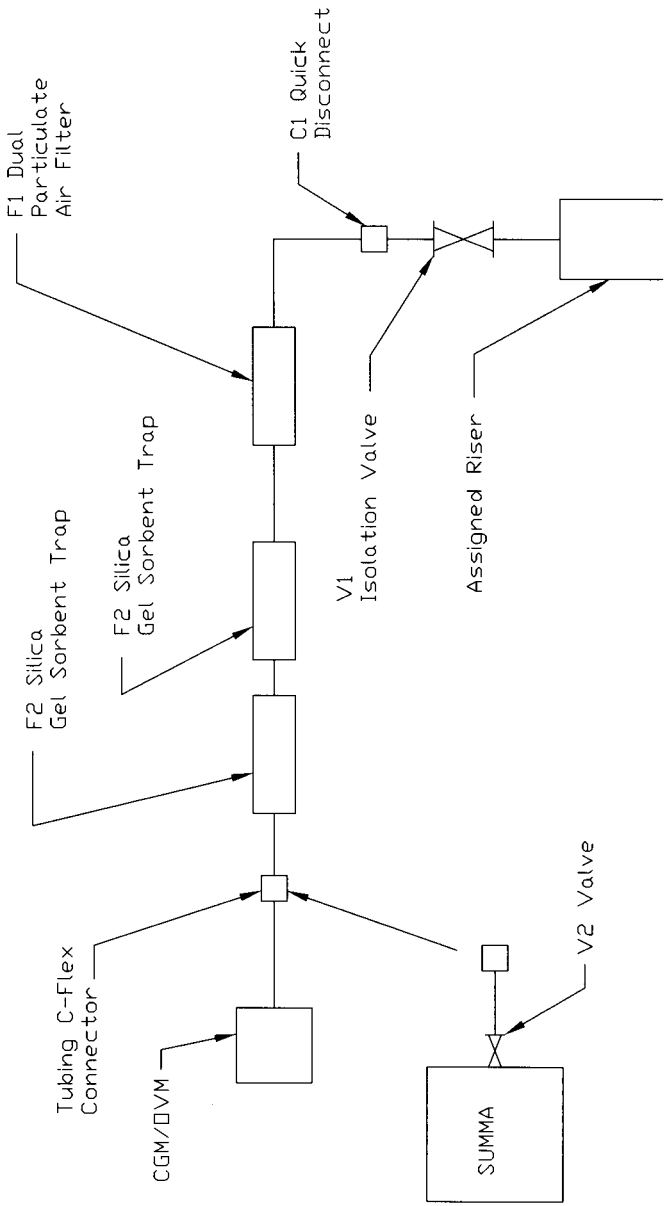

Figure 1
Sampling Apparatus

3.1.2 Task Outputs

The final output of this effort as a combined organization shall be a report that is generated by PNNL that describes the analysis of the breathing rate for each tank during the period of testing. PNNL shall perform the analysis of the tracer gas samples that are taken from this series of tanks. The results of this analysis could provide data that will determine acceptable breathing rates in passively ventilated single shell tanks.

3.1.3 Assumptions

For this effort to be successful the following are described as assumptions:

- The sample acquisition team (a multi-company effort) required to perform the tracer gas baseline, injection, and sampling will be available to perform the task at the scheduled times. This team involves personnel from different crafts, companies, and organizations. The personnel involved in the sampling team are as follows: operations, the person in charge (PIC), electrician, pipe fitter, operator, industrial hygienist, health physics technician (all of the previous are from Lockheed Martin Hanford Company[LMHC]), and up to two members from SGN Eurysis Services Corporation (SESC) Analytical and Laboratory Services team.

- Enough SUMMA™ canisters will be available during the assigned sampling periods.

- SUMMA™ canisters, when filled with a sample, will be released from the tank farm and transferred to PNNL for analysis.

- The weather will be diverse enough that the analysis from the sampling will show breathing rates consistent with weather conditions.

- PNNL shall prepare the final report.

- Funding for FY97 is adequate to complete the testing on the first eight (8) tanks.

3.1.4 Approach

The approach outlined below is to complete the task in its entirety regardless of the responsible party to complete the task. See section 9.0 Organization for responsible organizations. Once authorization has been given and the input materials provided this task shall be performed in the following steps:

1. Prepare an engineering task plan (ETP) and test plan. The test plan describes in detail how the sampling will be performed. Test plan document number is HNF-SD-WM-TP-529, rev 0.
2. Prepare and sign the USQ screening. The USQ screening is required to be in the field work package verifying that the appropriate safety issues studied and approvals to perform the work have been obtained. The USQ screening shall be written in a fashion that will allow the USQ to be used for any SST.
3. The tanks that will be used for tracer gas sampling need to be assigned. PNNL shall assign which tanks shall be used for tracer gases. At the time of this writing only the first four of

twelve tanks have been assigned (AX-103, BY-105, C-107, and U-103). The tracer gas sampling will be performed on three sets of four tanks.

4. Coordinate the work with the characterization organization.
5. Prepare and sign the field work packages required to perform the tracer gas sampling. As a part of this work a radiation work permit shall be prepared. During this period the vapor sampling cognizant engineer shall assign the riser that will be used for each tank.
6. Perform the field work associated with tracer gas sampling. This work consists of three specific elements. The first is the baseline sample. The second is the injection process. Injection includes the insertion of both helium and sulfur hexafluoride into the tank. Helium, as a tracer gas, may eventually be deleted from the sampling process. The third element is the sampling itself. Samples shall be taken at intervals of approximately one day, seven days, 30 days, and 90 days from post injection date. Additional samples maybe required as specified by PNNL.
7. Once the samples have been taken then the radiation filters in-line with the SUMMA™ canisters shall be analyzed so that the canister can be released from a sample custody secure area and shipped to PNNL.
8. PNNL shall perform the analysis for each sample. When the analysis has been completed then PNNL will draw conclusion based the data from the sampling process.
9. Initial sample results will be delivered in the form of electronic mail stating the data is preliminary and describing the data as found from the canister.
10. A final report shall be submitted by PNNL that describes the data and any conclusion that are derived, based on the sampling data. A report will be prepared and delivered after the first eight (8) tanks have been sampled, prior to the end of FY97. A second report will be prepared and delivered after the last set of four tanks have been sampled in FY98, report due May 1998.
11. Steps 3 through 9 will be repeated as the second and third set of tanks are assigned.

3.1.5 Task Criteria

A USQ screening (TF-97-0015) has been performed that determines this testing process does not violate tank safety issues. All controls identified in the appropriate authorization basis documents shall be complied with the JCS work package. Test reviews shall be performed during the pre-job and post-job briefings.

3.1.6 Sampling

Fill the SUMMA canister for a specified period of time. This calculated volume is based on the volume of the SUMMA canister and the flow rate of gas out of the SST. The SUMMA™ canisters are on the order of 6 liters. A full 6 liter volume sample is not required for a sample analysis. A minimum one liter is required for a successful sample analysis to be obtained.

Procedures LO-080-403, rev. B-0 Collection of SUMMA™ Canister Samples and LO-090-450, rev. A-0 Sample Chain of Custody, Acceptance and Disposal shall be used for obtaining the sample and for proper transfer of the sample from organization to another.

Perform the field work associated with tracer gas sampling. This work consists of three specific elements. The first is the baseline sample, at which time a set of two baseline SUMMA™

samples are collected. The second is the injection process. Injection includes the insertion of both helium (if required) and sulfur hexafluoride into the tank. The third element is the sampling itself. Approximately 24 hours (could be from 20 to 72 hours after injection) after the tracer gas injection is complete, another set of SUMMA™ canister samples will be taken. Samples sets shall be taken at intervals of seven days, 30 days, and 90 days. These time intervals are to be used as guidelines. The actual sampling day will depend on two factors. First, is coordinating the sampling event with the characterization schedule. Second, is the rate at which the tank is breathing. The breathing rates, as determined by the samples, may dictate that subsequent samples be taken on an adjusted sampling schedule. If , for example, a tank is breathing large volumes then the sampling event should be performed sooner then the next scheduled period. If the tank is breathing small volumes then the sampling event could be delayed. The exact sampling period will be determined by schedule and guidance from PNNL, the exception is the 24 hours sample. Additional samples may be required due to unforeseen circumstances that occur during the scheduled testing period (i.e. core sampling or other tank farm intrusive sampling). Again, any additional sample will be determined with guidance by PNNL.

3.1.7 Lab Analysis for Samples

The accuracy and confidence with which tank breathing rates can be specified using the tracer gases depends heavily on the accuracy of the tracer gas analysis. In order to obtain meaningful breathing rate data from samples collected at short and long intervals (i.e., 7 days and 60 days apart), the analytical methods need to be highly accurate and to have large analytical range. The analytical methods should have an estimated accuracy of +/- 5% of planned initial He concentrations, and demonstrated accuracy of +/- 10% of the measured SF6 concentration. To avoid excessive reanalysis, the analytical method for SF6 should have a precision, as measured by percent standard deviation of multiple analysis, of 5%. In order to ensure the 60-day integrated breathing rate measurements can be made, the analytical method should be capable of quantitatively measuring SF6 concentrations as low as 0.0002 times the initial concentration.

The sampling of He and SF6 shall be performed using PNNL sampling analysis documents PNL-ALO-284 for He and PNNL-SF6-97 for SF6. In addition, Hanford Analysis Services Quality Assurance and Reporting Document (HASQARD) shall be adhered to for this effort.

The helium calibration is performed with a pure helium standard, and instrument response periodically verified with a nitrogen standard. The SF6 calibration of the gas chromatography with electron capture detection undergoes an initial daily multi-point calibration. Calibration is verified periodically throughout each set of analysis by performing single-point continuing calibration checks as specified in the procedure.

3.2 Technical Basis for Tank Selection

The basis for the selection of the first set of tanks identified for testing are:

AX-103

AX-103 was selected because it is a relatively hot (35.2°C in July 95), flammable gas watch list tank in AX farm. None of the four tanks in AX farm are connected to each other via cascade lines, so breathing rates in the absence of inter-tank connections can be measured.

BY-105

BY-105 was selected primarily because it was important to the salt well pumping project. It is a warm tank (26.1°C in Jan 96) and is the middle tank of a cascade section of tanks. BY farm is an old farm where extraneous leaks may be more prevalent. BY-105 also is scheduled for installation of a SHMS gas monitor that is being investigated for use as a continuous SF6 monitoring tool. The tracer gas injection and sampling will be coordinated with the installation schedule of the SHMS cabinet on BY-105. The SHMS cabinet will contain the B&K measurement device that will provide continuous SF6 measurements. With the B&K device and the SUMMA™ canister sampling method continuous sampling can be tested.

C-107

C-107 is the hottest single shell tank (45°C in Jan. 96), and it is connected to a relatively cool tank via cascade lines. If inter-tank transfer of air is significant (and the cascade link is not blocked), C-107 should demonstrate high breathing rates.

U-103

U-103 was selected because it is projected to have a high breathing rate (about 11 cfm), based on analysis of data from the standard hydrogen monitoring system following a gas release event. It is also a flammable gas watch list tank.

3.3 Justification for Tracer Gases

Helium is inert (even in the radiation field of the head space) and essentially insoluble in waste. Helium is also very light (lighter than air), and should mix within the head space similar to hydrogen. Sulfur hexafluoride is also inert, but it may be ionized in the radiation field of the head space. In contrast to He, SF6 is a heavy gas (heavier than air).

Helium and sulfur hexafluoride will be injected into the head space of each tank through the assigned riser. See Figure 2 "Injection Apparatus". The flow rate of the tracer gases being injected into each tank will be controlled to less than 28.3 L/min (1 CFM) to ensure that the tank is not over pressurized.

An advantage of SF6 is that the range of measurable concentrations is very large. PNNL is set-up to measure SF6 concentrations between about 30 parts per trillion by volume (pptv) to 160 parts per billion by volume (ppbv), giving an usable concentration range of four orders of magnitude. This large range will allow less frequent sampling, greater flexibility in the sampling schedule, and a longer integrated measurement of the breathing rate. For example, if the initial concentration of SF6 is 160 ppbv, and the breathing rate of the tank is a relatively large 5% per day, then even after 90 days the concentration of SF6 would still be about 1600 pptv, and it wouldn't drop below the 30 pptv level until another 77 days had passed.

Figure 2
Injection Apparatus

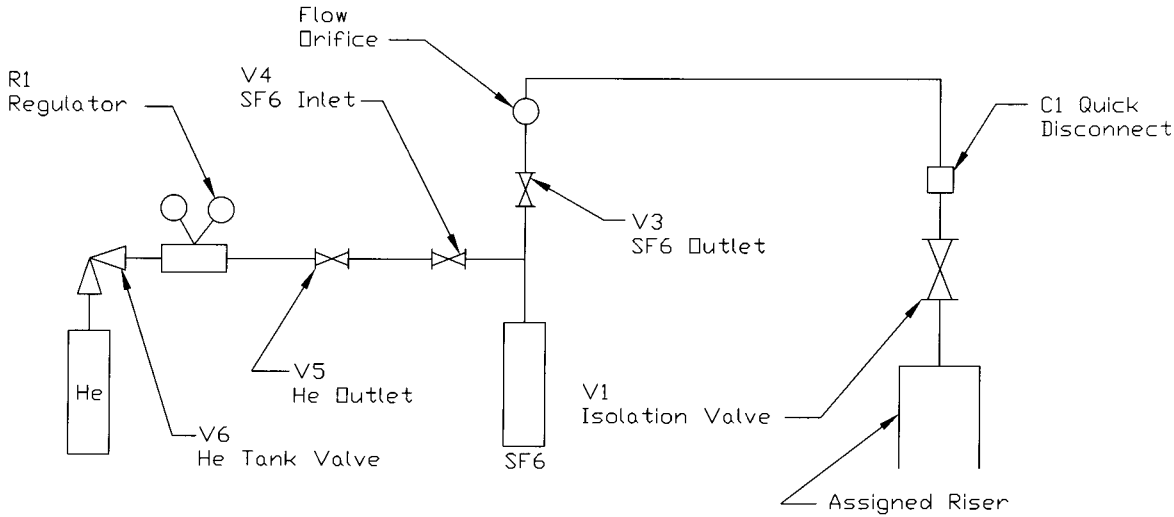

By contrast, the measurable range for He concentrations is relatively small. Introducing about 750L (25 ft^3) of helium to a typical head space would raise its concentration to about 100 ppmv. Because it is present in ambient air at about 5 ppmv, this would restrict its measurable range to only about a factor of 50. Though this would be ample if the breathing rate is due solely to barometric pressure fluctuation pumping (about 0.5% per day), in tanks where breathing is enhanced by other effects, the narrow measurement range limits the useful lifetime of He. Larger quantities of He could be released into the headspaces, but that may entail logistical (e.g., delivery, mixing) complications.

3.4 Engineering Tasks

The engineering tasks required for this effort including the completion of the task plan, test plan, USQ, and project oversight and status reports. The bulk of this effort is associated with the setup, injection, and sampling of the headspace tracer gases. See section 9.0 Organization for details of organization and companies to perform the engineering tasks. The tasks associated with the engineering of this effort include the following:

- Generate an integrated schedule, including interfacing organizations.
- Status reports.
- Characterization of the data. PNNL shall be responsible for the characterization of the data from the samples.
- Report the data. PNNL shall be responsible for writing the final report for the results of this testing.

3.5 Installation Tasks

See section 9.0 Organization for details of organization and companies to perform the installation tasks. The following installation activities are required to support the completion of this task:

- Develop and release the USQ for this scope of work.
- Develop and release the work packages for the assigned tanks.
- Integrate the schedule of the tracer gas sampling activities with the characterization master schedule.
- Develop the radiation work permit for this scope of work.
- Coordinate work activities with Tank Farm Operations to support this scheduled work.
- Field Operations. Field installation of the tracer gas equipment as required and operations of the tracer gas equipment.

3.5.1 Equipment/Facilities

To support the completion of this task equipment will be supplied by a variety of sources. The following list identifies the equipment and organization responsible for supplying the equipment:

- Tracer gas injection system (Figure 1 & 2), these diagrams show the elements that make up the test apparatus. Supplied by Lockheed Martin Hanford Company's Field Sampling organization.
- SUMMA™ Canisters supplied by PNNL
- C-Flex tubing for sampling apparatus, supplied by SESC's Analytical and laboratory Services.
- Silica gel sorbent traps (8 mm, 450 mg), supplied by SESC's Analytical and laboratory Services.
- In-line particulate air filter body, supplied by SESC's Analytical and laboratory Services.
- Particulate air filters for SUMMA™ canisters, supplied by SESC's Analytical and laboratory Services Team.
- Custody secure area to store sample media, supplied by SESC's Analytical and laboratory Services Team.
- Helium and SF6 to be supplied by PNNL.

4.0 Deliverables

Deliverable 1

Oversight of the preparation and signing of the USQ. Completed.

Deliverable 2

Prepare and sign the engineering test plan. Completed.

Deliverable 3

Prepare and sign the engineering task plan.

Deliverable 4

Oversight and coordination of the field sampling activities, which includes the baseline sample, injection, and tracer gas sampling. Field work to be completed on or before August 29, 1997.

Deliverable 5

Weekly reports to the customer.

5.0 Schedule

The tanks shall be sampled in a phased approach. The first four tanks shall have the baseline samples, be injected with the tracer gases, have the 24 hour samples, and the seven day samples taken during the month of February with the remaining samples for those tanks taken at the scheduled interval. The second set of four tanks would start the sampling period during the month of May. The last set of four tanks have been scheduled to begin their sampling period during the month of June. See Appendix A for the integrated schedule, this schedule will be of three parts, one for each set of tanks.

6.0 Cost Estimate

The estimated cost to perform this activity is $466,000. The fiscal year 1996 planning for this effort was determined to be $299,000. Because there is a $167,000 difference between the planning funded level and the estimated costs to perform this task, four (4) tanks could be deferred to fiscal year 1998 due to fiscal year 1997 budget constraints. The estimated cost does not include the funding to PNNL to perform the analysis of the samples and write the report about the data. The PNNL funding is provided separately. Following is a high level breakout of the associated costs.

Table 1. Cost Estimate for Tracer Gas Study

Organization	Estimate	Activity
SESC	$126,000	Project Management & Sampling Personnel
LMHC & Crafts	$169,000*	PIC, Operators, & Craft, Tank Farm Cog Eng
NHC	$8,000*	Vapor Sampling Cog. Eng.
Lab Analysis	$32,000*	Required lab analysis to release SUMMAs to PNNL
DESH	$5,000*	Prepare USQ
NHC (Lockrem)	$32,000*	Facility costs for SESC Sampling Personnel
QA	$5,000*	QA review of Task and Test Plan plus work packages
Total	$377,000*	Total prior to adders and G&A/CSP

Plus Adders		
SESC 14% Adder	$18,000	Charge added by Fluor-Daniels
18% G&A/CSP	$71,000*	Hanford site G&A/CSP
Grand Total	$466,000*	

* These costs reflect only estimated values.

The SESC 14% adder is a charge that is added by Fluor-Daniels Hanford (FDH) procurement to the SESC costs only. This adder is to recover the cost from the enterprise companies of occupancy, training, etc. by FDH. The G&A/CSP is added to every labor category.

7.0 Safety

The process of injecting tracer gases and removing headspace samples has been analyzed against tank farms standing order 97-01 and does not work outside the envelop for safe work conditions. The tracer gas injection system has been set-up so that it is not possible to over pressurize the tank and all samples will be protected from contamination by double Particulate air filters. The equipment being used for the testing is classified as "General Service" per WHC-CM-4-46, Section 9.0. A USQ (TF-97-0015) screening has been completed for this testing and will be included in the JCS work package.

There is a potential toxic compound of SF6. When a burning condition exists involving SF6, the compound decays to SF5 which at some levels can be toxic. The level of SF5 to be considered toxic is in the order of parts per million. After review it has been determined that, although there is potential for a toxic compound, the risk is minimal. The levels of SF6 being used in this sampling are on the order of parts per trillion, six orders of magnitude less than toxic level of SF5. In addition, SF6 is not involved in a burning condition under normal operating circumstances. Although there is a risk to personnel, the risk level is very low.

8.0 Quality Assurance

No Quality Control hold points are required during the field sampling process.

The PNNL Vapor Analytical Laboratory procedure's PNL-TVP-07 for SUMMA™ canister cleaning and PNL-TVP-02 for SUMMA canister shipping, receiving, and handling (chain-of-custody) shall be used. Analyses for He shall be performed by PNNL at a Quality Assurance Impact Level (QA-IL) II by mass spectrometry. Analyses for SF6 shall also be performed by PNNL at a (QA-IL) II by gas chromatography with electron capture detection. PNNL's use of procedure PNL-TVP-07 and PNL-TVP-02 and analysis at Impact Level II comply with HASQARD. Preliminary results shall be reported via electronic mail as they become available to Duke Engineering Services Hanford TWRS Safety Resolution. The PNNL QA Plan is "FY97 Flammable Gas QA Plan" with document number MCS-027 rev. 2.

Quality assurance shall be required for the approval of the engineering task plan, test plan, and the field work packages. Quality assurance shall perform a HASQARD assessment of the PNNL organization and laboratory.

Verification shall be used for the SUMMA™ canisters once they are filled, to track canister location and chain of command. Once the canisters are turned over to PNNL, the laboratory procedures shall be used to verify canister contents, sampling event, and data associated with that canisters.

9.0 Organization

This task shall be performed using individuals from several Hanford companies; see Figure 3, Task Organization. This multi-company effort will be performed as a single team. Following in this section are descriptions of the function each company will perform and which organization will be responsible for specific tasks.

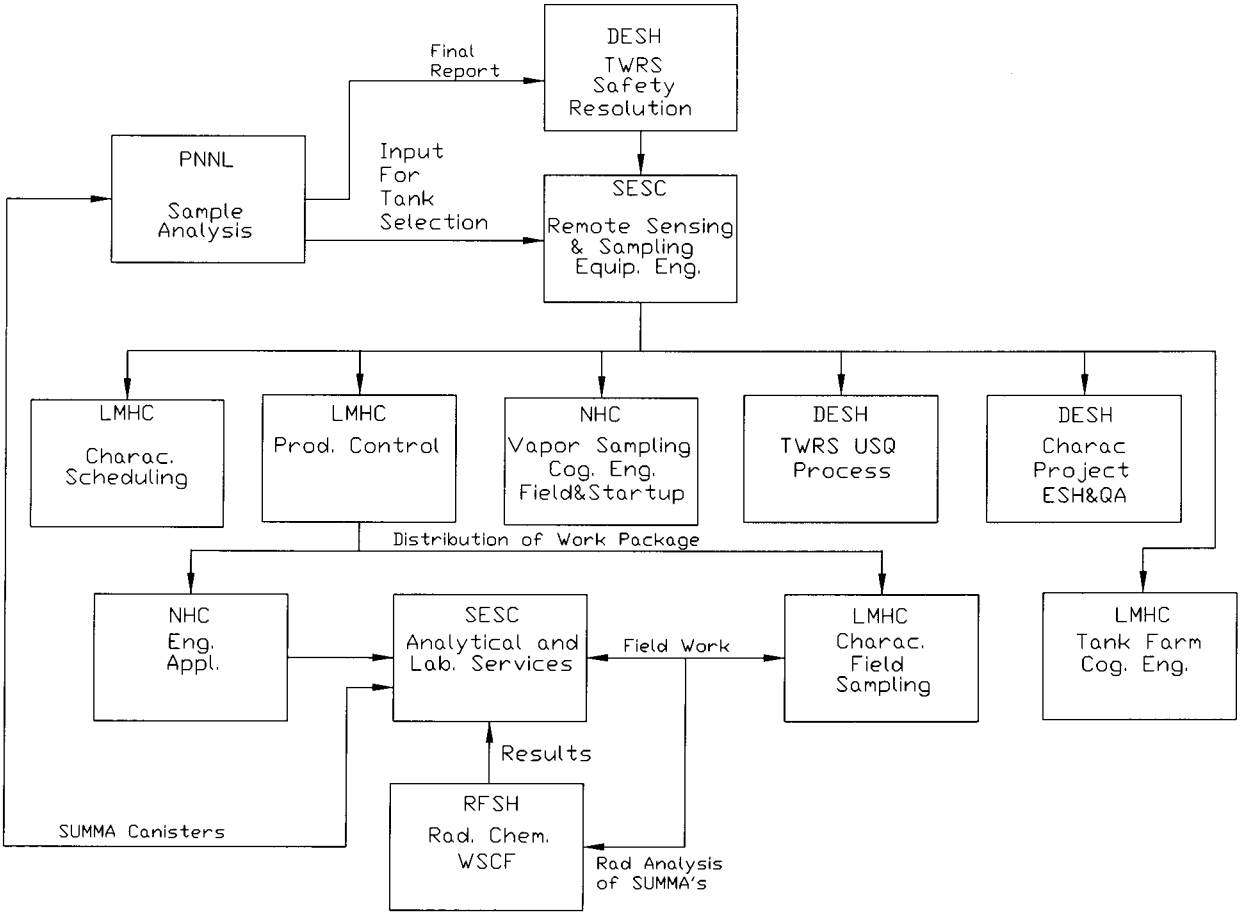

Figure 3 Task Organization

The SESC cognizant organization responsible for completing the work is the Remote Sensing and Sampling Equipment Engineering. The task lead shall perform the development of engineering task and test plans.

Remote Sensing and Sampling Equipment Engineering shall be responsible for identifying the interfacing organizations and working with Characterization Scheduling (LMHC) to develop an integrated schedule. Characterization Scheduling is responsible for the overall characterization schedule. Remote Sensing and Sampling Equipment Engineering must work with scheduling to get these activities scheduled.

Remote Sensing and Sampling Equipment shall be responsible for the preparation of status reports to the customer.

SESC's Analytical and Laboratory Services shall pickup and deliver the SUMMA™ canisters. In addition, they will perform baseline sampling, oversight of the injection, and sampling of the SST headspace. Analytical and Laboratory Services shall perform the activities to allow the release of the SUMMA™ canisters from the tank farms.

LMHC's Production Control is responsible for the preparation of the JCS work packages.

LMHC's Characterization Field Sampling working with SESC's Analytical and Laboratory is responsible for the field installation of the tracer gas equipment as required. This includes the baseline sample, tracer gas injection, and periodic sampling.

LMHC's Characterization Field Sampling is responsible for providing an operations Person In Charge (PIC) and to support sample efforts as identified in the JCS work package. Characterization Field Sampling is responsible for the operations of the tracer gas equipment. Coordination with Analytical and Laboratory and PNNL shall be required to transfer the tracer gases to Field Sampling and to transfer the samples from Analytical and Laboratory Services to PNNL.

LMHC's Design Basis Reconstitution is responsible for supplying support of the Tank Farm Cognizant Engineer.

PNNL shall be responsible for the characterization of the data from the samples. PNNL is responsible for the following:

1. Provide clean, evacuated SUMMA™ canister sampling vessels
2. Provide the tracer gas injection system as detailed in this test plan
3. Perform sample analyses to determine He and SF6 concentrations
4. Report all results as they are obtained to Duke Engineering Services Hanfords (DESH) Safety Issue Resolution.
5. Prepare a final report with all results and submit it to DESH's Safety Issue Resolution.
6. Initiate Chain of Custody Documentation

Duke Engineering Services Hanford TWRS USQ Process shall perform the USQ required for this task.

Duke Engineering Services Hanford Characterization Project ESH&QA shall provide the QA activity required for this task.

Numatec Hanford Company (NHC) Characterization Field Engineering shall supply the vapor sampling cognizant engineer for this effort. The vapor sampling cognizant engineer shall assign the riser for each tank to be sampled.

NHC Engineered Applications shall supply the working facilities for SESC's Analytical Laboratory Services.

Rust Federal Services Hanford (RFSH) Waste Sampling and Characterization Facility (WSCF) shall perform total alpha, total beta, and gamma energy analysis (Cs-137) on the downstream side of the radiological particulate filter. WSCF shall also perform total activity analysis on the downstream side of the silica gel traps.

10.0 Closeout Costs

The cost to closeout this task should funding be deleted would be dependent on the phase at which the task is canceled. The estimated cost to properly close this project is $30,000.

11.0 References

Brothers, J. W., 1997, *Preliminary Letter Report on Tank S-102 Tracer Gas Testing,* (letter to G. D. Johnson, Manager Flammable Gas Program DESH, March, 17) PNNL, Richland, Washington

SESC, 1997, *Test Plan for Determining Breathing Rates in Single Shell Tanks Using Tracer Gases*, HNF-SD-WM-TP-529, Revision 0, SGN Eurysis Services Corporation, Richland, Washington

HAS, 1997, *Sample Chain of Custody, Acceptance, and Disposal,* LO-090-450, Revision B-1, Hanford Analytical Services (Rust Federal Services and Numatec Hanford Co.), Richland, Washington

HAS, 1997, *Collection of SUMMA Canisters,* LO-080-403, Revision A-0, Hanford Analytical Services (Rust Federal Services and Numatec Hanford Co.), Richland, Washington

PNNL, 1994, *Quantitative Gas Mass Spectrometry",* PNL-ALO-284, Revision 1, Pacific Northwest National Laboratory, Richland, Washington

PNNL, 1997, *Analysis of Sulfur Hexafluoride (SF6) in Air Using Molecular Sieve Column and Electron Capture Detector,* PNNL-SF6-97, Revision 0, Pacific Northwest National Laboratory, Richland, Washington

DOE, 1996, *Hanford Analytical Services Quality Assurance Requirements Document (HASQARD),* DOE/RL-96-68, Revision 0, Department of Energy-Richland Operations, Richland, Washington

WHC, 1996, *Safety Analysis Manual,* WHC-CM-4-46, Revision 21, Westinghouse Hanford Company, Richland, Washington

PNNL, 1995, *Shipping, receiving, and Handling Procedure for PNL Waste Tank Samples,* PNL-TVP-07, Revision 1, Pacific Northwest National Laboratory, Richland, Washington

PNNL, 1994, *Cleaning SUMMA Canisters and the Validation of the Cleaning Process,* PNL-TVP-02, Revision 0, Pacific Northwest National Laboratory, Richland, Washington

PNNL, 1996, *QA Plan for PNNL Flammable Gas Project,* MCS-027, Revision 2, Pacific Northwest National Laboratory, Richland, Washington

WHC, 1996, *Test Plan for Measuring the Breathing Rate of Tank S-102 By Use of Tracer Gases,* WHC-SD-WM-TP-492, Revision 0, Westinghouse Hanford Company, Richland, Washington

Appendix A

Tracer Gas Sampling Scheduling

ID	Task Name	Duration
1	Sample Tanks AX-103, BY-105, C-107, U-103	0d
2	Baseline Sample	1d
3	Injection	1d
4	24 Hour Sample	1d
5	7 Day Sample	1d
6	30 Day Sample	1d
7	90 Sample	1d

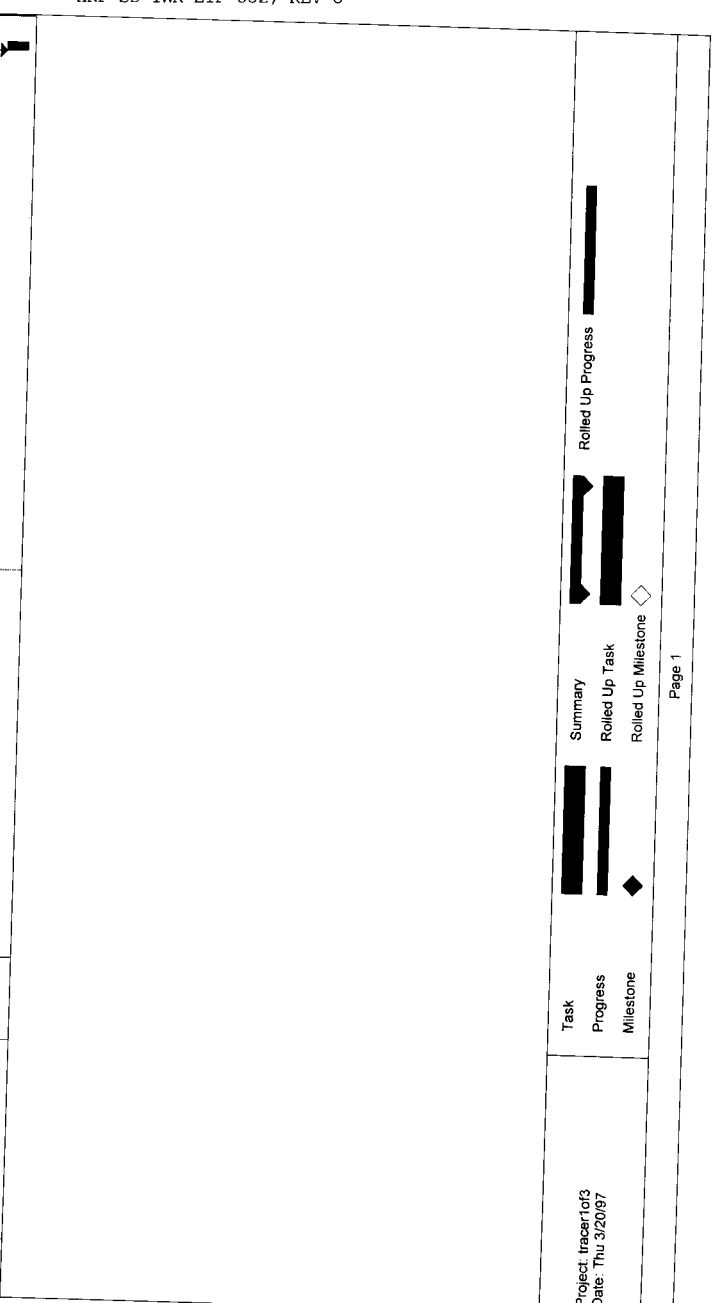

ID	Task Name
1	Sample Tanks Tank 5, Tank 6, Tank 7, and Tank 8
2	Baseline Sample
3	Injection
4	24 Hour Sample
5	7 Day Sample
6	30 Day Sample
7	90 Sample

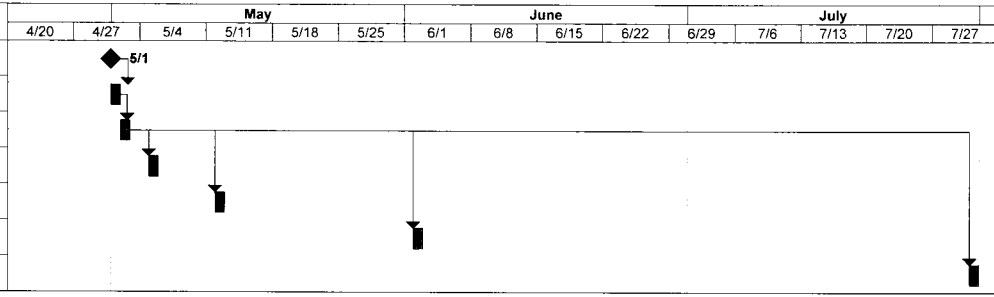

Project: tracer2of3
Date: Fri 3/21/97

Task
Progress
Milestone
Summary
Rolled Up Task
Rolled Up Milestone
Rolled Up Progress

Page 2

ID	Task Name
1	Sample Tanks Tank 9, Tank 10, Tank 11, and Tank 12
2	Baseline Sample
3	Injection
4	24 Hour Sample
5	7 Day Sample
6	30 Day Sample
7	90 Sample

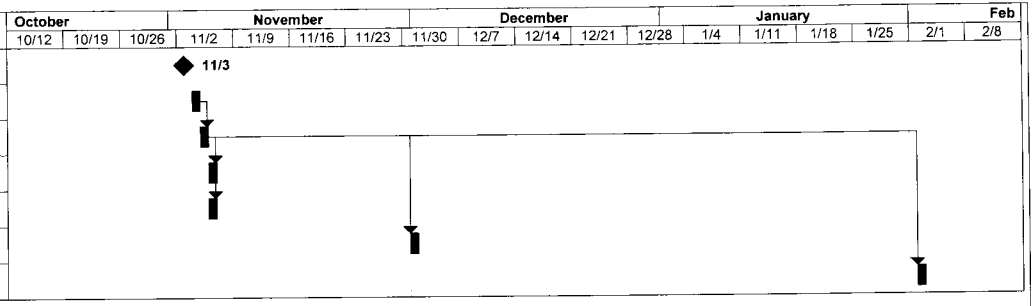

Project: tracer3of3
Date: Thu 3/20/97

Task
Progress
Milestone
Summary
Rolled Up Task
Rolled Up Milestone
Rolled Up Progress