11A

BNWL-2080-3
UC-78

Quarterly Progress Report
LWR Fuel Recycle Program

October - December 1976

January 1977

Prepared for the Energy Research
and Development Administration
under Contract E(45-1)-1830

Battelle
Pacific Northwest Laboratories

BNWL-2080-3

NOTICE

This report was prepared as an account of work sponsored by the United States Government. Neither the United States nor the Energy Research and Development Administration, nor any of their employees, nor any of their contractors, subcontractors, or their employees, makes any warranty, express or implied, or assumes any legal liability or responsibility for the accuracy, completeness or usefulness of any information, apparatus, product or process disclosed, or represents that its use would not infringe privately owned rights.

PACIFIC NORTHWEST LABORATORY
operated by
BATTELLE
for the
ENERGY RESEARCH AND DEVELOPMENT ADMINISTRATION
Under Contract EY-76-C-06-1830

Printed in the United States of America
Available from
National Technical Information Service
U.S. Department of Commerce
5285 Port Royal Road
Springfield, Virginia 22151
Price: Printed Copy $_____*; Microfiche $3.00

*Pages	NTIS Selling Price
001-025	$4.50
026-050	$5.00
051-075	$5.50
076-100	$6.00
101-125	$6.50
126-150	$7.00
151-175	$7.75
176-200	$8.50
201-225	$8.75
226-250	$9.00
251-275	$10.00
276-300	$10.25

BNWL-2080-3
UC-78

3 3679 00062 3241

QUARTERLY PROGRESS REPORT
LWR FUEL RECYCLE PROGRAM

October - December 1976

Compiled by J. H. Jarrett

January 1977

BATTELLE
Pacific Northwest Laboratories
Richland, Washington 99352

CONTENTS

LIST OF FIGURES iv
LIST OF TABLES iv
INTRODUCTION 1
CATEGORY 2 - ECONOMIC AND ENVIRONMENTAL DOCUMENTATION 2
CATEGORY 3 - SPENT FUEL RECEIPT AND STORAGE. 13
CATEGORY 4 - HEAD-END PROCESSES. 18
CATEGORY 5 - OFF-GAS TREATMENT 24
CATEGORY 6 - PUREX PROCESS (SOLVENT EXTRACTION) PART 1 29
CATEGORY 6 - PUREX PROCESS (SOLVENT EXTRACTION CONTACTORS) PART 2 . . 34
CATEGORY 7 - FINISHING PROCESSES 36
CATEGORY 8 - WASTE MANAGEMENT 39
CATEGORY 9 - ENVIRONMENTAL EFFECTS. 47
CATEGORY 11 - GENERAL SUPPORT 52
REFERENCES. 56
DISTRIBUTION Distr-1

LIST OF FIGURES

1 Reprocessing Alternatives 19

2 Study Flowsheet Showing Potential Intercycle Tritium Paths . . . 21

3 Optical Micrograph Showing the Disturbed Metal Layer on 1.9-cm Thick Stainless Steel Plate Cut Using an Arc Saw at Rate of 1.7 cm/min 43

4 Optical Micrograph Showing the Disturbed Metal Layer at the Center of 0.6-cm Thick Stainless Steel Plate Cut Using a Plasma Torch 43

5 Optical Microaphs Illustrating the Type of Surface Produced by Explosive Cutting: A) 0.8 cm-Thick Stainless Steel Pipe Cut from the Inside and B) 0.6-cm Thick Mild Steel Pipe Cut from the Outside 44

6 Scanning Electron Micrographs Illustrating the Surface Cracking and Copper Distribution for Explosively Cut Mild Steel Pipe: A) Back-Scattered Electron Image and B) Copper X-Ray Map of the Same Region 44

7 An Example of Hourly Reporting Precipitation Stations for the United States 49

LIST OF TABLES

1 LWR Fuel Recycle Program Categories. 1

2 Fissile Plutonium Mass Flow for HEDL Small Pin, Large Pin and Advanced Large Pin Oxide LMFBR Design (kg). 5

3 Plutonium Isotopic Compositions 6

4 Cost Factors for Future Conventional U_3O_8 Production at 20% Rate of Return on Capital. 9

5 Cost Factors for Future "In Situ Leaching" U_3O_8 Production at 20% Rate of Return on Capital. 9

6 Permitted Water Evaporation and Air Flow at Saturation for Different HTO Concentrations 22

7 Tributyl Phosphate Removal by Sorbers 27

QUARTERLY PROGRESS REPORT
LWR FUEL RECYCLE PROGRAM
OCTOBER - DECEMBER 1976

INTRODUCTION

This is the third in a series of Quarterly Progress Reports on research and development studies for the LWR Fuel Recycle Program[a] being performed by Battelle-Northwest at the ERDA-Pacific Northwest Laboratory (PNL). The LWR Fuel Recycle Program is designed to assist in the commercialization of the LWR fuel cycle. Included in this program are both activities in support of specific design studies and other activities of more general applicability to fuel recycle technology. The overall program, which is managed by Savannah River Operations and Savannah River Laboratory (SRO-SRL),[a] is divided into the 11 categories listed in Table 1. PNL presently has research in eight of these categories as indicated by asterisks in the table below.

TABLE 1. LWR Fuel Recycle Program Categories

1 - Liaison and Program Coordination
*2 - Economic and Environmental Documentation
*3 - Spent Fuel Receipt and Storage
*4 - Head End Processes
*5 - Off-Gas Treatment
*6 - Purex Process (Solvent Extraction)
*7 - Finishing Processes
8 - Waste Management
*9 - Environmental Effects
10 - Safeguards
*11 - General Support

* Categories where PNL is conducting research.

This report summarizes PNL activities during the reporting period of October through December. The previous reports in this series are BNWL-2052, BNWL-2080-1, and BNWL-2080-2

(a) Sponsored by the Energy Research and Development Administration (ERDA) Division of Nuclear Fuel Cycle and Production.

CATEGORY 2 - ECONOMIC AND ENVIRONMENTAL DOCUMENTATION

(F-RL-14-007)

PROJECT TITLE: Economic Studies - Plutonium Strategy Analysis

PROJECT MANAGER: R. M. Fleischman, Nuclear Systems Analysis Section, Energy Systems Department

PRINCIPAL INVESTIGATOR: D. F. Newman, Nuclear Systems Analysis Section, Energy Systems Department

OBJECTIVES

Provide a comprehensive evaluation of plutonium utilization strategies during the transition from a light water reactor (LWR) economy to a liquid metal fast breeder (LMFBR) economy. Characterize both the LMFBR and LWR fuel cycles in detail so that the effects of the minor isotopes of plutonium on the fuel performance in each system are taken into account. Determine the value of plutonium in either system and evaluate the benefits of various plutonium utilization strategies in the nuclear fuel cycle. Identify decision points in the various plutonium utilization strategies, necessary for the implementation of the chosen strategy and/or to avoid logistical inadequacies in the nuclear fuel cycle for that strategy.

SUMMARY

Detailed information for both the LWR and LMFBR fuel cycles was obtained for use in evaluating plutonium utilization strategies. The effects of the minor isotopes of plutonium on the fuel performance in each system were taken into account in calculating the annual plutonium requirements.

TRIPS AND VISITORS

None

CATEGORY 2 (contd)

TECHNICAL PROGRESS

ECONOMIC STUDIES - PLUTONIUM STRATEGY ANALYSIS

(D. F. Newman and R. M. Fleischman)

Historically, the evaluation of plutonium recycle in LWRs has been separated from the LMFBR. Whereas this approach has its programmatic rationale, one never observes: 1) a true indication of plutonium logistics and use strategies during the transition, 2) the LWR recycle industry requirements as a function of breeder introduction dates, or 3) an analysis of the LMFBR reprocessing capacity requirements to avoid shortfall in the LMFBR fuel supply.

Previous studies have shown that plutonium recycle in LWRs is technically feasible and contributes significantly to uranium resource utilization. About 22% less uranium mining is required when spent LWR fuel is reprocessed and the recovered uranium and plutonium is recycled. However, the economic incentives to recycle plutonium in LWRs have changed dramatically over the last few years due to increases in the fabrication penalty for mixed-oxide fuels and the projected cost of reprocessing spent fuel. Currently, the concensus within the nuclear industry is that the value of the reprocessed uranium and the plutonium may be essentially equal to the reprocessing costs. However, the charges for the disposal of fuel in a throw-away cycle are estimated to be about twice the waste disposal cost for reprocessed fuel. In this context cumulative fuel cycle cost savings of 6 to 7% are currently projected from successive recycling of the self-generated plutonium and the recovered uranium in spent LWR fuel.

From the standpoint of uranium consumption and limitations in supply, plutonium recycle in LWRs is desirable because it offers moderate savings in energy production costs and extends the LWR fuel supply until the breeder or other energy source can fill increased demands. Even in light of marginal cost savings, arguments can be advanced for some plutonium recycle in LWRs to

demonstrate that the technical, safety, and safeguards issues related to the plutonium fuel cycle have been resolved to the satisfaction of the public, thus paving the way for an LMFBR-plutonium energy economy. Multiple recycling of plutonium in LWRs will reduce the total amount of plutonium available in the transition time before the LMFBR can sustain its own growth. On the other hand, the buildup of nonfissile plutonium isotopes, ^{240}Pu and ^{242}Pu, will be beneficial to the LMFBR since the fast fission cross sections of these isotopes will reduce the total amount of fissile plutonium required to initially load an LMFBR.

Core design parameters for three oxide-fueled 2500 MWth (800 MWe) LMFBRs which may be typical of LMFBR designs during the transition period from an LWR economy to an LMFBR-plutonium energy economy were obtained from the Hanford Engineering Development Laboratory (HEDL). The annual fissile plutonium mass flows for the three LMFBR designs are listed in Table 2, assuming a plutonium isotopic composition typical of LMFBR equilibrium discharge. The plutonium feed requirements for these LMFBR designs are being recalculated for cases assuming that the plutonium discharged from LWRs is used as the feed material. Plutonium isotopic compositions calculated at discharge for various fuel cycles are listed in Table 3. The discharged PWR and BWR fuel compositions were calculated using the ORIGEN computer code which has been previously normalized to predict observed isotopic discharges for selected LWR fuels.

TASKS IN PROGRESS AND PLANS

The replacement equivalent, in terms of plutonium discharged from various LWR cycles for a plutonium composition typical of LMFBR equilibrium discharge, will be determined which satisfies LMFBR feed requirements. Economic and logistic fuel cycle requirements will be calculated for selected energy generation schedules and a variety of plutonium utilizations strategies.

TABLE 2. Fissile Plutonium Mass Flow for HEDL Small Pin, Large Pin and Advanced Large Pin Oxide LMFBR Design (kg)

		0.230 Inch Pin			0.300 Inch Pin			Advanced Large Pin		
	Capacity	Core	Discharge		Core	Discharge		Core	Discharge	
Year	Factor	Feed	Core	Blanket	Feed	Core	Blanket	Feed	Core	Blanket
1	0.60	2751	1142	95	2749	1149	93	2864	795	69
2	0.66	1261	1253	208	1260	1268	205	875	874	151
3	0.72	1375	1366	251	1374	1383	247	955	952	247
4	0.72	1375	1366	275	1374	1383	271	955	952	270
5	0.72	1375	1366	299	1374	1383	294	955	952	294
.										
.										
.										
16	0.72	1375	1366	299	1374	1383	294	955	952	294
17	0.704	1345	1337	292	1344	1353	288	934	932	288
18	0.689	1315	1307	286	1314	1323	281	913	911	281
19	0.673	1285	1277	279	1284	1293	275	892	890	275
20	0.657	1255	1247	273	1254	1262	268	871	869	268
21	0.641	1225	1217	266	1224	1232	262	850	848	262
22	0.626	1195	1187	260	1194	1202	256	830	828	255
23	0.610	1165	1158	253	1164	1172	249	809	807	249
24	0.594	1135	1128	247	1134	1142	243	788	786	243
25	0.579	1105	1098	240	1104	1112	236	767	765	236
26	0.563	1075	1068	233	1074	1081	230	746	744	230
27	0.547	1045	1038	227	1044	1051	223	725	724	223
28	0.531	1015	1009	220	1014	1021	217	705	703	217
29	0.516	985	979	214	984	991	211	684	682	211
30	0.500	955	2738	591	954	2761	582	663	2860	671

TABLE 3. Plutonium Isotopic Compositions

	^{238}Pu	^{239}Pu	^{240}Pu	^{241}Pu	^{242}Pu
1st UO_2 PWR Discharge	0.004	0.669	0.217	0.093	0.017
2nd UO_2 PWR Discharge	0.009	0.588	0.236	0.128	0.038
Equilibrium UO_2 PWR Discharge	0.016	0.551	0.239	0.142	0.053
1st Pu Recycle PWR Discharge	0.028	0.442	0.151	0.246	0.132
2nd Pu Recycle PWR Discharge	0.044	0.432	0.118	0.226	0.180
3rd Pu Recycle PWR Discharge	0.063	0.383	0.111	0.223	0.220
1st UO_2 BWR Discharge	0.002	0.723	0.204	0.062	0.009
2nd UO_2 BWR Discharge	0.006	0.619	0.247	0.103	0.026
3rd UO_2 BWR Discharge	0.008	0.583	0.256	0.117	0.036
Equilibrium UO_2 BWR Discharge	0.013	0.553	0.260	0.126	0.048
1st Pu Recycle BWR Discharge	0.026	0.476	0.154	0.231	0.113
2nd Pu Recycle BWR Discharge	0.042	0.447	0.136	0.211	0.164
3rd Pu Recycle BWR Discharge	0.059	0.386	0.132	0.211	0.212
LMFBR Equilibrium Discharge		0.707	0.248	0.030	0.015

CATEGORY 2 - ECONOMIC AND ENVIRONMENTAL DOCUMENTATION
(F-RL-14-007)

PROJECT TITLE: Economic and Environmental Studies in Support of LWR Fuel Cycle

PROJECT MANAGER: W. A. Reardon, Economic Analysis Section, Energy Systems Department

PRINCIPAL INVESTIGATORS: Task 1 - W. A. Reardon, Economic Analysis Section, Energy Systems Department

Task 2 - L. E. Addison, Computers and Information Systems Section, Engineering Physics Department

OBJECTIVES

Conduct economic analysis of specific components of the LWR fuel cycle as required to support the SRL LWR Fuel Recycle Program. The initial tasks are to provide updated estimates of U_3O_8 costs, and description and use of "NUCOST" computer code.

SUMMARY

A new estimate of the average U_3O_8 price for the 15-year period, ending 1990, were obtained.

TRIPS AND VISITORS

October 11-14, 1976 - W. A. Reardon attended the First Pacific Basin Conference on Nuclear Development and the Fuel Cycle, Honolulu, HI.

October 19-20, 1976 - W. A. Reardon attended the Annual Uranium Seminar, ERDA, Grand Junction, CO.

TASK 1 - ECONOMIC AND ENVIRONMENTAL STUDIES IN SUPPORT OF LWR FUEL CYCLE

(W. A. Reardon)

Uranium Price Estimation for New Mines

At the Annual Uranium Seminar, October 19-20, 1976 Mr. John Klemenic of the ERDA, Grand Junction, Colorado Office presented a linear program solution to the addition of new capacity to produce U_3O_8. As usual, the solution is a uranium cost-based solution with the $15 forward cost "reserves" and "probable" resources. In the published paper[1] the spending schedule for the various components of cost is given for some 27 new mines and mills which are considered to be the most likely properties to be developed. The spending schedule associated with each component of cost is also given. With this information the expected "price" of U_3O_8 can be calculated for a given rate of return for the average mine. (Work is continuing on the extraction of still further detail.) The results are given in Table 4 for the average mine and an assumed 20% rate of return. Table 5 shows the results of the same methods applied to the in situ leaching process of recovery which is gaining acceptance as an economical method of recording uranium from some low-grade ores. As one can see, there is a very significant cost difference.

Calculational Methods and Assumptions

For tax purposes, it is usually assumed that drilling costs are charged off during the year of expenditure, but for this study, we amortize the drilling costs over the life of the mine. The rationale for this procedure is that in a stand alone mine/mill complex the expenditures in the first 6 years represent an investment which must be recovered from that facility. Therefore, the drilling is treated as any other capital investment.

Exploration

Klemenic[1] estimates the total expenditure for exploration to be $778 million. This will establish 27 new mines (or production centers in his nomenclature) or $28.82 million/mine. For each mine, this is spent

TABLE 4. Cost Factors for Future Conventional U_3O_8 Production at 20% Rate of Return on Capital

(Costs are in 1975 dollars/lb U_3O_8)

Cost Factors	$
Capital Cost	
Mill	5.23
Mine Plant and Equipment	3.70
Primary Development	12.15
Exploration	5.05
Operating Cost	
Mine	6.88
Mill	4.38
TOTAL	$37.39

TABLE 5. Cost Factors for Future "In Situ Leaching" U_3O_8 Production at 20% Rate of Return on Capital

(All costs are in 1975 dollars/lb U_3O_8)

Cost Factors	$
Capitalized Charged	
Land Acquisition	0.46
Surface Exploration	1.90
Development Drilling	0.38
Primary Development	5.89
Mill Construction	3.02
Operating Costs	
Mine Operating	3.95
Mill Operating	3.85
Pumping Costs	0.20
Mine Equipment Costs (Annual)	0.35
TOTAL	$21.24

over a period of 5 years between years -8 and -3 (zero being the start of production). Thus, the first expenditure will be amortized over an 18-year period. It is assumed that the time pattern is: 5 years for exploration,

3 years to build the mine/mill complex and a 10-year production period. The second year's expenditures would be amortizied over 17 years and so on. To be more accurate one should probably use mid-year values as averaged which will be done in the extension. The expenditures per year per mine for exploration are thus (788/27)1/5 millions/year or 5.763 millions.

The factor for capital recovery are computed by

$$R = P \left[\frac{i(1+i)^n}{(1+i)^n - 1} \right] \qquad (1)$$

where

R = End of year payment in a uniform series continuing for the coming n periods, the entire series equivalent to P at interest rate i.

P = Present sum of money.

The rate of return was taken to be 20%/year. We therefore, have:

	yr		%
5.763 at 20% for	18	=	21.56
	17	=	20.52
	16	=	19.49
	15	=	18.49
	14	=	16.53

or total of $96.59 return/mine. For 27 mines this amounts to $2607.93. The 27 mines will produce 258,000 tons of U_3O_8; thus the exploration cost is:

$$\frac{2607.93 \times 10^6}{258 \times 2 \times 10^6} = \$5.05/\text{lb } U_3O_8$$

The other quantities in Tables 4 and 5 were obtained the same way.

TASK 2 - DESCRIPTION AND USE OF NUCOST CODE (L. E. Addison)

A new version of NUCOST has been written and verified. This version is modular in design which will make NUCOST easier to maintain and more

easily transferred between computers. Several capabilities have also been added to NUCOST including:

- The tails composition for enrichment can be specified on a yearly basis.
- An escalation factor can be specified for each of the unit costs.
- The discounted cost table can be shifted in time.
- The levelized costs are now calculated on 5-year spans. They are also individually time shifted to produce costs that are more consistent with the method used by utilities.

A more detailed version of the NUCOST user's manual is being written. This manual contains detailed descriptions of input requirements, model calculations, default program values, and interpretation of results. It will also contain information about the program itself such as commons, program modules, program organization, and program logic. This information will make it possible for people to maintain their own NUCOST versions.

TASKS IN PROGRESS AND PLANS

Task 1 - In the coming quarter we plan to put the program on the computer to try to estimate annual detail. New data will be obtained since John Klemenic of ERDA, Grand Junction, plans to include the $30/lb forward cost reserves and probable potential resources in the program to fill in a gap between supply and demand which appears around 1989 in his current solution.

Task 2 - The NUCOST users document is expected to be completed in the next quarter. Also, we plan to create a version of NUCOST on a computer medium that will be available for possible distribution.

CATEGORY 2 - ECONOMIC AND ENVIRONMENTAL DOCUMENTATION

PROJECT TITLE: Technical Assistance to Savannah River Laboratory

PROJECT MANAGER: I. C. Nelson, Environmental Technology Evaluation Portion of the Generic Environmental Impact Statement for Commercial Waste Management

PRINCIPAL INVESTIGATOR: I. C. Nelson

OBJECTIVE

Review and comment on Environmental Impact Statement (EIS) drafts prepared by SRL.

SUMMARY

Draft EIS material was reviewed and commented on.

TRIPS AND VISITORS

None

TECHNICAL PROGRESS

Draft EIS material was reviewed and commented on.

TASKS IN PROGRESS AND PLANS

EIS material will be reviewed and commented on as needed.

CATEGORY 3 - SPENT FUEL RECEIPT AND STORAGE

(F-RL-15-001)

PROJECT TITLE: Survey Current Technology of Fuel Handling Techniques

PROJECT MANAGER: R. S. Kemper, Materials Development Section, Materials Department

PRINCIPAL INVESTIGATORS: J. F. Nesbitt, Engineering Physics Department, G. S. Allison, Materials Development Section, Materials Department

OBJECTIVES

Identify and assess potential improvements for spent fuel handling in predissolver equipment. This will be done by evaluating the spent fuel handling process and the conceptual design development, and by evaluating the prototype equipment demonstration and operation. Alternate processes will be developed where significant improvements are identified in either plant efficiency or waste management.

SUMMARY

Evaluation of existing and planned process equipment and concepts was continued through discussion with industry personnel and visits. A report covering the evaluation of the processes and the operation of spent fuel handling and predissolver equipment has been finalized. Preliminary plans and evaluations for on-going research programs have been made.

TRIPS AND VISITORS

October 7, 1976 - J. F. Nesbitt visited C. Fong of Lockheed-California at Burbank, CA.

CATEGORY 3 (contd)

October 12, 1976 - Mr. G. F. Merz and Franklin King of SRL visited PNL at Richland, WA.

October 14, 1976 - Dr. E. E. Voiland of General Electric visited PNL at Richland, WA.

October 26, 1976 - J. F. Nesbitt visited Mr. R. Lucas and W. Smit of Liquid Air Inc., in Kennewick, WA.

November 10, 1976 - J. F. Nesbitt visited J. P. Duckworth at NFS in West Valley, NY.

November 11, 1976 - J. F. Nesbitt visited C. E. Jennrich of Central Research Laboratory in Red Wing, MN.

November 14, 1976 - G. S. Allison visited RETECH in San Rafael, CA.

December 14, 1976 - J. F. Nesbitt, W. S. Kelly, G. S. Allison, and R. S. Kemper visited Mr. G. F. Merz at SRL.

TECHNICAL PROGRESS

Lockheed-California Company was visited to obtain information and data on their R&D program and tests using solid carbon-dioxide (dry-ice) pellets for the cleaning and preparation of surfaces. To date, this blast process has not been used for surface decontamination. However, with provisions to keep the contaminants entrained in an exhaust flow, the process would appear to offer several advantages to certain decontamination problems such as shipping casks.

Additional contacts have been made with Lockheed-California and equipment suppliers to obtain information on the required equipment and services needed, and to determine approximate costs and delivery schedules.

Savannah River Laboratory personnel visited PNL to discuss and review the status of the Spent Fuel Receiving Task of the LWR Fuel Recycle Program. The

preliminary draft of a report covering the evaluation of existing and planned spent fuel handling and disassembly facilities was reviewed and approaches for specific R&D programs were outlined. Presentations on specialized instrument developments were also made. SRL presented, for review and submittal of informal comments, a draft of a conceptual scope design document for the head end of a reprocessing plant. Comments have been made and submitted. Drafting and design efforts were initiated on conceptual drawings for the planned R&D programs. These drawings have been completed.

A follow-up visit was made to Nuclear Fuel Services (NFS) Plant at West Valley, New York, to examine the systems utilized to limit cask contamination and to decontaminate casks. While in full operations, NFS found that the average time to turn a cask around was 18 hours and their analysis of this process indicated cask contamination was the major factor. After installation of the cask washdown shed, a cask protective bucket in the unloading pool, and improvements in the pool water treatment system, the turnaround time was reduced to an average of 4 hours.

It took approximately 1 year to design, fabricate, and install this equipment at an estimated cost of over $175,000. As indicated, its use reduced the cask turnaround time considerably as well as affording a reduction in required crew size and personnel exposure.

Discussions on fuel disassembly were also held with NFS personnel. Based on their experience with different fuel elements and processes, the following opinions were expressed:

- It is important to keep mechanical operations to a minimum.
- End fittings need to be removed before shearing to reduce high-level waste and to provide a better relationship of large pieces to fine in the dissolving process.

- It was very difficult and expensive, and practically impossible to process fuel in leaker cans.
- It is practically impossible to mechanically dis-assemble bundles by unbolting and pulling tubes because tubes will break into short sections. (Some dis-assembly was done by pushing individual tubes with master-slave manipulators. However, this was very slow and tedious work.)

Central Research Laboratory has been manufacturing, installing, and servicing a complete line of manipulators for a number of years. Some of the more recent improvements or developments that have been made in the master-slave manipulators include:

- Better and higher force grip provisions,
- Better sealed remote units with two seals that have oil or gas pressure in between the seals,
- Slave arms remotely removable and/or interchangeable in the cell,
- Developing remote or electric master slave units with force feedback, and
- Offset or indexing provisions that permit better visibility of the work location.

As with other equipment suppliers, Central Research Laboratory has found that their equipment, when installed for remote operation, has been exposed and used in conditions for which it was never intended. They also stressed that provisions for remote maintenance should be considered early in any installation.

A preliminary test of the arc saw in removing end fittings from spent fuel bundles was conducted at RETECH Inc., in San Rafael, California. Two dummy bundles were used for the cutting trials, each comprising 64, 0.440-in.-dia Zircaloy tubes with welded end plugs held together in a 5.5-in. square array by three drilled, 0.5-in.-thick stainless steel plates. The bundles were placed in the saw tank underwater for all cuts. Two cuts through the

empty tube portion, and four cuts through the end cap portion of the bundles were made at various feeds and currents. The saw blade, 40 in. in diameter and 0.100 in. thick, rotated at 1000 rpm and was fed into the bundle in a chopping mode. The residue from the sawing operation was collected for analysis.

Analysis of the data indicates the following:

- The residue from the cutting operation is a sludge of various-size particles of Zircaloy which has been molten. The metal content of the particles is about 75% by weight. All particles are coated with a thick layer of oxide. The pyro-phoricity of the as-formed sludge has not been established.
- Cuts through the bundle require less than 10 sec.
- Blade wear as measured indicates a loss of about 0.005 in. on the diameter per cut, but requires much more testing to establish a reliable wear figure.
- The test indicates a great potential for the arc-saw in removing the end fittings.

The possibility of procurring an arc-saw jointly with the Atlantic Richfield Hanford Company (ARHCO) is being explored. ARHCO is considering the arc-saw for reducing the volume of decommissioned contaminated equipment, and the two operations should mesh well in the development stages.

TASKS IN PROGRESS AND PLANS

Program plans for a research and development program for improved cask decontamination systems or procedures, end fitting removal, fuel bundle disassembly, and fuel element design catalog are being finalized.

CATEGORY 4 - HEAD-END PROCESSES

(F-RL-14-002)

PROJECT TITLE: Alternatives to Voloxidation

PROJECT MANAGER: H. H. Van Tuyl, Applied Chemistry Section, Chemical Technology Department

PRINCIPAL INVESTIGATOR: L. L. Burger, Applied Chemistry Section, Chemical Technology Department

OBJECTIVES

Review and evaluate alternate approaches to voloxidation for the removal of tritium and other volatile fission products from irradiated fuel prior to aqueous feed preparation.

SUMMARY

A general outline of alternative reprocessing steps is presented which emphasizes the head-end treatments available. Simplified water recycle schemes are presented which indicate that a wide range of operating conditions exist.

TRIPS AND VISITORS

December 9, 1976 - O. Robertson (SRO) visited PNL for discussion of programs.

December 14, 1976 - J. Kelley (SRL) visited PNL.

TECHNICAL PROGRESS

Figure 1 shows the alternatives for fuel reprocessing. Route "a" leads to conventional Purex-type processing while route "b" would involve

such methods as fluoride volatility, chloride volatility, salt cycle, molten metal-salt combinations, etc. The conventional wisdom has suggested that the latter methods may have particular merit for special reactor types, including those utilizing close coupled processing, but not for LWRs. Continually changing rules for the nuclear industry may require some reevaluation of that position.

However, the present program is concerned only with route "a" and more specifically with paths "c" and "d".

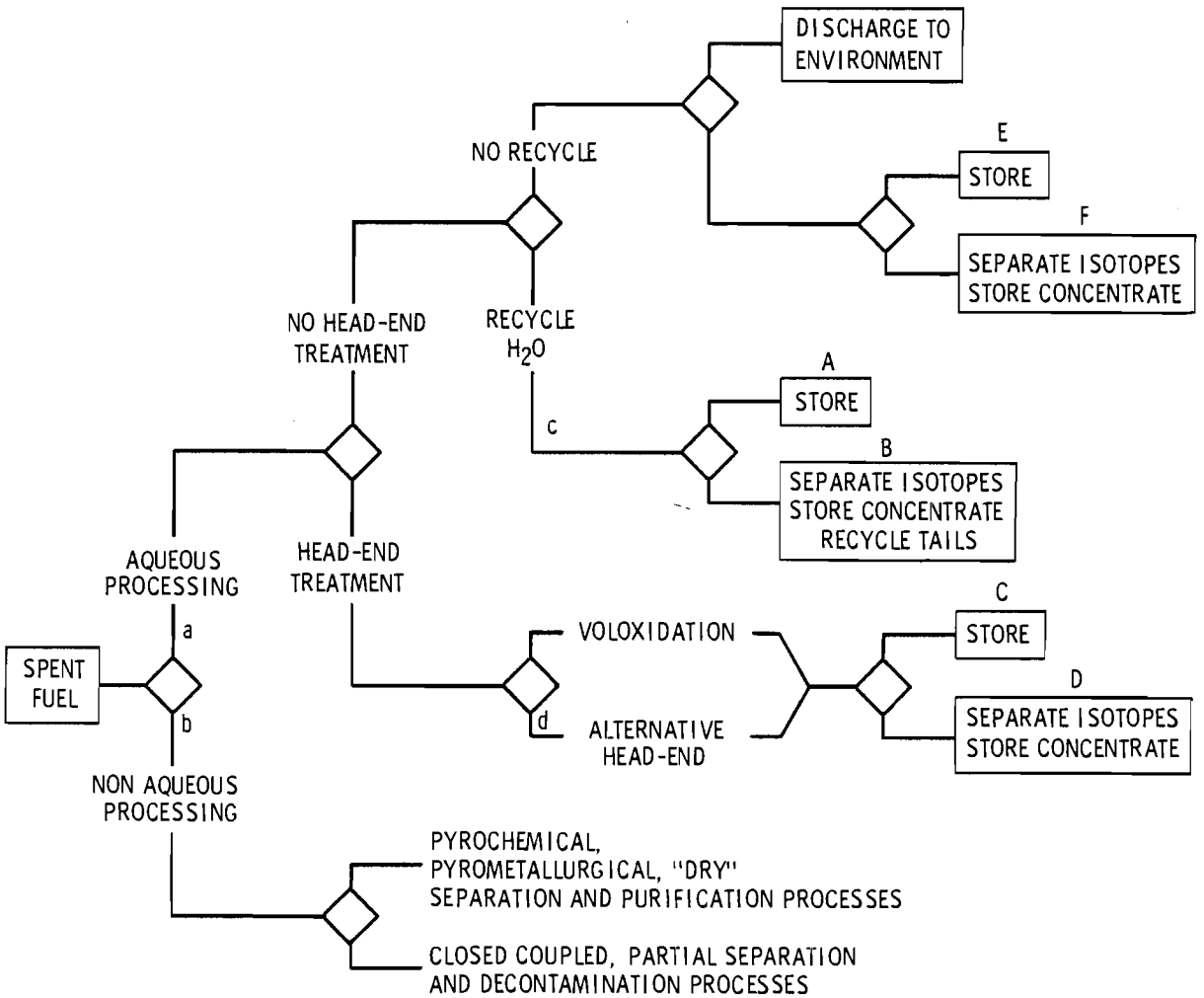

FIGURE 1. Reprocessing Alternatives

RECYCLE (L. L. Burger)

The general concept of water recycle in Purex reprocessing was outlined in the July-September report and references were cited there. A preliminary reference plant is defined as:

- 5 MTU d^{-1}
- 3000 Ci T
- 1.5×10^5 m^3 air flow equally divided between shear, dissolver, and vessel rents.
- 10^5 ℓ H_2O total plant flow.
- 2.5×10^4 ℓ H_2O - 1st extraction cycle.
- 1.0×10^5 m^3 air flow - Dissolver and 1st extraction cycle.
- 150 Ci T released at stack as HTO.

The first considerations are based on A and B in Figure 1. Alternatives E and F serve as further reference points. An additional modification not shown in the figure is isolation of aqueous streams within the plant in an attempt to prevent initial dilution of HTO from the dissolver section. The obvious division point is after the first extraction cycle. Figure 2 shows a simplified version of this concept. If tritium-free scrub is used in the first extraction cycle, then the separation can be made. Nitric acid balance may require conversion of some acid to the anhydride for reuse. Thus, alternatives A and B in Figure 1 can be further modified by tritium recycle in the first extraction cycle. The direct result of this would be to cut the volume of water involved by a factor of ∿4 and raise the concentration of the aqueous waste before recycle from 0.03 to 0.12 Ci/ℓ.

The 150 Ci/d discharge is based on 95% recovery of the tritium. It also represents the approximate amount that can be released keeping the site boundary concentration below 0.1% of that suggested by 10 CFR 2D, assuming a site dilution of 10^7 sec m^{-3}.

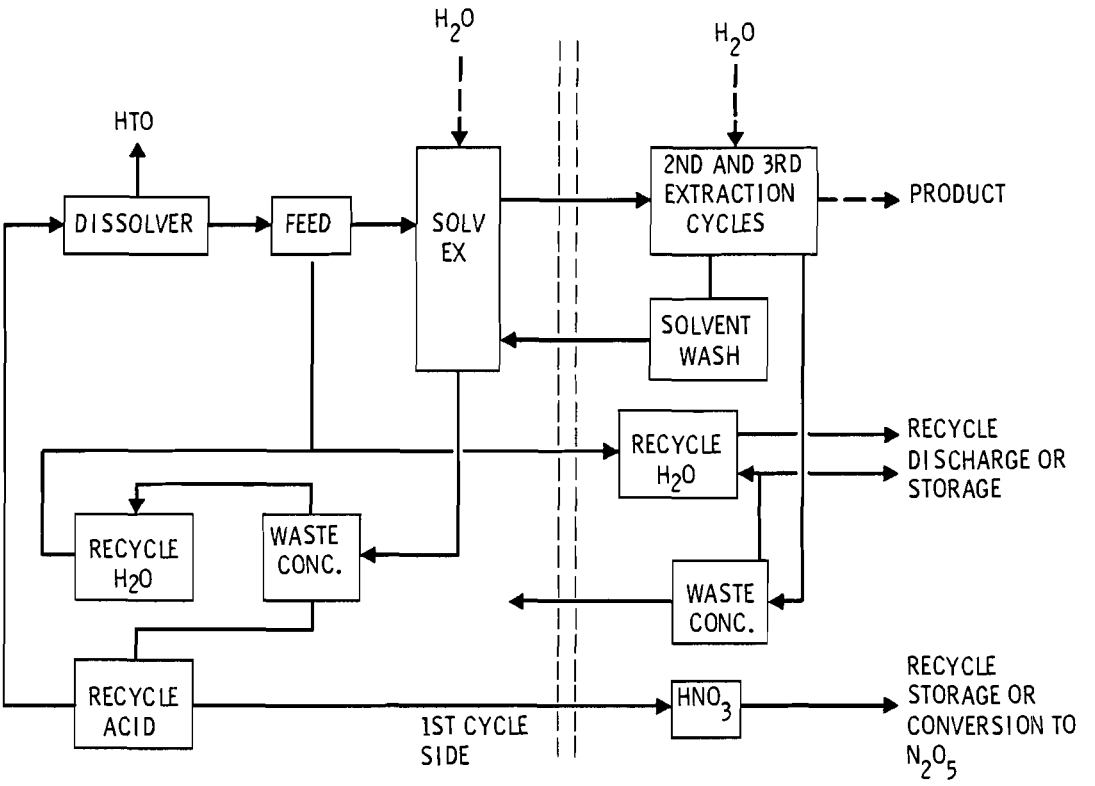

FIGURE 2. Study Flowsheet Showing Potential Intercycle Tritium Paths

Table 6 shows the amount of water that may be evaporated and released per day for several T concentrations. At 2 Ci/ℓ, for example, it would be necessary to refrigerate the offgases to well below 0°C if the air flow of 1.5×10^5 m^3 d^{-1} were used. A combination of drying of discharge air and an improvement in air seals to permit lower flow rates will be required. Some air can be recycled. Control of humidity and air flow in individual process cells will probably be the best approach.

Control of air flow and humidity appears to be of major concern in the recycle concept. The total air flow assumed above is optimistically low and does not include air flow from the plant control zone. The latter could, of course, be dried on an emergency basis.

TABLE 6. Permitted Water Evaporation and Air Flow at Saturation for Different HTO Concentrations (Release = 150 Ci/d)

HTO Concentration, Ci/ℓ	H_2O for 150 Ci, g	Air Flow at Saturation, m^3d			
		30°C	0°C	-30°C	-40°C
0.03	5.0E6	1.65E5	1.03E6		
1.0	1.5E5	4.93E3	3.09E4	4.41E5	
2.0	7.5E4	2.55E3	1.55E4	2.21E5	
10.0	1.5E4	4.93E2	3.09E3	4.41E4	1.30E5

Examples of several of the alternative recycle schemes are shown in the following simplified schemes:

(a) Combine all water and recycle to 2 Ci/ℓ (concentration factor of 60). 1.5×10^3 ℓ/d, 4.5×10^5 ℓ/yr to storage. 8.55×10^5 Ci to storage, 4.5×10^4 Ci released.

(b) Isolate first extraction cycle from remainder of plant. Recycle to 2 Ci/ℓ (concentration factor of 16.7). 1.5×10^3 ℓ/d, 4.5×10^5 ℓ/yr to storage. 8.55×10^5 Ci to storage, 4.5×10^4 Ci released (4.5×10^3 Ci via 2nd cycle leakage).

(c) Combine all water and recycle to 2 Ci/ℓ. Bleed off 1575 ℓ/d and route to isotope separation plant.

Separation Plant: Feed 1575 ℓ, 2 Ci/ℓ.
Product 75 ℓ, 40 Ci/ℓ.
Waste 1500 ℓ, 0.1 Ci/ℓ.

Product to Storage 75 ℓ/d, 2.25×10^4 ℓ/yr.

Recycle waste to plant first cycle.

To determine the storage concentrations the decay must be included. Thus, storing 2850 Ci/day will accumulate 8.32×10^5 Ci in 1 year, 6.84×10^6 in 10 years, and 1.39×10^7 Ci in 30 years.

PYROCHEMICAL HEAD-END TREATMENT (R. D. Scheele)

Possible pyrochemical head-end treatments as an alternative to voloxidation were discussed in two earlier reports.[2,3] The two basic techniques involve reaction of the spent UO_2 with either a molten reducing metal or a molten oxidizing salt. Information on the latter approach is less complete, but it is likely that oxidizing technique may require fewer modifications. Several scouting-type laboratory studies were initiated.

Sodium nitrate was reacted with UO_2 powder or pellets in a 5:1 salt to oxide weight ratio. Reaction temperatures and times varying from 450 to 600°C and from 1 to 4 hr were used. The reaction is $2UO_2 + 4NaNO_3 \rightarrow Na_2U_2O_7 + 2NaNO_2 + 2NO_2 + 1/_2O_2$.[4] An orange to red-brown solid was formed each time. The solids have not been analyzed, but based on weight gain after extracting the sodium salts with water, a greater than 99% conversion to $Na_2U_2O_7$ was achieved. No agitation has been used up to this point.

The reaction was vigorous and caused the pellets to break up into a fine powder followed by the subsequent suspension of the solids in the fused salt. It was hoped that a solution, as described by Yamagishi,[5] would be prepared to insure complete breakdown of the fuel oxide, and thus effect complete release of tritium and other gaseous fission products. To determine whether the existing disaggregation is sufficient for this purpose, studies using irradiated fuel are necessary.

Literature reviews on various oxidation and reduction techniques for treating UO_2-PuO_2 are continuing.

TASKS IN PROGRESS AND PLANS

Recycle studies will consider the reprocessing flowsheet in more detail to determine the relative significance of factors such as impurity buildup, air flow and water evaporation, seals, nitric acid utilization, maintenance hazards, etc.

Literature research will continue. Further simple evaluation tests of the reaction of fuel pellets with oxidizing salts will be carried out.

CATEGORY 5 - OFF-GAS TREATMENT

(F-RL-14-003)

PROJECT TITLE: Investigation of Air Cleaning Processes for Removing Tributyl Phosphate (TBP) from Off-Gas Streams

PROJECT MANAGER: L. C. Schwendiman, Particulate and Gaseous Waste Research, Atmospheric Sciences Department

PRINCIPAL INVESTIGATOR: G. B. Parker, Particulate and Gaseous Waste Research, Atmospheric Sciences Department

OBJECTIVE

Provide a suitable air cleaning process for removing low concentrations of tributyl phosphate vapors from nuclear fuel reprocessing off-gas streams.

SUMMARY

Initial screening studies on small candidate inorganic sorbents for TBP gave promising results, since several absorbers gave efficiencies above 90% for a 2-in.-deep bed. Face velocities dictated by the necessary integrated sampling flow limitations were much lower than anticipated for the in-plant systems for iodine removal.

Better methods of generating and measuring very low concentrations of TBP in air streams were achieved, although some questions regarding reproducibility still remain to be resolved.

Near the end of the quarter an on-line instrument for essentially continuous air analysis for TBP was received and will be calibrated and applied in future measurements.

TRIPS AND VISITORS

November 16, 1976 - G. B. Parker and L. C. Schwendiman visited SRL and talked with John Stone (SRL), M. L. Hyder (SRL) and J. A. Harper (SRP), about specific program tasks. Discussed work with O. C. Robertson, ERDA-SRO.

November 17, 1976 - G. B. Parker visited Meloy Laboratories, Inc., Springfield, VA, to observe operation and capabilities of a phosphorus detector/analyzer.

December 7, 1976 - O. C. Robertson (ERDA-SRO) visited PNL.

TECHNICAL PROGRESS

Laboratory development work on a sensitive quantitative analysis technique for measuring very low concentrations of TBP vapor concentrated on the NIOSH standard method for analysis of organophosphates. This method involves collecting the airborne TBP sample in ethylene glycol. The TBP is extracted from the ethylene glycol into hexane and concentrated. The liquid concentrate is analyzed by a gas chromatograph equipped with a flame ionization phosphorus detector. The detection limit of this method is 0.005 μℓ TBP. Laboratory experiments were conducted to test the ability to generate, manipulate, and measure very low concentrations of TBP vapor in an air stream using the NIOSH method. TBP was introduced into the air streams by bubbling dry nitrogen through liquid TBP in a wash bottle held at a constant temperature. TBP concentrations could be maintained reasonably constant, but were shown to be only about 10% of the saturation concentrations. Experiments were conducted in which a much larger surface area was employed in the bubbler. This change yielded significantly higher concentrations, but still below saturation.

The reproducibility of the overall method of generation, sampling, and measurement was evaluated as part of the investigation of the efficiency of several candidate sorbents to remove TBP. Sorbents for TBP removal were

packed into a 2-in. (5 cm) deep by 1-in. (2.5 cm) diameter bed. The feed stream to the column consisted of TBP vapor in dry nitrogen, flowing at 172 mℓ/min. The feed stream flow was the sum of a side stream of N_2 (100 mℓ/min) plus the sparged stream containing TBP in N_2 (72 mℓ/min). Bed temperature was maintained at 100°C in all test runs. Measured TBP concentrations during the run varied from 4×10^{-4} to 1×10^{-3} g/ℓ. Samples were taken of the inlet feed stream to the test column by sparging the total stream through ethylene glycol, prior to the experimental run, to establish inlet TBP concentration. The TBP in ethylene glycol was extracted with hexane and measured on a gas chromatograph.

During the test run, the effluent from the bed was passed through the ethylene glycol. Samples were taken in 1-hr increments continuously for a total of 3 hr. In several test runs, a sample was also taken of the carrier gas (N_2) alone which was passed through the bed material for 1 hr at the end of the test run to measure any TBP eluting from the bed. Each ethylene glycol sample was analyzed for TBP. Efficiency of the material to remove TBP was determined by calculating the retained percentage of the total TBP metered to the bed. Table 7 is a summary of the results.

In all materials tested, except Material G, retention efficiency appeared to improve after the first hour of run time. The amount of TBP in the samples for the second and third hours decreased or remained the same. This apparent anomaly is consistent among the materials. One theory proposed is that the bed material needs to be conditioned with TBP for a period of time before becoming an efficient trap. Further experimental work will be needed to establish how long this trend would continue until the TBP begins to break through the bed. The second run using Material A shows some evidence of TBP breakthrough.

From Table 7, it can be concluded that the most efficient materials tested were Materials A (first test), D, and H. None of the materials except Material G retained less than ∿90% of the metered TBP. Material H, however, cannot be considered a viable material since it contains charcoal plus other unknown chemical species.

TABLE 7. Tributyl Phosphate Removal by Sorbers (Summary Results of Runs at 172 cm^3/min in 5-cm-deep by 2.5-cm-dia Bed)

Material	Inlet TBP, mg	Outlet TBP 1st hr, mg	Outlet TBP 2nd hr, mg	Outlet TBP 3rd hr, mg	Outlet TBP Total, mg	TBP in N_2 for 1 hr Flush Following Run, mg	% TBP Retention
Charcoal[a]	1.8	0.119	0.031	0.005	0.155	0.008	91.4
A	1.8	<0.005	<0.005	<0.005	<0.015	<0.005	>99
B	2.6	--	--	--	0.22[b]	--	91.5
	1.9	0.14	0.008	0.808	0.156	0.008	91.8
C	1.4	0.071	(c)	0.008	--	0.008	--
D	1.5	0.015	<0.005	<0.005	<0.025	<0.005	>98.3
E	2.6	0.14	0.01	<0.005	<0.155	<0.005	>94
F	2.0	0.16	0.064	<0.005	<0.229	0.005	>89
G	1.9	0.34	0.089	0.20	0.579	0.005	70
H	1.6	0.006	<0.005	<0.005	<0.016	<0.005	>99
J	2.4	0.16	0.038	0.019	0.217	0.006	91
K	19.8	0.67	0.069	0.041	0.77	--	96.1
L	19.8	0.37	0.061	0.029	0.47	--	97.7
M	9.6	0.52	0.099	0.035	0.654	0.018	93.2

(a) Coconut base
(b) Total of 4.5 hr run time
(c) Sample lost

The indicated inlet concentration of TBP in this series of experiments extending over a period of about 4 months had a standard deviation of 26%. The reproducibility is largely determined by the errors in the extraction step and the gas chromatographic analyses. Furthermore, each screening test was performed over a relatively short time period during which more nearly constant conditions could be maintained. Thus, the bed removal efficiencies are more accurate than represented by the standard deviation determined over the full range of these experiments.

A Meloy Laboratories, Inc. (Springfield, VA) PA 460 phosphorus detector/analyzer was received in late November. Analysis is by a patented flame photometric detector designed specifically for phosphorus. Operating manuals were studied and experiments designed to utilize this real time instrument in further studies.

TASKS IN PROGRESS AND PLANS

Laboratory work will be carried out to achieve a viable method to calibrate the Meloy phosphorus Analyzer using TBP vapor in an airstream. The NIOSH standard method will be used as a backup for determination of the TBP concentrations generated. Materials that showed promise for retaining TBP (as determined by the initial screening studies) will be investigated under varying bed conditions to select the best TBP sorbents for study in laboratory-simulated process streams.

Feasibility of studying Purex off-gas streams at SRP to determine TBP concentrations will be explored.

CATEGORY 6 - PUREX PROCESS (SOLVENT EXTRACTION) PART 1

(F-RL-14-004)

PROJECT TITLE: Study of Iodine Chemistry in Process Solutions

PROJECT MANAGER: J. H. Jarrett, Chemical Development Section, Chemical Technology Department

PRINCIPAL INVESTIGATOR: J. L. Swanson, Chemical Development Section, Chemical Technology Department

OBJECTIVE

Study the chemical species and behavior of the iodine which is not volatilized from the dissolver solution and develop means of managing iodine in the various plant streams in order to minimize its release to the environment.

SUMMARY

Laboratory testing of commercially available macroreticular polymeric adsorbents for removal of iodine from simulated fuel reprocessing plant concentrator condensates continues to give promising results. Preliminary tests with another type of adsorbent, manganese dioxide-impregnated materials, also gave somewhat encouraging results. An iodide-specific ion electrode is being used to investigate various reactions of importance in feed treatment and in effluent species identification.

TRIPS AND VISITORS

December 7, 1976 - O. C. Robertson of SRO visited PNL for discussion of programs.

TECHNICAL PROGRESS (J. L. Swanson, J. A. Partridge, J. L. Cox)

Our studies continue to emphasize removal of iodine species from simulated fuel reprocessing plant low-level aqueous effluent streams by adsorption processes, especially with commercially available macroreticular polymeric adsorbents. Such streams would likely contain the bulk of the iodine which is not volatilized from the dissolver solution, and the release of iodine in such streams could be the release which limits the overall plant retention factor.

The long-term column tests with the macroreticular polymeric adsorbents described in the last quarterly report were terminated early this quarter. The additional information obtained from these tests included:

- Poorer DF (iodine content in feed/iodine content in effluent) behavior was obtained when starting up again after the columns were shut down for several days.
- The color due to the adsorbed iodine faded with time during shutdown periods.
- Washing the loaded columns with water resulted in the removal of a burst of iodine from the XAD-7 and XAD-8 adsorbents, but not from the XAD-2 and XAD-4 adsorbents.
- Elution of the sorbed iodine by washing sequentially with 0.1M $Na_2S_2O_3$ in 0.1M NaOH and 0.1M Na_2SO_3 in 0.05M HNO_3 was only partially successful. In the most successful test (XAD-2 adsorbent), about 80% of the sorbed iodine was eluted by the first two column volumes of the basic thiosulfate solution, but continued washing with this solution followed by the acidic sulfite solution removed only about 5% more of the sorbed iodine.

Washing the XAD-4 polymeric adsorbent with organic solvents prior to use for iodine removal may lead to improved iodine DF behavior. In one comparison,

material which has been washed consecutively with methanol, acetone, benzene, and methanol again appeared to give a slightly better iodine DF than did only water-washed material (about 200 as opposed to about 100) in column runs of about 200 column volume duration at flow rates of about five column volumes per hour with feeds prepared by adding 0.3M H_2O_2 to 1 x 10^{-5}M KI in 0.05M HNO_3.

Most of our tests have employed 0.3M H_2O_2 in the feed to oxidize any iodide ion to molecular iodine, which is sorbed strongly by the polymeric adsorbents. Batch contact data obtained with XAD-4 adsorbent indicated that 0.01M H_2O_2 was sufficient to give good sorption of iodine from solution; column runs using such feed (0.01M H_2O_2 added to 1 x 10^{-5}M KI in 0.05M HNO_3), however, gave an iodine DF of only about two. The reason for this discrepancy is not known, but it is thought that it may involve a reaction with an impurity present in the as-received adsorbent, a reaction which shows up much more importantly in the batch contacts than in the column runs.

The use of Amberlyst A-26 macroreticular anion exchange resin for the removal of iodide ion from 0.05M HNO_3 solution does not appear especially promising because of relatively low breakthrough capacity. With feeds containing 10^{-6} or 10^{-5}M iodide ion in 0.05M HNO_3, iodine breakthrough occurred after only about 100 column volumes.

The possibility of removing iodide ion from dilute HNO_3 solution by passage through an elemental iodine-loaded polymeric adsorbent was tested. Some removal was obtained but the apparent capacity was quite low; the DF was initially very high but dropped to about 100 after about eight column volumes and to about 25 after only about 13 column volumes, with a feed solution containing 1 x 10^{-5}M KI in 0.05M HNO_3 and a feed flow rate of about 1.7 column volumes/hour (based on the total column volume). The column was prepared by loading the top 1 cm^3 of a 12-cm^3 column of XAD-4 with about 0.3 millimoles of elemental iodine by sorption from 1 x 10^{-3}M I_2 in 0.05M HNO_3. While these results are not outstanding, this approach may warrant additional effort.

The use of manganese dioxide-impregnated porous materials as sorbents to remove iodine species from dilute HNO_3 has been the subject of some preliminary tests. The results were somewhat promising and appear to warrant continued effort in this area, even though high iodine DF's have so far been obtained only at low flow rates (DF's have approached 100 only at flows below one column volume/hour with the columns tested to date). One encouraging feature of these materials is that the iodine DF appears to be the same with a feed solution containing largely iodide ion as it is with a feed solution containing largely elemental iodine; thus indicating that no feed treatment would be required to achieve removal of a variety of iodine species by MnO_2-impregnated sorbents. The sorbents were prepared by calcination in air at 250°C of manganous nitrate-impregnated unfired Vycor glass (30 to 100 mesh) or Zeolon 900 molecular sieve (20 to 50 mesh); it is likely that more suitable substrate materials can be found.

An iodide-specific ion electrode is being used to investigate various reactions of importance in feed treatment and in effluent species identification. The oxidation of iodide ion by hydrogen peroxide appears to be first order in iodide concentration, and is much more rapid in 0.05M HNO_3 than it is in neutral solution; the rate also increases with increasing peroxide concentration. The reduction by hydroxylamine nitrate of elemental iodine to iodide ion proceeds much more rapidly than does the reduction of iodate ion to iodide ion, thus providing a means of determining the relative amounts of iodide, iodine, and iodate present in a solution. With 0.002M hydroxylamine nitrate in 0.025M HNO_3 + 1M $NaNO_3$ at room temperature, the reduction of elemental iodine followed first order kinetics with a half-time of about 2.4 min while the reduction of iodate ion exhibited an apparent first order half-time of about 165 min.

Gas chromatography with an electron capture detector has been examined for utility in the identification and analysis of volatile iodine compounds.

Because of interference by water, the compounds were extracted into benzene for analysis. Methyl iodide was easily measured at a concentration of 4×10^{-8} M; a lower limit of 10^{-9} to 10^{-10} M may be possible with careful attention to instrument performance. Similar results will presumably be obtained with other organic iodides. Attempts at detecting elemental iodine were unsuccessful, apparently because of irreversible adsorption on the column packings. A variety of different column and instrumental conditions were tested, including several suggested by offsite chromatography specialists.

TASKS IN PROGRESS AND PLANS

Efforts will be continued in the area of iodine removal from simulated fuel reprocessing plant low-level aqueous effluent streams by adsorption processes.

Equipment has been prepared for studies of ways of minimizing the volatilization of iodine during vaporization of water; tests should commence soon.

Development of techniques for the analysis of various chemical species of iodine will be continued, with emphasis being placed on gas chromatography and the iodide-specific ion electrode.

CATEGORY 6 (contd)

PUREX PROCESS (SOLVENT EXTRACTION CONTACTORS) PART 2

(F-RL-14-004)

PROJECT TITLE: Evaluation of Solvent Extraction Equipment

PROJECT MANAGER: J. H. Jarrett, Chemical Development Section, Chemical Technology Department

PRINCIPAL INVESTIGATOR: D. H. Lester, Chemical Development Section, Chemical Technology Department

OBJECTIVE

Perform an integrated study of solvent extraction equipment types. Such information will provide information needed in optimizing reprocessing plant designs. Where voids in existing understanding are identified, additional R&D will be proposed.

SUMMARY

The literature review document, workshop proceedings, and summary documents were edited and prepared for publication. Clearance procedures and publication should be completed early next quarter. A research proposal covering the R&D needs discussed at the workshop (adaptation of new instrumentation to radiochemical use and improvement of pulse column capacity) was submitted, but no definite response has yet been received.

TRIPS AND VISITORS

December 7, 1976 - O. C. Robertson of SRO visited PNL to review program progress and plans.

CATEGORY 6 (contd)

TECHNICAL PROGRESS

The documents resulting from the literature review and workshop completed last quarter were reviewed, edited, and prepared for publication. A summary document was written that can be used without the literature review and workshop proceedings if documentation is not needed. All three documents should be cleared and published early next quarter.

One of the results of the workshop was the identification of R&D needs. Two of these needs of particular interest to PNL are: 1) the adaptation of instrumentation that has been developed in the last few years to use in radiochemical plants, and 2) the development of a pulse column cartridge that would improve capacity without increasing the column diameter beyond critically safe dimensions. PNL has prepared a 189 research proposal covering these areas, but no definite answer has yet been received. Final review of the proposal is expected by the end of this quarter.

CATEGORY 7 - FINISHING PROCESSES

(F-RL-14-005)

PROJECT TITLE: Mixed-Oxide Studies

PROJECT MANAGERS: Tasks 1 and 5 - S. Goldsmith, Fuels Design and Development Section, Materials Department

Task 3 - W. S. Kelly, Applied Engineering and Development Section, Engineering Physics Department

PRINCIPAL INVESTIGATORS: Task 1 - R. O. Lokken, S. R. Wagoner, and W. J. Bailey, Fuels Design and Development Section, Materials Department

Task 3 - D. E. Blahnik, Applied Engineering and Development Section, Engineering Physics Department

Task 5 - W. J. Coleman, Physical Measurements and Electro-Optic Systems Section, Engineering Physics Department

OBJECTIVES

The objectives of the three tasks are to: establish the data base required to formulate product specifications for mixed-oxide fuels (Task 1); evaluate and determine mixed-oxide fuel fabrication processing and materials handling equipment development needs (Task 3); develop a conceptual automatic fuel pellet inspection process (Task 5).

SUMMARY

A draft of the data base report on mixed-oxide (UO_2-PuO_2) fuel was completed. Because of the FY-1977 budget limitations, the depth of this mixed-oxide fuel study had to be decreased.

Writing has been initiated on an informal report which summarizes the mixed-oxide fuel fabrication process and materials handling equipment development needs. A task to evaluate existing fuel pellet inspection techniques and equipment for application to quality assurance/quality control (QA/QC) of LWR mixed-oxide fuel inspection has been started. A literature search has been set up and some of the critical inspection parameters identified.

TRIPS AND VISITORS

None

TECHNICAL PROGRESS

TASK 1. ESTABLISH DATA BASE REQUIRED TO FORMULATE PRODUCT SPECIFICATIONS FOR MIXED-OXIDE FUELS (R. O. Lokken, S. R. Wagoner, and W. J. Bailey)

Effort on the activities in this task was continued during the reporting period and a draft of the data base report on mixed-oxide (UO_2-PuO_2) fuel was completed. However, the general depth of the study had to be reduced. The reduction was a result of the limitation on available funds for Tasks 1-5 in FY-1977. PNL reviewed the budget limitation and recommended that the available funds be concentrated, in decreasing order, on Tasks 5, 3, and 1.

TASK 2. EVALUATE AND DETERMINE MIXED-OXIDE FUEL FABRICATION PROCESSING AND MATERIALS HANDLING EQUIPMENT DEVELOPMENT NEEDS (D. E. Blahnik)

The "state-of-the-art" equipment survey of foreign and domestic fuel fabricators is nearing completion. Results from the survey and an extensive literature search are being incorporated in an informal report which is in process of being written for the SRL.

TASK 5. DEVELOP A CONCEPTUAL AUTOMATIC FUEL PELLET INSPECTION PROCESS (W. J. Coleman)

The evaluation of existing fuel pellet inspection techniques and equipment for application to QA/QC of LWR mixed-oxide fuel inspection has been initiated. A literature search has been set up and some of the critical inspection parameters identified. This parameter identification effort is utilizing the preliminary results of Task 2, Formulation of Reference QA/QC Requirements for Mixed-Oxide Fuel Fabrication as well as the requirements of other commercial and government power reactor systems.

Homogeneity is one of the parameters that was identified as vital to QA/QC of LWR fuel pellets. Work to identify potential homogeneity inspection techniques has been initiated.

TASKS IN PROGRESS AND PLANS

TASK 1

If funds are available, suggested changes or additions will be incorporated into the draft of the data base report on mixed-oxide fuel.

TASK 3

The informal report will be completed. Further plans will be made after the report is reviewed.

TASK 5

Evaluation of fuel pellet inspection techniques and parameters will continue. Preliminary homogeneity parameters and potential inspection techniques will be identified.

CATEGORY 8 - WASTE MANAGEMENT

(F-RL-14-00)

PROJECT TITLE: Electropolishing to Decontaminate LWR Fuel Recycle Metallic Waste

PROJECT MANAGER: R. D. Nelson, Metallurgy Research Section, Materials Department

PRINCIPAL INVESTIGATORS: R. P. Allen, H. W. Arrowsmith, Metallurgy Research Section, Materials Department

OBJECTIVE

Develop and provide the concepts, information and engineering data needed by the LWR fuel Recycle Program for the design and operation of an electropolishing facility for the decontamination of surface-contaminated solid metallic waste. Major program tasks include: 1) the transfer of compatible technology from the commercial electropolishing industry, 2) the development of solution treatment procedures to extend electrolyte life and minimize secondary waste volume, and 3) the development of removal techniques for entrained contamination.

SUMMARY

Significant progress was made on each of the program tasks during this 3-month reporting period. Industry experts were consulted and visits were made to commercial electropolishing facilities to identify electropolishing technology areas that can be adapted for decontamination applications. Several possible solution treatment approaches also were identified, and studies were initiated to explore the use of precipitation/filtration techniques to remove metal salts from the electrolyte. Metallographic studies of specimens prepared using arc saw, plasma torch, and explosive cutting techniques were conducted to determine the amount of metal dissolution required to remove entrained contamination.

TRIPS AND VISITORS

October 26-29, 1976 - R. P. Allen and H. W. Arrowsmith (PNL) visited L. S. Winter at the Hydrite Chemical Company, Milwaukee, WI to discuss electropolishing technology.

November 16, 1976 - W. J. Brumley (SRO), A. S. Messick (SRP), P. H. Permar (SRL), C. D. Spender (E. I. duPont Engineering Department), and L. S. Winter (Hydrite Chemical Co.) visited PNL to discuss electropolishing and its use as a decontamination technique.

TECHNICAL PROGRESS

TASK 1. TECHNOLOGY TRANSFER

Electropolishing is a well established industrial process used to clean, deburr, and surface finish a variety of metals and alloys. Much of the existing electropolishing technology can be adapted for use in decontamination applications, and every effort will be made as part of this program to solicit industry participation and expertise for those areas that are compatible. To initiate this technology transfer, a consulting agreement was established with the Hydrite Chemical Company, Milwaukee, WI, one of the leaders in the electropolishing field. Extensive discussions were held with Mr. L. S. Winter, Senior Vice President of Hydrite, to identify those commercial electropolishing technology areas that can be utilized either directly or with some modification for decontamination applications and to obtain background information for the areas that will require special development. Topics that were considered included the design of electropolishing facilities and systems, automation concepts, equipment and suppliers, electrolytes and operating parameters, electrode materials and racking technology, agitation techniques, rinsing technology, solution treatment procedures, removal of entrained contamination, and in situ electropolishing techniques.

Visits also were made with Mr. Winter and associates to large industrial electropolishing facilities operated by the Polar Ware and Vollrath Companies at Shelboygan, WI, the Ladish Company at Kenosha, WI, and the Adolph Coors Company at Golden, CO. The Ladish Company uses a large, multitank electropolishing system with a programmed hoist to process hundreds of fittings, valves, and pump components per day with only a single operator to rack and unload the parts. The Coors Company uses electropolishing to smooth the surface of stainless steel components prior to assembly to enhance subsequent cleaning operations and prevent the buildup of deposits on the interior of pipes and tanks. Their electropolishing facility includes a 15,000-ℓ tank (1.2-m wide x 5.5-m long x 2.3-m deep) that can electropolish 1.5 x 3.7-m sheets, 3.5-m-dia tank lids, and tanks 0.9-m dia x 1.1-m high. A separate 0.8 x 0.8-m x 8.5-m long tank is used to polish the interior and exterior of 13- to 20-cm dia x 7.3-m long pipes. Special rotating end fixtures permit polishing the interior surfaces of three pipes at a time. These and other similar observations show that the type of large, automated electropolishing facility envisioned for the decontamination of surface-contaminated metallic waste is well within the range of existing industrial electropolishing technology.

W. J. Brumley (SRO), A. S. Messick (SRP), P. H. Permar (SRL), C. D. Spencer (E. I. duPont Engineering Department), and L. S. Winter (Hydrite Chemical Company) visited PNL to discuss electropolishing and its use as a decontamination technique. Facilities visited and specific applications discussed included the Hanford 231-Z Building (1500-ℓ demonstration system for plutonium-contaminated material), T-plant (β/γ decontamination for contact maintenance on failed equipment), B-Plant (decontamination of strontium fluoride and cesium chloride fission product storage capsules), and N-Reactor (decontamination of process tube components for exposure reduction).

TASK 2. SOLUTION TREATMENT STUDIES

The amount of secondary waste generated by the decontamination process is a direct function of the effective life of the electrolyte and rinse solutions.

This in turn is governed by the buildup of dissolved metal and the contamination released into the electrolyte by the electropolishing process and carried into the rinse solutions by dragout. One of the major program objectives is to extend electrolyte life and minimize secondary waste volume by developing effective solution treatment procedures for removing the contamination and dissolved metal from the electrolyte and for recycling the rinse solution.

More than ten possible solution treatment approaches have been identified. Some of these, such as solvent extraction, have been explored previously by industry as a means of extending the life of commercial electropolishing and electroplating solutions. Although technically promising, they were never pursued for economic reasons. The initial studies for this program have focused on precipitation/filtration techniques that have the potential of removing both the dissolved metal and the contamination by coprecipitation. These studies have shown that dilution with methyl alcohol is effective in precipitating metal salts from spent phosphoric acid electrolytes. For example, the dissolved metal content of a 55% phosphoric acid electrolyte used to electropolish 304 stainless steel was reduced from 5 to 2% by a 6 to 1 dilution with methyl alcohol. The iron, nickel and chromium contents decreased by 76, 35 and 41%, respectively. Low temperature distillation techniques can be used after filtration to remove and reclaim the alcohol for reuse and to restore the electrolyte to its original concentration.

TASK 3. ENTRAINED CONTAMINATION STUDIES

Electropolishing is only effective in removing surface contamination. Complete dissolution of the disturbed metal layer will be required to remove contamination entrained in cut surfaces by the disassembly, sectioning, and shredding procedures used to prepare metallic waste for subsequent decontamination operations. Optical and SEM metallographic studies were conducted on specimens provided by P. H. Permar of SRL to determine the thickness and characteristics of the disturbed metal layer produced by representative arc saw, plasma torch and, explosive cutting techniques. The results of these studies are illustrated in Figures 3 through 6.

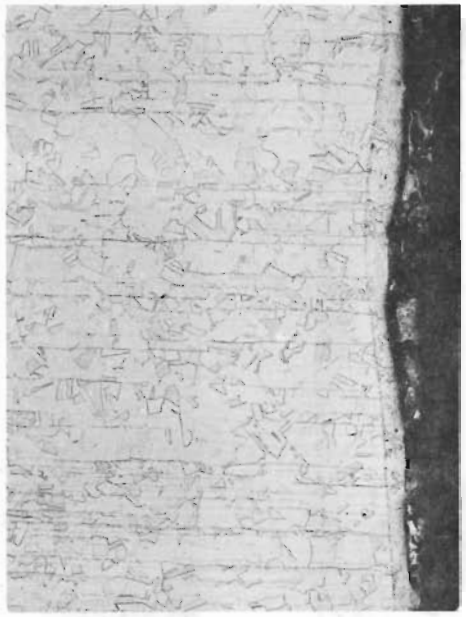

400 μm

FIGURE 3. Optical Micrograph Showing the Disturbed Metal Layer on 1.9-cm Thick Stainless Steel Plate Cut Using an Arc Saw at a Rate of 1.7 cm/min. The area illustrated is 1.25 cm from the start of the cut.

200 μm

FIGURE 4. Optical Micrograph Showing the Disturbed Metal Layer at the Center of 0.6-cm Thick Stainless Steel Plate Cut Using a Plasma Torch

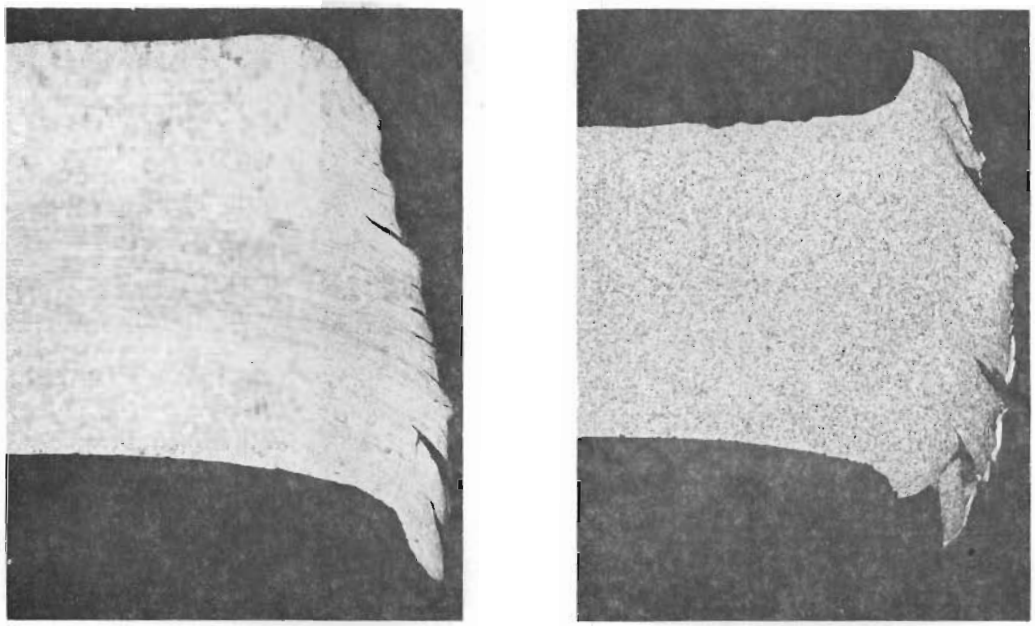

A B

2.5 mm

FIGURE 5. Optical Micrographs Illustrating the Type of Surface Produced by Explosive Cutting: A) 0.8-cm Thick Stainless Steel Pipe Cut from the Inside and B) 0.6-cm Thick Mild Steel Pipe Cut from the Outside.

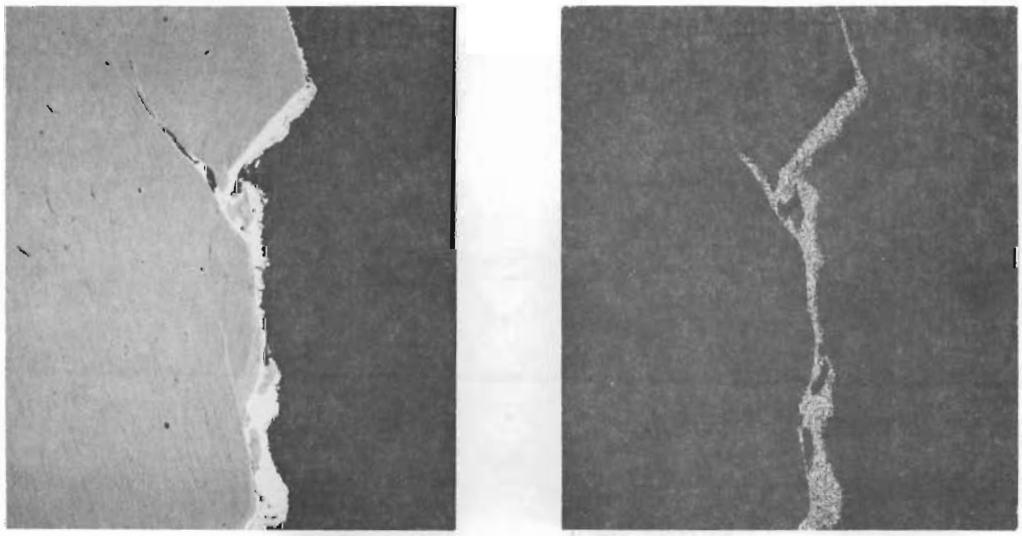

A B

200 μm

FIGURE 6. Scanning Electron Micrographs Illustrating the Surface Cracking and Copper Distribution for Explosively Cut Mild Steel Pipe: A) Back-Scattered Electron Image and B) Copper X-Ray Map of the Same Region

The arc-saw-cut material was 1.9-cm thick 304 stainless steel plate cut at a rate of approximately 1.7-cm/min. The thickness of the disturbed metal layer was 300 μm at the start of the cut and varied from 150 μm to less than 25 μm for constant saw operation. The high cooling rates for this process resulted in a sharp, well defined interface between the undisturbed base metal and the molten surface layer (Figure 3). The plasma-torch-cut material was 0.6-cm thick stainless steel plate. The disturbed layer ranged in thickness from 10 μm to 60 μm with a 175-μm thick bead at the bottom of the cut. The interface was very irregular, however, with apparent intergranular penetration of the melt to a depth of at least another 50 μm (Figure 4).

The material cut using a shaped explosive charge was 0.8-cm thick stainless steel pipe (cut from the inside) and 0.6-cm thick mild steel pipe (cut from the outside). The cut surfaces were severely deformed and exhibited extensive cracking (Figure 5). Many of these cracks had length-to-diameter ratios greater than 10 to 1, making penetration by the electrolyte and decontamination of the interior surfaces improbable. Moreover, copper from the charge holder was plated onto the surface of the cut and even inside the cracks. Figure 6, for example, is a scanning electron micrograph (backscattered image) of a surface region of the mild steel specimen and a copper X-ray map of the same area illustrating the copper coating on the cut surface and showing that it does extend even inside a sealed crack.

These metallographic studies indicate that the dissolution of at least 1000 μm of surface metal would be required to insure removal of all possible entrained contamination for the explosively cut material as compared with less than 300 μm for most of the arc saw and plasma torch cut surfaces. For comparison, the removal of nonentrained surface contamination by electropolishing normally requires the dissolution of less than 50 μm of surface material.

CATETORY 8 (contd)

TASKS IN PROGRESS AND PLANS

Technology transfer studies are continuing with current emphasis on an investigation of titanium as an anode holder and electrical contact material for decontamination applications based on its use as a rack material in the commercial electropolishing and electroplating industries. The solution treatment studies will be expanded to include work with representative plutonium and β/γ-contaminated electrolytes as soon as installation of a low background counting chamber is completed. The next step in the entrained contamination studies is to determine if the normally higher metal dissolution rate at edges (edge effect) is sufficient to remove the disturbed layer or if the development of special fixturing will be required to enhance the dissolution rate at the cut surfaces.

CATEGORY 9 - ENVIRONMENTAL EFFECTS

(F-RL-14-008)

PROJECT TITLE: U.S. Scale Transport, Dispersion, and Removal Model Comparisons

PROJECT MANAGER: C. L. Simpson, Manager
Atmospheric Sciences Department

PRINCIPAL INVESTIGATOR: L. L. Wendell, Manager
Atmospheric Chemistry & Physics Section,
Atmospheric Sciences Department

OBJECTIVE

The primary objective this quarter was to establish a suite of computer codes which would convert the archived hourly precipitation data for the contiguous 48 states into a format of hourly gridded maps suitable for input to atmospheric transport, diffusion, and deposition models. A second objective was to incorporate diffusion and deposition approximations into an isentropic multi-layered version of the transport model. The purpose of this model, which estimates diabatic effects in frontal storms, will be to test the adequacy of the performance of the single layer model in frontal storms.

SUMMARY

Previous model comparisons have demonstrated the importance of using time changing field of precipitation rather than climatologically-averaged precipitation data in regional transport and removal models. A procedure is being developed to prepare large amounts of hourly precipitation data needed for input to regional atmospheric transport and removal models. The original data are contained on magnetic tapes in year-long time series of hourly precipitation for each of approximately 3000 U.S. stations. These data are converted,

through a series of sorting, recombining, and spatial averaging steps, to arrays of gridded hourly precipitation for use in the transport models.

Work has also continued on the modification of an isentropic model to include diabatic effects in frontal storms.

TECHNICAL PROGRESS

PREPARATION OF GRIDDED HOURLY PRECIPITATION MAPS

A system under development for the MAP3S program of ERDA's Division of Biological and Environmental Research for the sorting and merging of hourly precipitation records from stations in the NE United States has been expanded for the LWR program to include up to about 3000 stations covering the contiguous 48 states (see Figure 7). The procedure used is as follows:

There are three steps involved in the preparation of this data. First, the coded information for specified states is extracted from the source tapes, and written in binary form to intermediate tapes or permanent files. Second, a SORT routine using standard CDC SORT/MERGE software is employed to group together the hourly precipitation reports from all of the stations for each day. The data within these groups are arranged according to station number. The daily groups themselves are then arranged chronologically. These data are then written to a second intermediate tape or disk file.

The final step employs the random-to-grid process described in Reference 3 in a program combining the prepared daily precipitation data with station location and time zone information from the card input, to produce sequential arrays of hourly-gridded spatially averaged precipitation for use in the transport models.

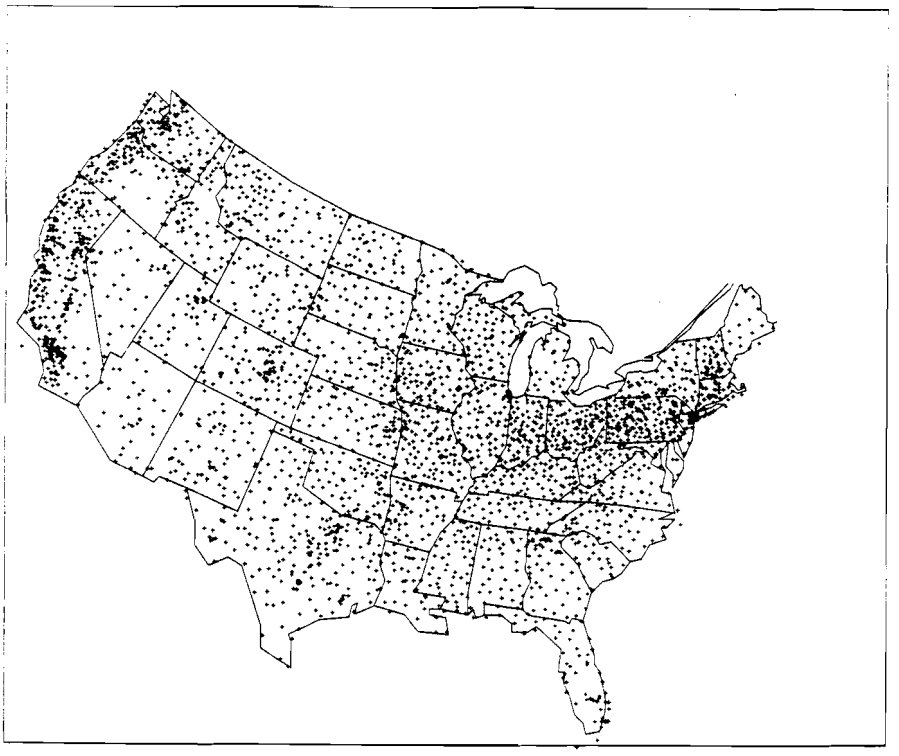

FIGURE 7. An Example of Hourly Reporting Precipitation Stations for the United States

Auxiliary programs include one which will combine files of data from different groups of states, which has already been sorted and grouped by day. Use of this program reduces the huge amounts of disk and core space required by the SORT/MERGE software to extract each day's precipitation from the year-long data strings.

Another program produces a compacted set of the location and time zone card input data for a specified region, which is used by the gridding program. These data are extracted from a base set of this information which has been prepared for the entire U.S.

ISENTROPIC MODEL

An isentropic transport model has been modified to calculate ground level air concentrations and wet and dry deposition as well as to include diabatic effects in frontal storms. The model at present uses potential temperature as a basis for vertical movement of plume segments. The vertical steps in the frontal zones are determined through the use of conservation of equivalent potential temperatures which include diabatic effects due to the release of latent heat. At present the horizontal transport is being determined through the use of u, v components in eight vertical layers: 100-300, 300-500, 500-700, 700-1000, 1000-1500, 1500-2000, 2000-2500, and 2500-3000 m.

Atmospheric contaminants are introduced from a continuous or intermittent point source into the layer containing the release point. A plume segment is horizontally transported by the average wind in the layer containing its center of mass. The height of the center of mass of a plume segment is varied in two ways. First, as the plume segment diffuses vertically the center of mass is raised accordingly. Second, in a given layer, as the moving plume segment encounters a potential temperature differing from its own by a specified amount, a comparison is made with the potential temperatures in the layer above and the layer below. If a close match is found in either of these layers, the plume segment is moved vertically to that layer. Additional work is needed in the model especially in the diffusion section before tests can be made in frontal zones.

TASKS IN PROGRESS

1) Quality assurance testing of the hourly precipitation program.

2) Conversion of the single layer transport and diffusion model and its data base to the use of a latitude longitude grid is in progress. Continued hand checks as well as comparison of the model results with past results using the NMC grid will be made.

CATEGORY 9 (contd)

3) Testing is being carried on of a diffusion model for use in frontal storms.

4) Preparations for an assessment exercise with the single layer model to produce Chi/Q maps for the specified LWR regions.

CATEGORY 11 - GENERAL SUPPORT

(F-RL-14-006)

PROJECT TITLE:	Criticality Safety and Shielding
PROJECT MANAGERS:	Tasks 1 and 2 - C. L. Brown, Nuclear Criticality Section, Energy Systems Department
	Task 3 - E. D. Clayton, Nuclear Criticality Section, Energy Systems Department
PRINCIPAL INVESTIGATORS:	Tasks 1 and 2 - D. R. Oden and M. G. Zimmerman, Nuclear Criticality Section, Energy Systems Department
	Task 3 - R. C. Lloyd, Nuclear Criticality Section, Energy Systems Department

OBJECTIVE

Provide support studies for criticality prevention and process shielding. Review new facilities designed by SRL for fuel reprocessing, plutonium and uranium conversion, plutonium fuel fabrication, and plutonium storage. Provide confirmatory criticality data in support of the LWR Fuel Recycle as needed in code validation, safety assessments, and licensing, to close the fuel cycle safely and economically with assurances.

Pursuant to the LWR Fuel Cycle, it must be emphasized that:

1) Operations can be significantly affected through criticality concerns; i.e., by the limits or restrictions that must be applied to insure criticality prevention.
2) Prior to the granting of a license, the licensees must provide assurances that adequate margins of safety have been included in equipment designs and on process controls to account for uncertainties in criticality data and unlikely, but credible, operating errors.

SUMMARY

Funding was not allocated in the ERDA FY-1977 budget for continuation of Task 1, Criticality Safety Support, nor Task 2, Shielding Analysis Support. Consequently these tasks were discontinued. Funding was received for Task 3, Criticality Experiments, and this work will continue as planned.

Under Task 3 planning continued for the performance of benchmark critical experiments which are to be performed with UO_2 fuel rods immersed in $UO_2(NO_3)_2$ containing soluble neutron poisons. The neutron poisons to be evaluated are gadolinium and cadmium.

TRIPS AND VISITORS

None

TECHNICAL PROGRESS

TASK 1. CRITICALITY SAFETY ANALYSIS

Task 1a. Develop Resource Book on Experience in Design of LWR Fuel Recycle Facilities from Criticality Safety Viewpoint (D. R. Oden)

The information obtained to date on Part 1 (Fuel Reprocessing) was summarized and placed in storage in the event that this task is restarted at a later date.

Task 1b. Investigate Application of Event Tree Analysis to Criticality Safety in Fuel Reprocessing Plants (D. A. Kottwitz)

No work performed during the quarter.

TASK 2. SHIELDING ANALYSIS (M. G. Zimmerman)

Transfer of the PNL shielding calculational system to SRL was completed. Tape 00111 was sent to SRL.[a]

(a) Letter to John Church, Savannah River Laboratory, from M. G. Zimmerman, PNL, November 4, 1976.

Work to prepare standard plutonium source term information for use in shielding calculations was completed. It is planned to finish and publish this document in the next quarter.

TASK 3. CRITICALITY EXPERIMENTS (R. C. Lloyd)

Task 3a. Plan Soluble Neutron Absorber Benchmark Experiments

The experiments being planned will provide benchmark data for validating calculations pertaining to criticality control limits on the use of soluble neutron absorbers (poisons). Low enriched UO_2 fuel rods of 4.3 wt% ^{235}U have been procured for use in the experiments. The rods are made up from 1.199 cm diameter pellets contained in stainless steel fuel tubes; the fuel tube OD is 1.440 cm, with a clad thickness of 0.117 cm.

Critical experiments will be performed with those fuel rods immersed in uranyl nitrate solutions containing soluble poisons of $Gd(NO_3)_3$ and $Cd(NO_3)_2$ to provide data applicable to the use of soluble poisons for criticality control during pellet dissolution.

In connection with the pre-experiment planning and design, a series of calculations are in progress to define the limits of variables to be covered in the experiments. Since rod geometry and fuel enrichment have been defined, the parameters that remain variable are rod pitch and concentration of uranium in the uranyl nitrate solution. The results of the calculations completed to date are summarized in the following table. The calculations are for zero molar excess metric acid solutions; these data were completed using the Eggnit code with ENDFB-4 cross sections.

TABLE 8. Summary of Initial Calculations for Critical Experiment Planning

$U(4.3)O_2$ Rods in Water[a]

Hexagonal Pitch (cm)	B_m^2 (cm^{-2})	k_∞
1.778	4.5418×10^{-3}	1.2023
2.032	7.4797×10^{-3}	1.2887
2.286	8.7383×10^{-3}	1.3137
2.540	8.8909×10^{-3}	1.3070

$U(4.3)O_2$ Rods in Uranyl Nitrate Solution[a]

Solution Concentration (g/ℓ U)	Hexagonal Pitch (cm)	B_m^2 (cm^{-2})	k_∞
900	2.032	3.9858×10^{-3}	1.1891
500	2.032	5.3400×10^{-3}	1.2294
200	2.032	6.4727×10^{-3}	1.2603

(a) Cladding is 304-L stainless Steel, 0.117 cm thick.

REFERENCES

1. J. Klemenic, Analysis and Trends in Uranium Supply. U.S. Energy Research and Development Administration, Grand Junction, Colorado. Presented at the Annual Uranium Seminar, Grand Junction, Colorado, October 19-20, 1976.

2. J. H. Jarrett, Quarterly Progress Report LWR Fuel Recycle Program April-June 1976. BNWL-2080-1, Battelle, Pacific Northwest Laboratories, Richland, WA 99352, July 1976.

3. J. H. Jarrett, Quarterly Progress Report LWR Fuel Recycle Program July-September 1976. BNWL-2080-2, Battelle, Pacific Northwest Laboratories, Richland, WA 99352, October 1976.

4. A. Avogadro and A. DePlano, Pyrochemical Pretreatment of Fast Power Reactor Fuels: Oxidation by Molten Alkaline Nitrates. EUR-4784, October 20, 1971.

5. S. Yamagishi and Y. Kametoto, "Separation of Fission Products from Irrigated Uranium Dioxide in Fused Nitrate Systems." J. Nuc. Sci., & Tech., 2(11):457-162, November 1965.

DISTRIBUTION

NO. OF
COPIES

OFFSITE

1 ERDA Chicago Patent Group
9800 South Cass Avenue
Argonne, IL 60439

A. A. Churm

1 ERDA Albuquerque Operations Office
P. O. Box 5400
Albuquerque, NM 87115

1 ERDA Chicago Operations Office
9800 South Cass Avenue
Argonne, IL 60439

1 ERDA Division of Biomedical and Environmental Research
Washington, DC 20545

J. L. Liverman, Director

1 ERDA Division of International Affairs
Washington, DC 20545

N. F. Seivering, Assistant Administrator

1 ERDA Nuclear Energy
Washington, DC 20545

R. W. Roberts, Assistant Administrator

6 ERDA Division of Waste Management Production and Reprocessing
Washington, DC 20545

G. W. Cunningham, Director
G. Bradley
K. Burson
P. Hogroian
C. Kuhlman
W. McVey
G. Pleat
D. Spurgeon

No. of Copies	
1	ERDA Division of Safeguards and Security Washington, DC 20545 H. E. Lyon
1	ERDA Idaho Operations Office 550 2nd Street Idaho Falls, ID 83401
1	ERDA Oak Ridge Operations Office P. O. Box E Oak Ridge, TN 37830
2	ERDA San Francisco Operations Office 1333 Broadway, Wells Fargo Building Oakland, CA 94616
1	University of California Lawrence Livermore Laboratory P. O. Box 808 Livermore, CA 94550
3	ERDA Savannah River Operations Office P. O. Box "A" Aiken, SC 29801 T. B. Hindman, Jr., Director, Fuel Cycle Project Office Norman Hook N. Stetson, Manager
27	ERDA Technical Information Center
1	Aerojet, Energy Conversion Company 1120 Connecticut Avenue, N.W. Suite 1050 Washington, DC 20036 F. J. Kieman, Eastern Regional Manager, Energy Systems
1	Allied Chemical Corporation 550 Second Street Idaho Falls, ID 83401 F. H. Anderson, General Manager

No. of Copies	
2	Allied-General Nuclear Services P. O. Box 847 Barnwell, SC 29812 A. E. Schubert, President A. K. Williams
1	Argonne National Laboratory 9700 S. Cass Avenue Argonne, IL 60439 J. A. Kyger, Assoc. Director
1	Battelle-Columbus Laboratories 505 King Avenue Columbus, OH 43201 J. M. Batch, Director
3	Battelle-Human Affairs Research Centers 4000 N.E. 41st Street Seattle, WA 98105 S. M. Nealey J. E. Rasmussen, Director C. R. Schuller
1	Babcock and Wilcox P. O. Box 1260 Lynchburg, VA 24505 R. H. Ihde, Manager, Contracts and Marketing
1	Boeing Engineering and Construction Division P. O. Box 3707 Seattle, WA 98124 Richard L. Grant, Director, Nuclear Projects
1	Burns and Roe, Industrial Services Corporation P. O. Box 663 Paramus, NJ 07652 M. I. Naparstek, Manager, Proposals

No. of Copies	
1	Combustion Engineering Nuclear Power Division 1000 Prospect Hill Road Windsor, CT 06095 C. K. Anderson
1	Commonwealth Edison Company P. O. Box 767 Chicago, IL 60690 G. R. Corey, Vice Chairman
1	Carolina Power and Light Company P. O. Box 1551 Raleigh, NC 27602 L. E. Smith, Manager, Fuel
1	Corning Glass Works Corning, NY 14830 M. G. Britton, Manager, Technical Liaison
1	DBM Corporation 1920 Alpine Avenue Vienna, VA 22180 R. G. Cross
1	Edison Electric 90 Park Avenue New York, NY 10016 J. Carp, Director, Energy Policy
10	E. I. duPont de Nemours and Company Aiken, SC 29801 C. H. Ice, Director, SRL
2	Exxon Nuclear Company, Inc. 777 - 106th Avenue, N.E. Bellevue, WA 98009 S. J. Beard R. L. Dickeman, President

No. of Copies	
1	Florida Power Corporation P. O. Box 14042 St. Petersburg, FL 33733 A. H. Hines, Jr., President
1	Florida Power and Light Company P. O. Box 013100 Miami, FL 33101 Dr. Uhrig
1	General Atomic Company P. O. Box 81608 San Diego, CA 92138 John Shefcik
2	General Electric Company 175 Curtner Avenue San Jose, CA 95125 R. G. Barnes K. Bowlman
1	GPU Services Corporation 260 Cherry Hill Road Parsippany, NJ 07054 B. H. Cherry, Manager, Fuel Resources
1	Kerr-McGee Nuclear Corporation Kerr-McGee Building Oklahoma City, OK 73102 Martin Binstock
1	Livermore Radiation Laboratories P. O. Box 808 Livermore, CA 94550 Kenneth Street, Assoc. Director
1	Los Alamos Scientific Laboratory P. O. Box 1663 Los Alamos, NM 87545 H. M. Agnew, Director

No. of Copies	
1	Middle South Utilities, Inc. P. O. Box 61005 New Orleans, LA 70161 F. W. Lewis, President
1	Monsanto Research Corporation Mound Laboratory P. O. Box 32 Miamisburg, OH 45332 W. T. Cave, Director
1	NL Industries P. O. Box 928 Barnwell, SC 29812 George Stukenbroeker
1	Niagara Mohawk Power Corporation 300 Erie Boulevard, West Syracuse, NY 13202 G. K. Rhode, VP, Engineering
1	NRC Nuclear Materials Safety and Safeguards Washington, DC 20545 R. Cunningham
1	NRC Research Washington, DC 20545 Saul Levine, Deputy Director
1	Holmes and Narver, Inc. 400 E. Orangethorpe Avenue Anaheim, CA 92801 W. A. Kalk, Manager, Nu Power Systems
1	Atlantic Richfield Company Box 2679 - TA Los Angeles, CA 90071 L. M. Richards, Coordinator, Nuclear Comm. Dev.
1	Nuclear Fuel Services, Inc. 6000 Executive Blvd. Rockville, MD 20952 R. W. Deuster, President

No. of Copies	
1	Oak Ridge Gaseous Diffusion Plant Oak Ridge, TN 27820 W. J. Wilcox, Technical Director
1	Oak Ridge National Laboratory P. O. Box X Oak Ridge, TN 37830 Herman Postma, Director
1	Westinghouse Electric Corporation Plutonium Recycle Fuel Programs P. O. Box 355 Pittsburgh, PA 15230 J. F. Bader, Manager
1	Proposal Management, Inc. 121 N. Orionna Street Philadelphia, PA 19106 C. A. Hirenda, Director, Marketing
1	Rockwell International Atomics International Division 8900 De Soto Avenue Canoga Park, CA 91304 R. D. Oldenkamp
1	Rockwell International Rocky Flats Plant P. O. Box 464 Golden, CO 80401 R. O. Williams, VP
1	Science Applications, Inc. 1680 Hanover Street Palo Alto, CA 94303

No. of Copies	
1	NUSAC 777 Leesburg Pike Falls Church, VA 22043 R. C. Adkins, Technical Representative
1	Tennessee Valley Authority 217 Electric Power Board Bldg. Chattanooga, TN 37401 Ray Hoskins
1	Thraeger Tech. 110 S. Euclid Avenue Pasadena, CA 91101 K. Vickers
1	Virginia Electric Power Co. Nuclear Fuel Service Dept. 512 Franklin Building P. O. Box 26666 Richmond, VA 32361 Claude Stephens
1	The S. M. Stoller Corp. Western Reprocessors 1250 Broadway New York, NY 10001 S. M. Stoller
1	Yankee Atomic Electric Company 20 Turnpike Road Westboro, MA 01581 Wendell Johnson, VP

ONSITE

2	ERDA Richland Operations Office P. A. Craig O. J. Elgert
2	ARHCO H. H. Hopkins M. J. Szulinski

No. of Copies	
	Hanford Engineering Development Laboratory
3	M. J. Barr R. E. Dahl, Jr. R. B. McCord
	Battelle-Northwest
36	T. W. Ambrose D. E. Blahnik C. L. Brown L. L. Burger N. E. Carter D. B. Cearlock E. D. Clayton J. W. Finnigan J. C. Fox S. Goldsmith A. J. Haverfield E. R. Irish J. H. Jarrett (2) R. S. Kemper W. S. Kelly D. H. Lester R. C. Liikala R. P. Marshall J. M. Nielsen R. E. Nightingale D. E. Olesen L. T. Pedersen A. M. Platt L. C. Schwendiman J. L. Simmons C. L. Simpson J. L. Swanson C. M. Unruh H. H. Van Tuyl L. L. Wendell R. D. Widrig Technical Information (3) Technical Publications