150
10-4-84 JS ②

DR-0449-9

DOE/OR/03054-37-Annex-Vol.B
(DE84015196)

Energy

FOSSIL

SRC BURN TEST IN 700-hp OIL-DESIGNED BOILER
Final Technical Report

September 1983

Work Performed Under Contract No. AC05-78OR03054

International Coal Refining Company
Allentown, Pennsylvania

Technical Information Center
Office of Scientific and Technical Information
United States Department of Energy

DISCLAIMER

DISCLAIMER

This report was prepared as an account of work sponsored by an agency of the United States Government. Neither the United States Government nor any agency thereof, nor any of their employees, makes any warranty, express or implied, or assumes any legal liability or responsibility for the accuracy, completeness, or usefulness of any information, apparatus, product, or process disclosed, or represents that its use would not infringe privately owned rights. Reference herein to any specific commercial product, process, or service by trade name, trademark, manufacturer, or otherwise does not necessarily constitute or imply its endorsement, recommendation, or favoring by the United States Government or any agency thereof. The views and opinions of authors expressed herein do not necessarily state or reflect those of the United States Government or any agency thereof.

This report has been reproduced directly from the best available copy.

Available from the National Technical Information Service, U. S. Department of Commerce, Springfield, Virginia 22161.

Price: Printed Copy A10
Microfiche A01

Codes are used for pricing all publications. The code is determined by the number of pages in the publication. Information pertaining to the pricing codes can be found in the current issues of the following publications, which are generally available in most libraries: *Energy Research Abstracts (ERA); Government Reports Announcements* and Index (*GRA* and I); *Scientific and Technical Abstract Reports (STAR);* and publication NTIS-PR-360 available from NTIS at the above address.

DOE/OR/03054-37-Annex-Vol.B
(DE84015196)
Distribution Category UC-89

FINAL TECHNICAL REPORT:
SRC BURN TEST IN 700-hp OIL-DESIGNED BOILER.
ANNEX VOLUME B:
DOE-PITTSBURGH ENERGY TECHNOLOGY CENTER REPORT

Prepared by

PITTSBURGH ENERGY TECHNOLOGY CENTER
Combustion Technology Branch
P.O. Box 10940
Pittsburgh, Pennsylvania 15236

and

GE/MATSCO
P.O. Box 446
Library, Pennsylvania 15129

under subcontract to

INTERNATIONAL COAL REFINING COMPANY
P.O. Box 2752
Allentown, Pennsylvania 18001

for the

UNITED STATES DEPARTMENT OF ENERGY
Office of Solvent-Refined Coal Products
under Contract DE-AC05-78-ORO-3054

ABSTRACT

SRC Fuel Combustion Test Program in an Oil-Designed 700 HP Watertube Boiler: Phase II

Solvent Refined Coal (SRC) combustion tests were conducted at the U.S. Department of Energy's Pittsburgh Energy Technology Center (DOE/PETC) over a five-month period ending in January 1983. Several organizations participated in this program including: International Coal Refining Company, Babcock & Wilcox, Combustion Engineering, Electric Power Research Institute, Southern Company Services, Southern Research Institute, Wheelabrator-Frye's Air Pollution Control Division, and independent consultants. Combustion and flue-gas treatment of three different physical forms of SRC, as well as a No. 6 fuel oil, were evaluated. The three SRC fuels were (1) pulverized SRC Fuel; (2) SRC Residual Fuel Oil; and (3) SRC/Water Slurry. The SRC Residual Fuel Oil was a solution of SRC Fuel dissolved in heated process solvent. Approximately 500 tons of pulverized SRC Fuel and 30,000 gallons of SRC Residual Fuel Oil were combusted in a 700 hp (30 x 10^6 Btu/hr fuel input) oil-designed watertube package boiler.

Sixty (60), four-hour ASME combustion tests with three different SRC fuels were successfully concluded. The principal parameters evaluated were excess air levels and combustion air preheat temperature levels. Extensive data was collected on flue-gas levels of O_2, CO_2, CO, unburned hydrocarbons, SO_x, NO_x, uncontrolled particulates, uncontrolled opacity and carbon content of the flue-gas particulates. Boiler and combustion efficiencies were measured.

SRC Fuels Burn Test Results

Carbon Conversion Efficiency	97.7	-	99.9	percent
Boiler Efficiency	80.5	-	86.2	percent
Sulfur Dioxide, SO_2	0.7	-	1.4	lb/million Btu
Nitrogen Oxides, NO_x	0.41	-	1.45	lb/million Btu
Particulates:				
Uncontrolled	0.09	-	1.25	lb/million Btu
Controlled	0.001	-	0.014	lb/million Btu
Opacity, Uncontrolled	3	-	19	percent

The particulates were characterized via mass loadings, impactors, in-situ resistivity measurements, ultra-fine sampling, optical large particle sampling, five-stage cyclone sampling and chemical analysis of various cut sizes. A three-field pilot electrostatic precipitator (ESP) containing over 1000 square feet of plate collection area, a reverse air fabric filter pilot dust collecter and a commercial pulse-jet fabric filter dust collector were operated at high collection efficiency.

Experience gained during these tests on the 700 hp boiler will be valuable in making recommendations for future tests and will provide a basis for conversion of industrial oil-fired boilers to SRC fuels.

TABLE OF CONTENTS

PAGE

I. INTRODUCTION AND SUMMARY

Solvent refining of coal is a process that could make use of our country's vast coal reserves while minimizing the impact on the environment. Solvent Refined Coal (SRC) is relatively ash and sulfur free and has a significantly higher heating value than raw coal.

SRC products are formed in a process which involves the dissolution and hydrogenation of pulverized coal in a process-derived solvent. Hydrogenation of the coal results in the removal of substantial portions of sulfur and oxygen as well as minor amounts of nitrogen. The process stream is flashed to release light gases, de-ashed using the Critical Solvent De-ashing process (CSD), and fractionated to separate byproduct gases, net distillate liquids, recycled process solvent, and the solid SRC Fuel product. SRC Fuel is the hydrocarbon fraction with a boiling point of 850°F or more.

As indicated, coal refining consists primarily of adding hydrogen to the carbon in coal while removing most of the sulfur and ash -- the two chief pollutants in bituminous coals. In the SRC Fuel process, raw coal is pulverized, mixed with solvent derived from the process, and heated under pressure in a fired heater. Hydrogen produced by gasifying coal and process residues is added to the coal/solvent mixture and the mixture flows into a reactor vessel where liquefaction is completed. The mixture then flows to separation and de-ashing steps where sulfur and ash are removed. The first series of operations yields naphtha and distillate liquid product streams and a small quantity of gas which are recycled into the process as fuel. Most of the sulfur present in the raw coal feedstock is drawn off in this series of operations as hydrogen sulfide which is subsequently converted to elemental sulfur.

The chief product of this first process stage is SRC Fuel which, when cooled, becomes a shiny black solid material. The heating value of SRC Fuel approximates that of No. 6 fuel oil and is approximately 45 percent higher than that of the raw bituminous coal from which it is derived (about 16,000 Btu/lb, versus 11,000 Btu/lb for raw coal). The mineral ash content of SRC Fuel is comparable to No. 6 fuel oil (0.1 percent).

In the second stage of the process, a portion of the SRC Fuel is treated with hydrogen in a catalytic hydrocracker to produce additional distillate fuels, petrochemical and gasoline feedstocks, and very low sulfur solid and residual fuels. These products are referred to as two-stage liquefaction (TSL SRC) products.

The Residual Fuel Oil is produced by blending the SRC Fuel or the TSL SRC Fuel with the distillate fuel oils produced in each stage of the process. Thus the SRC Residual Fuel Oil is comprised of SRC Fuel and first-stage fuel oils (400° to 850°F); the TSL SRC Residual Fuel Oil is comprised of TSL SRC Fuel blended with both first- and second-stage oils (400° to 850°F). Since all the stocks blended are liquids, they both form heavy liquid products rather than slurries.

This direct coal liquefaction process yields approximately three barrels of oil-equivalent products per ton of coal versus two barrels per ton of coal from indirect coal liquefaction. Furthermore, the low consumption of hydrogen and self-contained hydrogen generation make the process less costly(11).

The development of the SRC process began in 1962 when the Office of Coal Research awarded a contract to Spencer Chemical Company to study the feasibility of removing ash from coal thereby making it more economical to transport. Spencer completed the contract in 1965, successfully demonstrating that the process worked in their 50-pound per hour laboratory model. After the success of the small-scale unit, the government contracted with the Pittsburg and Midway Coal Mining Company to scale-up the process in 1966. In 1972, a plant capable of processing up to 50 tons per day was built at the U.S. Army's Ft. Lewis near Tacoma, Washington. The plant began operating in 1975.

In addition to the government's efforts on SRC research and development, the Edison Electric Institute and Southern Company Services teamed together in 1972 to study the key steps in the SRC process. Consequently, Catalytic, Inc. was awarded a contract to design, build, and operate a 6-ton per day pilot plant at Wilsonville, Alabama. Construction of the plant was completed in 1973. That same year, the Electric Power Research Institute (EPRI) assumed the responsibilities of the Edison Electric Institute. In 1976, the U.S. Energy Research and Development Administration (ERDA), now the Department of Energy (DOE), began funding work at the Wilsonville plant.

Combustion testing of SRC was first conducted in a test furnace at Babcock and Wilcox Company in 1964(2). In 1976, independent testing was performed in a 500 lb/hr solid fuel combustion test facility at DOE's Pittsburgh Energy Technology Center (PETC)(3), in a solid fuel burning test facility at Combustion Engineering, Inc.(4), and in a Stirling boiler at Babcock and Wilcox(5). A full-scale boiler test was performed at Georgia Power Company's Plant Mitchell site in 1977(6).

Due to the success of both the Ft. Lewis and the Wilsonville plants, the Department of Energy (DOE) took the next step in preparing the solvent-refined coal technology for commercial use in 1978. At this time contracts were awarded to International Coal Refining Company (ICRC) - a joint venture of Air Products and Chemicals and Wheelabrator-Frye, Inc. (WFI) - for the design, construction, and operation of 6000-ton per day "modules" of a commercial SRC plant near Newman, Kentucky.

Although, SRC was burned successfully in the coal-designed utility boiler at Plant Mitchell, the viability of SRC as a replacement fuel in more compact oil- or gas-designed units at significantly higher heat liberation rates remained uncertain. Thus, in 1980, ICRC was commissioned by DOE to ascertain the technical and marketing aspects associated with burning SRC in oil- and gas-designed boilers. It was determined that the most economical and expedient way of obtaining the necessary information on technical feasibility and boiler scale-up was through a test program to be conducted at the PETC combustion test facilities which include 100 hp firetube and 700 hp watertube oil-designed boilers.

The first phase of the PETC combustion test program was completed in October, 1980. It demonstrated that SRC in pulverized, slurried and melt forms could be successfully fired in the 100 hp four-pass firetube boiler designed for burning oil at very high volumetric heat release rates(1). When firing the slurry of pulverized SRC/SRC process solvent and the SRC melt, full boiler rating was obtained, and carbon conversion efficiencies were high (99.8 percent and 99.4 percent, respectively). The boiler was intentionally operated at half load, with the pulverized SRC, to enable use of available burners previously developed at PETC for pulverized SRC fuels. During these tests, carbon conversion efficiency was 99.2 percent. Part of the boiler flue gas was diverted through a field comparator, which is a reverse air pilot filter. The field comparator exhibited excellent particle collection efficiency.

Phase II of the SRC combustion test program at PETC was implemented in the 700 hp Combustion Test Facility. The primary objective of Phase II was to attain successful combustion of SRC fuels in this watertube boiler, which was designed for firing oil at heat release rates typical of those used in industrial boilers. The program also involved determination of appropriate fuel handling procedures, combustion characteristics, flue gas emissions and particulate control equipment design. The SRC fuels evaluated in this program were pulverized SRC Fuel, SRC Residual Fuel Oil (pulverized SRC dissolved in SRC process liquids), and an SRC/Water Slurry. For the particulate control studies, a mobile electrostatic precipitator (ESP), a field comparator, and a pulse-jet baghouse were utilized. Wheelabrator-Frye Science, Inc. and Southern Research Institute were responsible for operating and evaluating the performance of the ESP.

The 700 hp boiler is one of three oil-designed boilers comprising the Liquid Fuel Combustion Test Facility at PETC. The 700 hp boiler facility consists of a Nebraska 700 hp, two-drum, "D" type, watertube, industrial package boiler originally designed for oil firing. A schematic of the test facility is shown in Figure 2. The construction of the boiler and related support systems was completed in the fall of 1978. Previous testing in the 700 hp boiler included the following: parametric studies with No. 6 fuel oil and 30 percent, 40 percent and 50 percent Pittsburgh seam coal-oil-mixtures (COM); a 500-hour duration test with a 40 percent COM; a COM particle size test series utilizing three different particle size distributions; a coal type COM test series utilizing Illinois, Montana Rosebud, and Pittsburgh seam coal; a COM Dual Air Zone register performance test series; a COM radiant section sootblower test series; parametric coal-water-mixture (CWM) testing with Pittsburgh seam coal utilizing a Single Air Zone (SAZ) register; and, finally, a CWM test series utilizing a coal that had been beneficiated (physically treated to lower ash and sulfur content).

On August 16, 1982, baseline oil testing, the first of the four series of SRC fuels testing, was initiated. In order to accomplish this testing, a multifuel burner assembly containing a Coen No. 6 fuel oil gun was retrofitted to the boiler. This slow mix burner assembly was a modified version of the one designed by Beard, Diaz, Weidman and Associates, Inc. Inherent in the slow mix burner design was the capability of supplying primary or center air during the No. 6 fuel oil combustion tests. Primary air was, in fact, used to a very slight degree to aid in refining critical combustion emission levels. Baseline oil testing was performed for three weeks, the last two weeks of which were used to evaluate the mobile ESP. To simulate actual utility boiler conditions and to establish a common baseline for the last three phases of SRC fuels testing, preheated secondary air was utilized for these No. 6 fuel oil tests. Problems encountered during testing were the initial inability to properly shape the flame due to a malfunctioning atomizing steam differential pressure regulator and occasional boiler shutdowns due to difficulties with the boiler feedwater chemistry.

The second series of SRC fuels testing involved the combustion of SRC Fuel in a pulverized form. The particle size distribution for this testing was 90 percent minus 200 mesh. Facility modifications included the installation of a SRC Fuel feed bin and transport system. Existing coal storage, pulverization and transport systems in an adjacent building were modified for use in this test program. A slight modification of the slow mix burner was performed to permit the removal of the No. 6 fuel oil burner gun when firing SRC Fuel. SRC Fuel testing was begun on October 18, 1982, and lasted for a period of five weeks ending on November 19, 1982. In conjunction with these combustion tests, ESP performance studies were also conducted during the middle and latter portion of this five-week period. Major problems encountered during this testing with the slow mix burner included the following: SRC Fuel flow fluctuations to the boiler; clinker formation or fouling of the SRC Fuel burner tip; and the need to use a natural gas support flame during the SRC Fuel duration tests. These problems and the numerous modifications made to the original system designs (Section V.B.2) are described in Appendix C, Section B of this report.

A second set of SRC Fuel combustion tests was performed during the period from January 25, 1983 to February 2, 1983 using the fast mix burner designed at PETC. This 5-inch water-cooled burner, with an adjustable water cooled cone, eliminated the clinker formation that was a major problem when using the slow mix burner in earlier testing. The success of the fast mix burner was directly attributable to the higher SRC Fuel burner exit velocities and the maintenance of moderately cool burner and cone surfaces, preventing clinker formation.

The third series of SRC fuels testing involved the combustion of SRC Residual Fuel Oil, a 50/50 mixture of pulverized SRC Fuel dissolved in the SRC process solvent. These tests were performed for two weeks beginning on December 6, 1982. Again, ESP and fabric filter evaluations were performed during this phase of testing. Facility design modifications were the installation of a heated 2500-gallon SRC Residual Fuel Oil storage tank and a SRC Residual Fuel Oil fuel train including a fuel heater capable of raising the temperature of the SRC Residual Fuel Oil above 300°F. No problems were encountered during this third series of SRC fuels testing.

The fourth series of the SRC fuels testing program involved combustion of a pulverized SRC/Water Slurry fuel containing 66 percent SRC Fuel and 33.5 percent water. In order to promote good mixing and attain a maximum SRC Fuel concentration, a viscosity reducing agent was mixed into the fuel as part of the liquid phase, comprising 0.5 percent by weight of the total fuel mixture. SRC/Water Slurry testing began on January 3, 1983, and was performed for a period of two weeks ending on January 14, 1983. As in all phases of SRC fuels testing, ESP and fabric filter evaluation tests were performed. Facility modifications were minimal since the existing coal-water-mixture fuel preparation and transport systems needed only to be reinstalled. A minor problem encountered during this final series of SRC fuels testing was occasional clinker buildup experienced on the fuel burner nozzle causing key combustion emission levels to fluctuate. The Coen No. 6 fuel oil burner with a nozzle cap consisting of eight 15/64-inch nozzle orifices was utilized.

In this report, the day-to-day test activities of the SRC Phase II program are described. Combustion test data(7) compiled during these tests is presented and final conclusions and recommendations are given.

II. SUMMARY FUEL COMPARISON

The heating value of alternate fuels is a major concern to those who might substitute them for conventional fuels, since fuels with lower heating values would be required in larger quantities. The heating values of the SRC fuels tested during Phase II of the SRC Fuel test program were typically lower than those of the No. 6 oil baseline fuel. For this reason, fuel flow rates were higher for the SRC fuels.

The SRC fuels differed in chemical composition from the No. 6 oil as expected. The carbon/hydrogen ratios of the SRC fuels were higher than those of the No. 6 oil while the sulfur content was in the same range. Nitrogen and oxygen contents were typically higher and lower, respectively. Ash contents of the SRC fuels were comparable to that of the No. 6 fuel oil.

The emission levels of the SRC fuels differed from those of the No. 6 oil. SRC fuels particulate emissions were on the order of 30 times higher than those of the No. 6 oil. While SO_2 levels were in the same range, NO_x levels were typically higher for the SRC fuels due to the higher fuel bound nitrogen.

During the SRC combustion test program, SRC was fired in three different forms--solid, liquid and slurry. Each form presented its own set of handling and operating requirements. Below is a brief summary of the requirements for each of the SRC fuels tested:

SRC Fuel and SRC/Water Slurry were prepared on site by GE/MATSCO personnel. Crushed SRC Fuel was delivered by railcar to PETC. The SRC Fuel was then pulverized in a rotating hammermill pulverizer to a particle size distribution of 90 percent minus 200 mesh. The pulverized fuel was then fed to and stored in the Petrocarb pulverized fuel injection system.

For the SRC Fuel tests, the SRC Fuel was conveyed pneumatically by the Petrocarb pulverized fuel injection system to a 400-cubic foot storage bin. From there the fuel was fed through a Vibra Screw feed system to a blower system which injected fuel through the specially designed SRC Fuel burner.

For the SRC/Water Slurry tests, the SRC Fuel was fed pneumatically by the Petrocarb pulverized fuel injection system to an 18-ton storage bin. From the storage bin, SRC Fuel was fed by gravity to the SRC/Water Slurry mix tank and mixed with water and a dispersant, Lomar-D, to make "batches" of SRC/Water Slurry. The fuel was then pumped to the burner where it was atomized by air through a modified nozzle.

SRC Residual Fuel Oil required two system modifications. After preparation by Catalytic, Inc., at Wilsonville, Alabama, the SRC Residual Fuel Oil was delivered in ready-to-fire form in insulated tank trucks. Due to the viscous nature of SRC Residual Fuel Oil, the fuel had to be stored on site in a tank heated to 200°F. Heating to 300°F was necessary to atomize the fuel at the burner. In comparison, No. 6 fuel oil must be maintained at 100°F when in storage and must be heated to 220°F to atomize at the burner.

III. COMPARISON OF FUELS

A. General

Four different fuels were evaluated during the SRC fuels combustion test program. SRC was tested in three different forms: pulverized SRC Fuel, SRC Residual Fuel Oil and SRC/Water Slurry. No. 6 fuel oil was also tested to provide baseline data for comparison purposes.

B. SRC Fuels Specifications

Table 28 presents a summary comparison of the fuels tested during the SRC fuels test program. Higher heating values of the No. 6 oil tested (both batches) were slightly lower than the published value of 18,126 Btu/lb(9) due to the large amounts of moisture content in the fuel (~3 to ~6 percent). The heating values of the SRC fuels were lower than those of the No. 6 oil ranging from 10,543 Btu/lb to 16,808 Btu/lb. The lower Btu content of the SRC/Water Slurry (10,543 Btu/lb) on a wet basis was due to the large amounts of water needed to prepare the fuel in slurry form. The higher Btu content of the SRC Residual Fuel Oil (16,808 Btu/lb) was due to the lower moisture content in the fuel and the presence of the process solvent in the fuel.

Because a constant thermal input of 30×10^6 Btu/hr is required to operate the boiler at full load conditions (~24,000 lb/hr of saturated steam at 175 psig), fuels of lower Btu content must be fired at higher fuel flow rates. This can be seen in Table 28. The No. 6 oil (Batch B) had the highest Btu content of 18,109 Btu/lb and consequently the lowest fuel flow rate of 1492 lb/hr. The SRC/Water Slurry had the lowest Btu content of 10,543 Btu/lb on a wet basis and consequently the highest fuel flow rate of 2554 lb/hr.

Boiler efficiencies were also affected by the amount of moisture present in the fuel. Typical boiler efficiencies at full boiler loads and excess air levels ranging between 13.5 to 28.8 percent for the fuels tested are shown in Table 28. As can be seen, the fuels with higher moisture content generally had lower boiler efficiencies.

The ultimate analysis of typical samples of each of the four fuels is shown in Table 28. The moisture content of the SRC Residual Fuel Oil and the SRC Fuel was quite low (~1/4 percent). Moisture in the No. 6 oil varied from ~3 percent to ~6 percent. The highest moisture content was present in the SRC/Water Slurry (33.7 percent).

The carbon content of the SRC Fuel and SRC Residual Fuel Oil was very close to those of the No. 6 fuel oil, varying by less than 6 percent. Hydrogen content in the SRC fuels was somewhat lower than those of the No. 6 oil. This is due to the fact that the SRC fuels are derived from coal which contains less hydrogen than oil. Nitrogen content of the SRC fuels was much higher than those of oil (5 to 10 times higher). The sulfur content of the fuels tested was similar to or slightly larger than that of No 6 fuel oil. The percentages of inherent oxygen in the fuels were closely grouped. Ash content of the SRC Fuel and SRC Residual Fuel Oil was in the range of that of No. 6 oil (~0.10 percent). The SRC/Water Slurries had a higher ash content (0.0027 to 0.0055 lb ash/lb slurry) due to the addition of ½ percent by weight of Lomar-D additive.

Carbon/hydrogen (C/H) ratios were computed from the typical fuel analysis and are given in Table 28. The C/H ratios of the SRC fuels were higher than those of the No. 6 oil. SRC Fuel had the highest C/H ratio. The lowest C/H ratio was for the No. 6 oil Batch A which had the highest moisture content.

Stoichiometric air/fuel (SA/F) ratios were calculated from each typical fuel analysis. The SA/F values were closely grouped for the SRC Fuel and the liquid fuels.

C. **Emission Levels**

The amount of the chemical constituents in the fuel has an effect on the amounts of emissions. A comparison of flue gas emissions for the various SRC fuels can be seen in Table 28. SO_2 emissions are generally higher for fuels which contain more sulfur. For this reason, the SRC Fuel and the SRC/Water Slurry had higher SO_2 emissions than the No. 6 fuel oil tested. SRC Residual Fuel Oil had lowest SO_2 emissions due to a lower sulfur content in the fuel. NO_x emissions are affected by a number of factors. Generally, NO_x levels are lower at lower excess air levels and lower combustion air temperatures. Nitrogen content in the fuel has the most significant effect on NO_x emissions, however. As shown in Table 28, the SRC fuels exhibited NO_x emissions that were more than six times higher than when burning No. 6 fuel oil containing less nitrogen. Particulate emissions for the SRC fuels were much higher than those for the No. 6 oil. This is due to the larger percentages of ash in the coal-derived SRC fuels. The carbon content found in the particulate emissions varied widely. The SRC Fuel generally had the highest amount of carbon present in the particulate. The lowest levels of carbon were found in the No. 6 fuel oil particulate emissions. Mass train sampling for determination of particulate emissions was performed by PETC and WFI personnel using the ASME method(8) and EPA method(10), respectively. Despite the use of the two different sampling methods, very similar particulate emission levels were measured by both personnel groups during testing of the SRC fuels. Results from these tests can be seen in Table 29.

D. Combustion Test Data Results

All combustion tests performed during the SRC Phase II program were conducted at full boiler steam load of ~24,000 lb/hr. Secondary air temperatures ranged from 500°F to 600°F. Depending on the fuel being fired, excess air levels varied from 12.1 to 42.4 percent.

Carbon conversion efficiencies during all fuel firing modes were generally $\geq$97.7 percent. As expected, No. 6 fuel oil and SRC Residual Fuel Oil exhibited the highest carbon conversion efficiencies at 99.98 and 99.9 percent, respectively. Carbon conversion efficiencies of SRC/Water Slurry fuels were most nearly the same as that of the SRC Fuel fast mix burner tests at 98.9 percent and 98.7 to 99.3 percent, respectively. Carbon conversion efficiencies experienced when performing the first portion of SRC

Fuel testing with the slow mix burner were in a range between 97.8 and 98.9 percent

Boiler efficiencies were highest for SRC Residual Fuel Oil and SRC Fuel testing of the fast mix burner at 85.4 percent and 84.1 to 85.6 percent, respectively. Although the first portion of SRC Fuel tests with the slow mix burner exhibited lower carbon conversion efficiencies than No. 6 fuel oil tests, boiler efficiencies were similar at a range between 81.1 to 83.2 percent and 82.6 percent, respectively. Boiler efficiencies when burning SRC/Water Slurry were also similar at 81.9 percent.

Particulate emissions, as determined by isokinetic testing, were higher for SRC/Water Slurry testing than SRC Fuel testing with the fast mix burner, ranging between 0.74 lb/MBtu to 1.00 lb/MBtu. Particulate emissions for SRC Fuel testing with the fast mix burner ranged between 0.44 lb/MBtu to 0.79 lb/MBtu. This difference was due to the increased ash content of the SRC/Water Slurry fuels caused by the addition of Lomar-D, a viscosity reducing agent which contained 35 percent inorganic ash. Particulate emissions were highest at 0.72 lb/MBtu to 1.25 lb/MBtu for SRC Fuel testing utilizing the slow mix burner. Particulate emissions were lowest for SRC Residual Fuel Oil and No. 6 fuel oil at ranges of 0.093 to 0.196 lb/MBtu and 0.02 to 0.04 lb/MBtu, respectively.

The magnitude of SO_2 emissions is directly related to the sulfur content of the fuel. SRC Residual Fuel Oil and No. 6 fuel oil contained the lowest sulfur contents of 0.44 weight percent and 0.64 weight percent, respectively, of any of the fuels tested during the SRC Phase II program.

Consequently, SO_2 emissions were lowest for SRC Residual Fuel Oil and No. 6 fuel oil at 0.73 lb/MBtu and 0.94 lb/MBtu, respectively. SO_2 emissions were slightly higher for SRC Fuel testing of the fast mix burner at a range of 0.98 lb/MBtu to 1.14 lb/MBtu. Higher SO_2 emissions were obtained with SRC Fuel when utilizing the slow mix burner and were in a range between 1.17 lb/MBtu to 1.39 lb/MBtu. Similar high SO_2 emissions of 1.32 lb/MBtu were realized when testing SRC/Water Slurry fuels. These higher SO_2 emissions were expected when burning the SRC Fuel in either pulverized or slurried form due to its higher sulfur content of 0.90 weight percent.

Similarly, NO_x emissions are related to the level of fuel bound nitrogen. NO_x emissions were lowest for No. 6 fuel oil testing at 0.29 lb/MBtu and slightly higher for SRC Residual Fuel Oil at 0.71 lb/MBtu. Fuel nitrogen contents of No. 6 fuel oil and SRC Residual Fuel Oil were 0.22 weight percent and 1.35 weight percent, respectively. NO_x emissions were in a range between 0.63 lb/MBtu to 1.45 lb/MBtu when testing SRC Fuel with the slow mix burner. NO_x emissions ranged from 1.17 lb/MBtu to 1.37 lb/MBtu when utilizing the fast mix burner during the last phase of SRC Fuel testing. Nitrogen content of SRC Fuel was 2.00 weight percent; therefore, the higher NO_x emission levels resulted. NO_x emissions of 0.49 lb/MBtu obtained during SRC/Water Slurry testing were lower than that obtained during SRC Fuel testing due to the lower flame temperature experienced when burning SRC/Water Slurry. The formation of NO_x during combustion is also a function of the combustion flame temperature.

E. Comparison of Fuel Preparation, Handling, Storage and Transport

A range of modifications, varying in magnitude were performed on the 700 hp CTF to accommodate each different fuel firing mode of the SRC Phase II program. Because the necessary equipment and facilities were already in place, modifications for the No. 6 fuel oil program were minimal. However, major installations and existing systems retrofitting were required to accomplish the SRC Fuel, SRC/Water Slurry and SRC Residual Fuel Oil test plans. In all cases, an emphasis was put on the utilization of the existing facility equipment to successfully perform the SRC Phase II program.

SRC Residual Fuel Oil and No. 6 fuel oil were both received onsite in a ready-to-fire form. No. 6 fuel oil, of course, required no preparation; whereas, the SRC Residual Fuel Oil was prepared by Catalytic, Inc., at Wilsonville, Alabama and shipped to PETC in six insulated 6000-gallon tank trucks. No major modifications were required to ready the 700 hp CTF for No. 6 fuel oil testing as the existing facility's No. 6 fuel oil storage and transport system were fully utilized. Modifications that were made prior to the No. 6 fuel oil test period are detailed in Section V.A.2. Modifications to accommodate SRC Residual Fuel Oil storage and transport were minor when compared to a No. 6 fuel oil setup. A 2500-gallon fuel storage tank, fuel transport and fuel heating system were installed prior to this program's inception. SRC Residual Fuel Oil, due to its viscous nature, had to be stored at a temperature of 200°F and heated to 300°F before being atomized. In contrast, No. 6 fuel oil can be stored at a temperature of 100°F and must only be heated to 220°F before being atomized.

The engineering design and installation of the SRC Residual Fuel Oil fuel storage and transport system are detailed in Section V.C.2.

The preparation of both SRC Fuel and SRC/Water Slurry was performed at the PETC site. Crushed SRC Fuel was unloaded into the existing 20-ton storage hopper at Building 89 and from there was sent to the ACM-10 rotating hammermill pulverizer where it was pulverized to a particle size consisting of 90 percent minus 200 mesh. The ACM-10 pulverizer fed the Petrocarb pulverized fuel injection system in Building 89. The Petrocarb system was utilized to store approximately 6 tons of SRC Fuel and to deliver the SRC Fuel to either the 400-cubic foot Vibra Screw SRC Fuel feed bin, located approximately 220 feet away, or to an existing 18-ton SRC Fuel storage bin located above the SRC Fuel slurry mix tank in Building 93. A primary air blower was installed in conjunction with the 400-cubic foot SRC Fuel feed bin to pneumatically transport the SRC Fuel to the boiler for combustion. This is detailed in Section V.B.2. In the preparation of SRC/Water Slurry fuels, the SRC Fuel was gravimetrically fed into the existing 1800-gallon mix tank which had been pre-charged with a measured amount of water. The existing coal-water-mixture transport system was utilized to store and convey the SRC/Water Slurry fuel to the boiler for combustion. This system is detailed in Section V.D.2.

No major problems were encountered during the preparation, storage, and transporting of any of the liquid fuels, (i.e., No. 6 fuel oil, SRC Residual Fuel Oil, and SRC/Water Slurry) during the SRC Phase II program. However, this was not the case during SRC Fuel testing, as fuel transport problems plagued most of the test series. These problems were due to the incapability of the PETC facility to deliver SRC Fuel to the boiler via on-line pulverization. Critical to the maintenance of a steady fuel flow in a pre-pulverization firing mode was the maintenance of a non-fluctuating static pressure within the 400-cubic foot SRC Fuel storage bin and screw feed hopper. This problem was alleviated somewhat by the installation of a back-pressure-regulating valve on top of the SRC Fuel bin, maintaining the bin under a positive nitrogen pressure of ~32 inches W.C. In addition, several nitrogen purge and/or fluidizing taps were located on the bin bottom and/or the feed screw hopper, the feed screw hopper being pressurized to ~10-15 inches W.C. Another factor that was critical in maintaining a non-fluctuating fuel flow was the maintenance of a primary air velocity such that fuel saltation was not an occurrence. Saltation is the settling of the pulverized solid fuel from the primary air conveying line onto the inner walls of the transport line. Saltation is characterized by the following: (1) a steady decrease in primary air flow during steady-state full load operating conditions; and (2) a spike or sudden increase in steam flow, carbon monoxide emission levels, and opacity emission levels, these parameters returning immediately to their former steady-state values. The steady decrease in primary air flow is considered to be an indication of the SRC Fuel dropping out of the conveying air stream, becoming deposited on the inner walls of the transport line, and causing an increase in pressure drop and resultant decrease in primary air flow. The occurrence of steam flow, carbon monoxide and opacity spikes may be the result of the SRC Fuel on the inner walls of the transport line breaking loose and becoming entrained in the fuel stream causing a sudden increase in fuel flow while a constant input of combustion air is being maintained. Evidence of saltation was prevalent during the first three weeks of testing. However, after staging two blowers in series to boost the primary air capacity, and as a result the primary air velocity, no evidence of saltation was observed during the final week of steady-state duration testing. The above stated fuel feed problems were not an occurrence at the Plant Mitchell SRC Fuel Burn Test(6), as fuel feed was performed by on-line pulverization.

An isolated problem encountered in the transport of the SRC Residual Fuel Oil, due to its viscous nature, was a boiler tripout due to fuel line plugging at the Micro Motion mass flowmeter. So that testing could continue, the upper range of the fuel line pressure switch was increased. Over the course of that day's testing the fuel pump discharge pressure slowly dropped to a normal level, indicating dissolution of the fuel line restriction.

A similar problem of high fuel line pressure was also encountered during initial SRC/Water Slurry testing with a SRC/Water Slurry fuel containing a 68 percent solids concentration. Due to the high viscosity of the SRC/Water Slurry at this concentration, high fuel pump discharge pressures were being experienced and were a detriment to testing. To alleviate this problem, the concentration of the SRC/Water Slurry was decreased to 67 percent and testing was conducted without any further high fuel pressure problems.

F. Comparison of Facility Operating Conditions

Boiler operations during each fuel firing mode were similar in that the boiler was generally shut down in the late evening and early morning hours during daily parametric testing, as evaluation of the mobile ESP was not required. During steady-state duration testing of each fuel, the boiler was operated during the night to maintain a constant heat flux through the ESP, facilitating its performance evaluation. At times, nighttime operation of the boiler was performed with the particular fuel being evaluated, depending on its supply. This was never the case with the SRC/Water Slurry due to the limited quantities that could be produced daily.

Combustion of the liquid fuels, No. 6 fuel oil, SRC Residual Fuel Oil, and SRC/Water Slurry was carried out with very few problems. Exceptions to this were the initial inabilities to maintain both No. 6 fuel oil and SRC Residual Fuel Oil flame shapes in a concentric ball, rather than one that exhibited eight distinct fingers. These fingers correspond to the eight nozzle orifices of the fuel burner nozzle emitting the liquid fuel in a distinct stream, not having been properly atomized. These problems were eventually alleviated by maintaining the proper atomizing steam-to-fuel pressure differential. Atomization of the SRC/Water Slurry was performed using high pressure air as in coal-water-mixture combustion. Both No. 6 oil and SRC Residual Fuel Oil test periods utilized the Coen No. 6 fuel oil burner nozzle cap with eight 5/32-inch orifices. To accommodate the higher fuel and atomizing steam pressures experienced at the burner when firing SRC Residual Fuel Oil compared to No. 6 fuel oil, the center hole of the nozzle body was increased from 1/2 inch to 11/16 inch. SRC/Water Slurry testing utilized the Coen coal-water-mixture burner gun and nozzle with eight 15/64-inch orifices in the nozzle cap. A similar partially opened single air zone (SAZ) register louver setting for both No. 6 fuel oil and SRC Residual Fuel Oil test periods was utilized. This, in conjunction with a co-current diffuser, imparting a rotational swirl to the primary air in the same direction as that imparted by the secondary air, yielded similar flame appearances. Both No. 6 fuel oil and SRC Residual Fuel Oil flames were in the shape of a ball, centered concentrically in the firebox, and bright orange in color. In addition, the length of each of these flames was approximately half the length of the firebox.

In contrast, the SRC/Water Slurry and SRC Fuel flames were longer and narrower in shape, both of these firing modes utilizing the counter-current diffuser to impart a swirl to the primary air that was counter to that of the secondary air. The SRC/Water Slurry flame, with respect to that of the SRC Fuel, was slightly shorter and wider, the SRC Fuel flame length being approximately 80 percent the length of the firebox.

The occurrence of clinkers or buildup of melted SRC Fuel on the tip of the SRC Fuel burner was the most significant detriment to the successful combustion of the SRC Fuel. In order to avoid this clinker formation problem, an optimum primary air velocity had to be maintained at the exit of the SRC Fuel burner through proper burner design. In addition, the burner surface temperature had to be maintained at a relatively low level such that the SRC Fuel could not melt, adhere to its surface, and cause clinker formation. Figure 11.F details the design of a water-cooled SRC Fuel burner (fast mix burner) that did in fact eliminate this fouling problem, as demonstrated in a final SRC Fuel test series utilizing the fast mix burner at PETC. The deposition of SRC Fuel minus its volatile matter on the tip of the Coen burner cap during SRC/Water Slurry testing was the only combustion problem experienced during this test period. The sporadic occurrence of these deposits affected emission levels to a slight degree.

IV. CONCLUSIONS AND RECOMMENDATIONS

The principal goal of demonstrating the combustion of SRC fuels in an oil-designed boiler was successfully achieved as a result of the combustion tests in PETC's 700 hp watertube boiler. The boiler was operated without derating when burning SRC in three different forms; pulverized, slurried with water, and in solution with a process solvent (SRC Residual Fuel Oil).

The carbon conversion efficiencies obtained in all SRC fuels tests conducted at full boiler load were high, ranging from 97.7 to 99.9 percent. The steady-state duration tests, conducted at full boiler load with 600°F air preheat, resulted in average carbon conversion efficiencies of 99.8 percent for SRC Residual Fuel Oil and 98.9 percent for SRC/Water Slurry. Parametric tests, at full boiler load with an average 563°F air preheat, resulted in an average carbon conversion efficiency of 98.9 percent for SRC Fuel when using the improved design fast mix burner.

Average boiler efficiencies obtained in these same SRC Fuel and SRC Residual Fuel Oil tests were higher (84.7 percent and 85.3 percent, respectively) than when burning No. 6 fuel oil (81.9 percent) at full boiler load with 500°F air preheat. The average boiler efficiency obtained in the SRC/Water Slurry tests (81.8 percent) was comparable to when burning No. 6 fuel oil.

The emissions of NO_x were high when burning all three forms of SRC Fuel due to high fuel bound nitrogen. The NO_x emissions when burning SRC/Water Slurry were lower than when burning SRC Fuel under similar operating conditions, due to lower flame temperatures associated with the high water content of the slurry fuel. Due to the short time span available for testing, no attempt was made to minimize NO_x emissions via combustion modifications. Uncontrolled particulate emissions were also high, but results of the different particulate control equipment tests indicate that this equipment can be used to limit emissions to within acceptable limits.

The three different forms of SRC fuels utilized during this combustion program have demonstrated, in most areas, desirable handling and combustion characteristics. The test firings consumed 500 tons of SRC Fuel, 30,000 gallons of SRC Residual Fuel Oil and 20,000 gallons of SRC/Water Slurry.

High NO_x emission levels, due to the high fuel bound nitrogen, indicate the need for site specific NO_x control. In addition, there is a probable need for particulate control when burning SRC Fuel and SRC/Water Slurry. However, particulate emissions may be reduced by burner optimization.

Pre-pulverization and storage of SRC Fuel in that form should be avoided due to the inherent transport problems associated with this type of SRC Fuel firing mode. Therefore, it is recommended that only on-line pulverization be used. In addition, it is critical that cooling of the SRC Fuel be maintained when pulverizing due to agglomeration of the SRC Fuel at elevated temperatures.

The overall test results from the PETC 700 hp boiler SRC combustion tests have proven that SRC is a viable alternate for fuel oil in oil-designed boilers.

V. TEST PROGRAM

A. No. 6 Oil Baseline Tests

1. Combustion Test Plan

The No. 6 oil baseline tests were conducted over a period of three weeks from August 18 to September 3, 1982. During this period all combustion testing was performed at full boiler load. Parametric testing to determine optimum boiler operating conditions was conducted during the first week (August 18 to August 20). Eight parametric tests were conducted at two secondary air preheat temperatures (~500°F and ~600°F) while excess air levels were varied.

Steady-state duration tests were conducted during the second and third weeks of testing (August 23 to September 3). Conditions for these steady-state tests were selected based upon parametric test results. Eighteen steady-state tests were performed at a flue-gas oxygen level of ~2.5 percent with secondary air preheated to ~500°F.

2. Combustion Test Facility

The primary component of the Combustion Test Facility is the 700 hp, two-drum, "D" type package, watertube, industrial boiler designed for oil firing (Figure 1). The boiler was manufactured by the Nebraska Boiler Company and, at full capacity, generates 24,000 pounds of saturated steam per hour at 175 psig, with a heat liberation rate of 47,100 Btu/ft^3-hr.

The furnace (radiant section) is a welded-wall construction of finned, 2-inch-o.d., electric resistance welded carbon steel boiler tubes (Figure 3). In addition, the convection section tubing bank consists of the same 2-inch-o.d. electric resistance welded carbon steel boiler tubes. Four baffles (18 gauge 304 stainless steel plates) are staggered in the convection section to alter the direction of the combustion gases passing from the radiant section, maximizing heat transfer. The open cross-sectional area of the convection section, excluding the baffle, is 8.2 square feet. The cross-sectional area in the plane of the baffle is 4.906 square feet. The convection section is supplied with a sootblower, Boyer Type VH valve-in-head. Two Tate-Jones sight glasses are located on the back furnace wall to afford the boiler operator a view of the flame when making critical boiler operating parameter adjustments. Two additional Tate-Jones sight glasses were installed on the east side of the boiler prior to this program to afford the operators a better view of flame length and the position of the flame relative to the burner.

Boiler interlocks automatically shut the boiler down in the event any of the following occur: (1) loss of the atomization medium; (2) high boiler steam pressure; (3) low boiler water level; (4) low combustion air flow; or (5) excessive pressure at the fuel pump.

The 175 psig steam generated by the boiler is condensed in an air-cooled condenser, collected in a hot well tank, passed through the subcooler section of the air-cooled condenser and back to the deaerator tank. A view of the No. 6 fuel oil flow diagram can be seen in Figure 4.A.

The flue gas leaving the boiler passes through a damper valve which controls the furnace pressure. The flue gas then enters a cooler which uses ambient air to control the flue gas temperature at the cooler exit. Immediately downstream of the flue gas cooler exists a "Y" type "flow splitter" (Figure 5) with a 20-inch diameter inlet and two 16-inch diameter outlets. The 16-inch diameter outlet ducts both incorporate manual flow control valves that enable the diversion of any portion of the flue gas to either the American Air Filter Baghouse or mobile ESP. Separate induced draft fans are located downstream of both the baghouse and mobile ESP to provide the draft necessary for expelling the flue gas to the atmosphere. Flow measurements are performed by using a manometer across the splitter and a flow orifice near the ESP inlet. In order to achieve even flow and particulate distribution to both outlet legs of the splitter, the splitter is positioned a minimum of eight pipe diameters downstream and two pipe diameters upstream of the nearest flow disturbance (tests were performed to verify that even flow and particulate distribution to both outlet legs of the splitter were, in fact, occurring). To further facilitate testing, a by-pass duct is installed around the baghouse with the appropriate flow control valve to divert a portion or all of the flue gas flow around the baghouse.

The reverse air fabric pulse-jet baghouse (Figure 6) contains 120 Huyglas filter fabric bags manufactured by Huyck Felt, Division of Huyck Corporation. These filter bags have a unique resin system which coats and protects the fiberglass from abrasive and corrosive environments by lubricating the glass fibers and preventing fiber-to-fiber abrasion. The bags are cleaned using a pulse of compressed air at 75 psig. The frequency of pulsing was set to maintain the pressure drop across the baghouse assembly between 2 inches and 4 inches W.C.

Number 6 fuel oil is stored in a 60,000-gallon capacity insulated storage tank. The No. 6 fuel oil storage tank is located approximately 250 feet northwest of the CTF and contains an internal steam coil to maintain the No. 6 fuel oil temperature at 100°F. A Brown Fin Tube suction heater then heats the fuel oil from 100°F to 140°F. A Roper Type 1 pump feeds the oil into the building and to the suction side of a variable speed 3 hp progressing cavity Moyno pump. This Moyno pump contains an elastomer liner, Buna-N stator and a 0.010-inch undersized chrome-plated rotor. Located between the suction heater and the 3 hp Moyno pump is a fuel strainer manufactured by Zurn Industries, Inc.

A Brown Fin Tube steam shell-and-tube oil heat exchanger raises the No. 6 fuel oil temperature from 140°F to 220°F immediately upstream of the fuel burner. Measurement of the fuel flow rate is done with a mass flow meter manufactured by Micro Motion, Inc. and a volumetric flow meter.

The combustion air system supplies approximately 6000 scfm of primary and secondary air preheated to a maximum temperature of 600°F. The combustion air supply is obtained by combining heated air from a Joy centrifugal compressor (the air is preheated to 1100°F in two oil-fired, closed-cycle heaters located downstream of the Joy Compressor) with ambient temperature air from a Buffalo Forge forced-draft fan. The temperature is set by controlling the portion of heated air which is added to the ambient temperature air stream.

The source of the primary air was a Buffalo Forge forced-draft fan which was able to supply a volumetric air flow of 1500 scfm at a static pressure output of 24 inches W.C. This blower was located approximately 20 feet south of Building 93. The primary air was conveyed to the boiler via a 6-inch schedule 40 pipe; the flow rate was controlled by a 6-inch air actuated butterfly valve installed immediately upstream of the boiler. Measurement of primary air flow was performed by an 8-inch Brandt Industries flow meter (Figure 7) located upstream of the blower inlet. This 8-inch section of the inlet line also incorporated an 8-inch butterfly valve that would provide a positive shutoff of the primary air flow if actuated by the boiler logic system. A silencer was installed on the suction end of the 8-inch inlet line section.

Instrumentation at the 700 hp Combustion Test Facility includes both continuous on-line and periodic in-flow measurements. With the exception of a few measurements read locally from gauges mounted in the boiler room and acquired by sampling probes, most measurements are transmitted by pneumatic or electric signals to the Data Acquisition System and displayed and/or recorded in the control room (Figure 8). A complete list of all instrumentation and the respective ranges is found in Appendix A.

Flue-gas constituents, namely, O_2, CO_2, CO, SO_x, NO_x, and total hydrocarbons (THC) are measured continuously during each test. Each flue-gas sample is drawn by pump suction through a Pall particulate filter into a Hankinson compressed air dryer, then further dried by a Perma Pure Dryer, and delivered to the gas analyzers. The type and ranges of the gas analyzers used to determine the flue-gas constituent levels are described in Appendix C.

The Data Acquisition System consists of a Digital Equipment Corporation PDP-11/40 computer, a 100-point scanner for electrical signals and a 64-point scanner for pneumatic signals. The scanners are controlled remotely by the PDP-11/40 computer. Signals are accepted six times per minute and their average values are permanently stored on a computer disc. Error due to the Data Acquisition System is less than 0.1 percent of instrument range.

3. Burner Nozzle Selection

The most significant modifications to the 700 hp CTF prior to the No. 6 fuel oil testing were: (1) the replacement of the original Coen No. 6 fuel oil burner with a multi-fuel burner in the existing Coen SAZ-20 air register; and (2) the installation of an accompanying primary air system.

The multi-fuel burner is a modified version (Figure 11.B) of the original design (Figure 11.A) by Beard, Diaz, Weidman and Associates, Inc., which incorporates a guide tube to support and locate the Coen Company

Model No. 2 mV oil burner gun assembly (Figure 9). This guide tube is a 2 1/2-inch schedule 40 steel pipe that is positioned concentrically inside the burner. The guide tube is located on the horizontal center line of the 6-inch long radius elbow that connects the burner to the primary air system. This can be seen in Figure 11.B. A diffuser was positioned on the guide tube to impart a clockwise swirl to the primary air (co-current with the secondary air) being conveyed through the annular space between the water-cooled portion of the burner and the guide tube.

The air register, manufactured by the Coen Company, is a single-air-zone type with a wide-flare refractory throat incorporating a 9-inch offset extension. This Single Air Zone (SAZ) is shown in Figure 10. In addition, a 2-foot 3/8-inch diameter gas ring bustle pipe, with 48 injection holes admitting natural gas as a start-up fuel, surrounds the burner. The basic air register, extended tile throat and gas ring bustle pipe are commercially available equipment. The No. 6 fuel oil atomizer, a Model No. 2 mV type made by the Coen Company, features internal mixing using either steam or air as the atomizing medium. The atomized fuel exits through the nozzle cap which contains eight 3/32-inch nozzle holes at a spray angle of 75 degrees.

4. Combustion Test Operations

No. 6 fuel oil is delivered to PETC by tanker truck and stored in a 60,000-gallon No. 6 fuel oil storage tank (See Section V.A.2). Prior to boiler start-up, the No. 6 fuel oil is circulated through the preheater and back to the storage tank, while other boiler preparation steps are being carried out.

During the first week of the three-week No. 6 fuel oil testing period, parametric boiler tests were performed. Operation of the boiler was conducted on a daily start-up and shutdown basis during this first week since ESP evaluation tests were not being performed. Generally, the boiler was brought on-line with No. 6 fuel oil at 0100 hours each day as per the following procedures.

After fuel oil recirculation was in progress, station steam (100 psig) was cut into the fuel oil preheater and the atomizing steam pressure at the burner set at 25 psig. Immediately following, the remaining systems (boiler feedwater, steam condensate, flue gas, and natural gas) were set up for operation. Number 6 fuel oil flow was then initiated to the boiler; the No. 6 fuel oil flame was ignited by the natural gas pilot. Fuel flow rate for the first forty-five minutes, when the boiler was cold, was at the lowest possible rate (6.8-7.5 lb/min). Once the boiler steam header pressure reached 175 psig and steam flow had been established, boiler steam replaced station steam for fuel atomization. Boiler feedwater chemistry was also checked at this time.

The furnace pressure was set and the No. 6 fuel oil firing rate was gradually increased until full load was established at 0600 hours Excess oxygen was maintained at 3.5-5.0 percent during this process. The specified furnace pressure was set and the flue gas flow directed around the 700 hp baghouse or to the mobile ESP (during steady-state duration boiler testing) as specified. At 0500 hours, the steam sootblowers were activated to clean the boiler convective tube bank. Formal test conditions were then established by 0800 hours after raising the secondary air preheat to the specified temperature at 0700 hours. Generally, two combustion tests, each four hours in duration, were performed each day, with testing ending at 1700 hours Three combustion tests were conducted on the final day of parametric boiler testing.

Upon completion of daily parametric combustion testing, the boiler load was slowly reduced until the boiler was shut down at 2200 hours During the following two weeks of steady-state duration testing, the performance of the mobile ESP was evaluated. Consequently, the boiler was maintained at less than half load during overnight operations to maintain an approximate 300°F temperature at the ESP outlet. Otherwise, combustion test operations for steady-state duration testing were identical to that of parametric testing. Isokinetic sampling to determine flue-gas particulate loading and velocity was performed during each four-hour combustion test for both parametric and steady-state duration testing periods.

All operating data obtained from testing was recorded manually every 30 minutes by boiler operating technicians. A significantly more extensive data collection was performed by the computer controlled Data Acquisition System as described in Section V.A.2. Critical operating parameters (i.e., air, fuel flow, air/fuel ratios, steam flow, etc.) are continuously displayed on video terminals and monitored by the engineering staff.

5. Combustion Test Synopsis

a. Parametric Tests

August 18, 1982, Wednesday - Run 0818SD

Testing was performed at full load boiler conditions and a secondary air temperature of approximately 600°F. Several problems were encountered during the day's test activities. During the first portion of testing (0818-1), the measured flue-gas oxygen level indicated operation at 30 percent excess air. However, a leak was discovered in the flue-gas sampling system and was immediately repaired. Subsequent flue-gas oxygen levels indicated actual boiler operation corresponding to 10 percent excess air (~2 percent flue-gas oxygen) and combustion testing was completed. The second portion of testing (0818-2) was then performed at the original specified conditions of 20 percent excess air (~3.7 percent flue-gas oxygen). The original specified conditions of 30 percent excess air were performed during the third portion of the day's test period (0818-3). For this test it was necessary to bring the ESP induced draft fan on-line to provide the required draft to maintain a 2-inch W.C. furnace pressure when operating at the 30 percent excess air level (~5 percent flue-gas oxygen). Several computer "crashes" occurred throughout the day interrupting data recording. At one point the computer was shut down for repairs. Steam quality, as measured during the test, was poor, indicating a possible feedwater chemistry problem.

August 19, 1982, Thursday - Run 0819SD

The first portion of testing (0819-1) was performed at a 12.5 percent excess air level (~2.4 percent flue-gas oxygen) and a secondary air temperature of 600°F without the occurrence of any major problems. During this test, an intensely bright, ball-shaped flame was observed. Test conditions specified for the second portion of testing (0819-2) required the lowest excess air level possible while still maintaining CO levels under 400 ppm. As a result, an oxygen level in the flue gas of 0.7 percent was established for this test with CO levels averaging approximately 200 ppm. A boiler flameout occurred once due to a low water level in the steam drum. The boiler was brought back on-line and the test was completed. Again, steam quality measurements were poor as the boiler water chemistry was still causing problems.

August 20, 1982, Friday - Run 0820SD

During this day's test period, three combustion tests were performed utilizing a secondary air preheat temperature of 500°F. The first portion of testing (0820-1) was conducted at an excess air level of 12.5 percent (~2.3 percent flue-gas oxygen). During the second portion of testing (0820-2), the excess air level was decreased to the lowest permissible limit while maintaining CO levels less than 400 ppm. Consequently, an excess air level of 3.2 percent (0.7 percent flue-gas oxygen) was established for this test as CO levels averaged 480 ppm. For the third portion of testing, the excess air level was set at 20 percent (~3.7 flue-gas oxygen). Small problems with the flue-gas analysis equipment were experienced requiring the use of a back-up oxygen analyzer for a portion of the second test. Steam quality measurements again indicated that a problem existed with the boiler water chemistry. No other serious difficulties were experienced.

b. Duration Tests

The conditions established for the remaining steady-state tests were based on the previous parametric combustion tests. These conditions were a secondary air preheat temperature of 500°F at an excess air level of 12.5 percent (~2.4 percent flue-gas oxygen). The tests were to be conducted at steady-state conditions for a period of 10 hours' duration per day for five days.

August 23, 1982, Monday - Run 0823SS

Two four-hour combustion tests (0823-1 and 0823-2) were conducted successfully at the specified conditions. Both tests performed well with an excellent flame observed. Steam quality checks showed 99.1 percent indicating that the boiler feedwater treatment problem had been alleviated. The computer had "crashed" during the previous night and was only available for data acquisition for approximately one hour during this test.

August 24, 1982, Tuesday - Run 0824SS

Two additional four-hour combustion tests were carried out at the specified boiler operating conditions (0824-1 and 0824-2). Several minor adjustments had to be made to shape the flame during the setting of test conditions due to moderate flame impingement on the boiler watertubes. These difficulties were caused by a malfunctioning atomizing steam ΔP regulator. Excessively high temperatures (~360°F) at the ESP inlet necessitated the removal of a portion of the flue-gas duct insulation leading to the ESP.

August 25, 1982, Wednesday - Run 0825SS

Additional combustion testing at the specified conditions was originally scheduled; however, numerous boiler flameouts occurred due to a loss of plant power and an unbalanced boiler feedwater chemistry. Eventually, test conditions were set and the boiler was operated for only 1 1/2 hours. A decision to abort the remainder of the test was reached when undesirable flue-gas temperatures at the ESP inlet could not be lowered. No isokinetic samples were taken.

August 26, 1982, Thursday - Run 0826SS

Combustion testing at the specified conditions was performed for two, four-hour runs (0826-1 and 0826-2). Throughout most of the test, great difficulties were encountered in trying to obtain the desired flame shape. Flame impingement, due to the fingers of the star-shaped flame hitting the watertubes in the firebox, was believed to be caused by poor fuel atomization. Again, these difficulties were caused by a malfunctioning atomizing steam ΔP regulator.

August 27, 1982, Friday - Run 0827SS

Two combustion tests were performed at the specified boiler conditions on this day. During the first portion of testing (0827-1) the inability to set the proper atomizing steam/fuel differential pressure at the nozzle was still causing problems with shaping the flame as impingement of the flame on the watertubes still existed. The flame shape was much improved during the second portion of testing (0827-2). The improved flame shape was the result of bringing the boiler load and secondary air preheat down until a ball-shaped flame was established. The boiler was then brought back up to test conditions while maintaining the desired ball-shaped, non-impinging flame. The remainder of the test was conducted without further problems.

August 30, 1982, Monday - Run 0830SS

This test was conducted as specified without any major problems. Flame patterns were good throughout both combustion test runs (0830-1 and 0830-2). A slight fuel flow control problem existed early during the testing period and was quickly corrected. In addition, an anti-foaming agent was periodically added to the boiler feedwater to balance the feedwater chemistry and improve the poor steam quality that existed early in the test.

August 31, 1982, Tuesday - Run 0831SS

The first portion of testing (0831-1) ran very smoothly as all required samples were collected. Several problems arose during the second portion of testing (0831-2) including a computer shutdown and a subsequent momentary interruption of the Data Acquisition System. In addition, a plugged fuel line strainer resulted in a boiler shutdown. This was believed to be caused by the addition of a new load of No. 6 fuel oil into the storage tank churning up bottom residues which in turn caused fuel line strainer plugging. Several additional boiler shutdowns occurred due to low city water pressure before test conditions were re-established and testing concluded.

September 1, 1982, Wednesday - Run 0901SS

Two additional combustion test runs (0901-1 and 0901-2) were performed at the specified test conditions. Difficulty in shaping the flame from its impinging condition early during the test was encountered. The bypassing of the atomizing steam ΔP regulator resulted in the attainment of a much higher atomizing steam/fuel ratio of 0.30 and a desired ball-shaped flame appearance. Generally, the flame appearance throughout the remainder of the test was good and no impingement on the watertubes was evident. However, several times during the course of the test, the boiler experienced flameouts due to a low water level in the boiler steam drum. Boiler feedwater conductivity levels were discovered to be high. Attempts to lower these levels by bottom blowing were initiated and continued numerous times throughout the test. This procedure was also continued during the night following the test.

September 2, 1982, Thursday - Run 0902SS

Combustion test runs (0902-1 and 0902-2) were performed at the specified boiler operating conditions. Some minor problems occurred during the course of the test but were corrected immediately. These problems included a computer shutdown, a malfunctioning oxygen analyzer, and an improper water level in the boiler steam drum. In general, the test ran quite well without problems.

September 3, 1982, Friday - Run 0903SS

The steady-state duration test period for No. 6 fuel oil was concluded with combustion test runs 0903-1 and 0903-2. These combustion tests were carried out at the specified boiler operating conditions. A moderate decrease in the city water pressure occurred during the course of testing, causing a slight decrease in boiler steam flow. The city water pressure was gradually restored without causing a boiler shutdown. Boiler feedwater conductivity was greatly reduced to within acceptable limits as of the beginning of this test. Number 6 fuel oil steady-state tests were concluded.

Cumulative ash deposits removed from the 700 hp boiler firebox after the No. 6 fuel oil tests were of a negligible amount and no weights were recorded.

6. Combustion Test Results and Discussion

Eight parametric tests were performed with No. 6 fuel oil from August 18 to August 20, 1982. Test results are presented in Tables 1 to 3. Table 1 shows the fuel analysis of the actual No. 6 oil samples taken during each test. Nitrogen content in the fuel ranged from 0.21 to 0.26 percent. Sulfur content ranged from 0.63 to 0.68 percent. Moisture contents of these fuel samples varied from 5.8 to 7.8 percent. This higher moisture content in the fuel was due to the low level of No. 6 fuel oil in the storage tank, the oil becoming mixed with the ever-present 3- to 4-inch layer of water on the tank bottom. The higher heating value (HHV) of the fuel oil was in the range of 17,404 to 17,556 Btu/lb.

Table 2 presents the actual boiler operating conditions and performance of these eight parametric tests. All of the tests were conducted at full load conditions with secondary air temperatures of 600°F (first five tests) and 500°F (last three tests). The excess air was varied from 3.1 to 31.0 percent. Average flue-gas temperatures varied from 528°F to 603°F. Carbon conversion efficiencies were all above 99.9 percent. The boiler efficiency varied from 79.6 percent to 83.5 percent and was higher with lower excess air and with higher combustion air temperatures.

Table 3 shows the flue-gas analyses and particulate emissions for the eight No. 6 oil parametric tests. SO_2 emissions were in the range of 0.90 to 0.95 lb/MBtu. These values were higher than those calculated from sulfur content in the fuel analysis. NO_x emissions were in the range of 0.25 to 0.34 lb/MBtu and were generally lower at lower excess air levels and lower combustion air preheat temperatures. Uncontrolled particulate emissions were in the range of 0.02 to 0.04 lb/MBtu.

Based on the parametric tests results, an excess air level of 12.5 percent and combustion air preheat temperature of 500°F were selected to perform the steady-state tests. Table 4 shows the No. 6 fuel oil analyses for these tests. On August 31, 1982, a new batch of No. 6 oil was delivered on site. Subsequently, the moisture content of the new No. 6 fuel oil was reduced by approximately one-half to the range of 3.0 to 4.3 percent; correspondingly, the HHV of the new fuel, increased from approximately 17,500 to slightly over 18,000 Btu/lb.

Table 5 gives the actual boiler operating conditions and performance of the No. 6 oil steady-state duration tests. Carbon conversion efficiencies were all above 99.97 percent. The boiler efficiency varied from 80.6 percent to 82.8 percent. The variations of boiler efficiencies were largely due to the variations of the fuel compositions and atomizing steam pressure and flow.

Table 6 gives the flue-gas analyses and particulate emissions during these steady-state duration tests. SO_2 and NO_x emissions were generally 0.94 lb/MBtu and 0.29 lb/MBtu, respectively. Uncontrolled particulate emissions ranged from 0.02 to 0.04 lb/MBtu. It might be noted, that particulate (isokinetic) samplings were not performed on September 1, 1982 (Test Nos. 0901-1 and 0901-2); the isokinetic sampling data of test No. 0830-2 on August 30, 1982 utilized the same operating conditions and therefore was used for the Test Nos. 0901-1 and 0901-2.

B. SRC Fuel Tests

1. Combustion Test Plan

SRC Fuel tests were conducted over a period of five weeks from October 24 to November 19, 1982, with one additional week of fast mix burner tests from January 27 to February 2, 1983 (six weeks total). Shakedown and parametric testing was conducted during the first week (October 18 to October 25). Four parametric tests were performed during the week. Testing was conducted at two different secondary air preheat temperatures (~500°F and ~600°F) and two different flue-gas oxygen levels (~3.2 percent and ~5.0 percent).

Steady-state duration tests were originally scheduled for two weeks. However, due to problems with the burner and the fuel feed system, testing was extended from two weeks to four weeks. One week was devoted entirely to modifying the fuel feed system and burner assembly in order to improve the system performance.

Nineteen steady-state duration tests were performed during the period from October 26 to November 19, 1982. The slow mix burner (Figure 11.B) was utilized between October 26 and November 5, 1982. The straight 6-inch "Econo" burner was installed during the week of November 8, 1982 and used for the remainder of the steady-state duration tests. Testing was conducted at one secondary air temperature (~600°F) and various flue-gas oxygen levels ranging from 2.7 percent to 6.5 percent.

One additional week (January 27 to February 6, 1983) was spent conducting the PETC fast mix burner tests. Six short-duration tests were conducted during the week at two different secondary air temperatures (~500°F and ~600°F). Flue-gas oxygen levels ranged from 2.7 percent to 5.5 percent.

2. Combustion Test Facility

In the initial planning, the SRC Fuel was to be pulverized in Alabama and transported via truck or rail to PETC. However, it was determined that the combination of extended storage time, possible high ambient temperatures, and motion would compact and cause agglomeration of the pulverized product. Therefore, the PETC facility was used to pulverize the SRC Fuel.

The existing 20-ton coal storage hopper at Building 89 (see Flow Diagram in Figure 4.B) was utilized to store crushed SRC Fuel as it arrived on site at PETC. The MikroPul ACM-10 rotating hammermill pulverizer (Figure 20) in Building 89 was modified to pulverize the SRC Fuel.

The ACM-10 pulverizer fed the pulverized fuel storage and continuous fuel injection system manufactured by Petrocarb in Building 89 (see Figure 12). The Petrocarb pulverized fuel injection system was used to store approximately six tons of pulverized SRC Fuel and to deliver the SRC Fuel to either the 400-cubic foot capacity vibrating bottom SRC Fuel feed bin (Figure 13) located approximately 220 feet away, or to an existing

18-ton capacity pulverized coal storage bin located above the coal slurry mix tank in Building 93.

The 18-ton storage bin in Building 93 was used to store and to transfer SRC Fuel to the 400-cubic foot feed bin using a powder pump, an existing dense-phase pneumatic transport system.

The 400-cubic foot SRC Fuel feed bin (see Figures 14.A and 14.B) was installed in the courtyard just south of Building 93. This bin held 11,000 lbs of SRC Fuel, which is approximately a six- hour supply of fuel. The SRC Fuel was pneumatically transported to the baghouse on top of the feed bin. The feed bin was equipped with a vibrating cone bottom, load cells and explosion vent rupture disc. The bin was maintained under a positive nitrogen pressure (~32 inches W.C.) with a continuous purge venting out the top through a back-pressure regulating valve. Several nitrogen purge and/or fluidizing taps were located on the bin bottom and on the feed screw hopper for use as required, the feed screw hopper being pressurized to ~10-15 inches W.C. A rotary air lock was installed to isolate the baghouse from the feed bin.

An air blower with a 20 hp motor and silencer supplied up to 1500 scfm of primary air at 24 inches W.C. pressure, carrying the SRC Fuel through a 6-inch dilute-phase pneumatic transport line to the boiler some 70 feet distant. The 6-inch transport system was designed to withstand at least a 50 psig explosion pressure, and a similarly designed containment was constructed around the blower. At full load, approximately 1800 lbs/hr of SRC Fuel were fed from the bin into the blower suction using a Vibra

Screw Model HD-2 variable speed feeder (Figure 15). Any agglomeration of SRC Fuel particles that occurred in the handling and storage of the fuel were to be broken up by feeding the SRC Fuel through the primary air blower incorporating a 21-inch diameter wheel rotating at 3600 rpm.

A 6-inch butterfly valve located downstream of the blower was used to control the primary air flow. This flow was measured using a Brandt flowmeter located upstream of the feed screw, which prevented any fuel from fouling the instrument. In addition, an 8-inch automatic butterfly valve was installed upstream of the blower suction, and a knife-gate valve was used at the screw discharge to provide a positive shutoff of the SRC Fuel flow. The SRC Fuel flow diagram can be seen in Figure 4.B.

3. Burner Nozzle Selection

The consulting firm of Beard, Diaz, Weidman and Associates, Inc. was retained by ICRC to design a multi-fuel burner (see Figure 11.A). A constraint that had to be considered when designing the slow mix burner was sufficient room was not available within the 700 hp boiler burner assembly for a dual register burner. In addition, due to the 6.5 foot distance from the boiler front to the rear wall-mounted motor control center, there was insufficient room for a long burner. The original design of the slow mix burner was modified in several ways prior to fabrication (Figure 11.B). First, instead of welding the burner to the Single Air Zone register cover flange, a slide fit and seal arrangement were designed to allow axial movement of the burner during operation. This arrangement also allowed for relatively easy burner removal and maintenance. A gear assembly was incorporated to perform the manual axial burner adjustments. Secondly, instead of welding an elbow to the burner as in the original design, the elbow was flanged to the burner, again for ease of maintenance. It was also necessary to reduce the angle of the elbow from 90° to 67° in order to clear the boiler front instrument panel. Finally, a 6-foot section of flexible hose was used to connect the burner elbow to the primary air line, in place of a rigid pipe. This hose was especially designed for pneumatic conveying with smooth inner walls. It was rated at 100 psi with the ability to dissipate an electrical charge.

Due to operational problems experienced with the slow mix burner the 6-inch "Econo" burner was designed on-site by members of the engineering staff (Figure 11.D).

This burner was similar to the previous 6-inch slow mix burner, with the exception that the 6-inch to 8-inch flared-out conical section at the burner exit was eliminated. This burner, in conjunction with a few fuel delivery modifications, greatly improved but did not eliminate the previous operational problems experienced with the slow mix burner. Due to scheduling requirements, the SRC Fuel steady-state combustion tests were performed with the 6-inch "Econo" burner and a 5 percent natural gas thermal-input.

A final SRC Fuel test series was conducted successfully using a 5-inch fast mix burner with a water-cooled center cone (see Figure 11.F). For this test series the primary air piping was reduced from 6 inches to 4 inches in diameter. This burner performed very well, eliminating the previous operational problems experienced with both the slow mix and 6-inch "Econo" burner. A view of the 5-inch fast mix burner as it is situated with respect to the 700 hp boiler can be seen in Figure 16.

4. Combustion Test Operations

Two-hundred-fifty tons of crushed SRC Fuel (minus 1 inch) were received and stored in five railroad cars at the Hazelwood storage yard, approximately 10 miles from PETC. The SRC Fuel was bottom unloaded onto a portable conveyor and into a covered tri-axle dump truck, each truck carrying approximately 10 tons of SRC Fuel. The MikroPul ACM-10 pulverizer was able to process 1500 lbs/hr of SRC Fuel, doing so at a particle size consisting of 90 percent minus 200 mesh (70 percent through 325 mesh). This pulverization process was performed continuously during the SRC Fuel testing phase, with 30 to 40 tons of SRC Fuel being received and pulverized for each week of testing. The suppression of dust generated by daily pulverization was performed by a baghouse at the entrance to the Petrocarb pulverized fuel storage vessels.

Parametric testing with SRC Fuel was conducted during the first three weeks of the five-week testing period. In general, the boiler was operated on natural gas during the nighttime to maintain a 300°F temperature at the electrostatic precipitator (ESP) exit. A major portion of the flue gas had to be diverted to the ESP during nighttime operations due to the inability to operate at more than 30 percent of full load with natural gas. At or about 0500 hours, the hot air heaters were brought on-line; by 0600 hours hot secondary air was being sent to the 700 hp boiler. Prior to the initiation of SRC Fuel firing at 0700 hours, the following was enacted: (1) the desired secondary air temperature was established; (2) cooling water flow to the burner was initiated; (3) the gas damper valving upstream of the ESP and baghouse was adjusted to equally distribute flue-gas flow through these particulate collection assemblies for the advent of full boiler load; (4) the primary air blower was energized and the 8-inch butterfly valve was opened; and (5) the combustion air flow was set at a rate corresponding to 8-10 percent excess oxygen. At this point, the system was ready for SRC Fuel and all that remained was to initiate the vibrator motor on the 400-cubic foot bin and depress the "start" button at the boiler front. This action caused the slide valve downstream of the feedscrew to open and the feedscrew motor to energize. The variable feedscrew motor control was adjusted to produce an SRC Fuel flow of ~440 lb/hr. Primary and secondary air flows were then adjusted as were the air register louvers to attain stable combustion. Gradually, the process of lowering natural gas flow and increasing the pulverized SRC Fuel flow, while adjusting the air flows to maintain stable combustion, was continued until the support flame was extinguished. If the extinguishing of the natural gas support flame was successful, the boiler would be operating at approximately half load. Fuel flow was then increased by increasing the speed of the screw feeder and air flows were continually adjusted until full load was reached.

Generally, test conditions were achieved by 0800 to 0900 hours and the first four-hour steady-state test was performed. Upon its completion, a one-hour period was required, during parametric testing, to change boiler operating parameters in readiness for the second four-hour steady-state test. Testing for the day usually concluded upon completion of the second steady-state test between the hours of 1700 and 1800. A one-hour-and-forty-five-minute isokinetic and an ESP parametric test were performed during each four-hour steady-state period along with fuel sample collection for chemical analysis.

Combustion test procedures during steady-state duration testing were exactly the same as those utilized during the parametric test period. The lone exception was the fact that no time was required in between four-hour steady-state duration tests to change boiler operating parameters as was necessary during parametric testing.

5. Combustion Test Synopsis

a. Shakedown Tests

October 18, 1982, Monday - Run 1018SD

This was the first of several trial burns that were made prior to the scheduled shakedown tests for SRC Fuel in the 700 hp boiler. Independent SRC Fuel combustion was attained several times during this day's test period. Initial problems encountered were the inability to move the flame ignition point off of the burner tip and the clinker buildup which resulted. However, these tests were conducted primarily to evaluate the fuel feed system and not to observe the operational characteristics of the burner. The burner used on this day was the "Econo" burner. This burner had a straight 6-inch throat for higher primary air/SRC Fuel velocities at the burner exit and was made as a back-up to the slow mix burner. It was used in conjunction with a 30° co-current diffuser. This co-current diffuser imparted a swirl to the primary air that was identical in direction to that which was imparted to the secondary air. During the day's operations, it was discovered that a small amount of natural gas assistance to the SRC Fuel flame greatly aided in moving the flame off of the burner tip.

October 19, 1982, Tuesday - Run 1019SD

The "Econo" burner was removed and replaced with the original slow mix burner and the 30° co-current diffuser. Little time was available to observe the operational characteristics of the slow mix burner, as a great deal of effort was directed towards establishing an acceptable fuel feed flow. Although independent SRC Fuel combustion was established, problems were again encountered with fouling of the burner tip and flame impingement on the boiler floor. Additional efforts on this day were the placement of 30° co-current diffuser from its original 4 inches back from the end of the guide tube position to 11-1/2 inches back from the end of the guide tube. This had no appreciable effect on the moderate flame impingement that was occurring.

October 20, 1982, Wednesday - Run 1020SD

Testing on this day was devoted to shakedown operation of the slow mix burner. Much of the time was used to determine the optimum position for the 30° co-current swirl diffuser in the primary air/SRC Fuel delivery tube within the burner. Problems were experienced with fuel flow fluctuations due to the non-uniform delivery of fuel from the 5-inch screw feeder. Despite these problems, one isokinetic test was performed during the afternoon as the boiler was fired on SRC Fuel without natural gas support. The moving of the primary air co-current diffuser back to approximately 21 inches from the end of the guide tube resulted in slightly alleviating the flame impingement problem. Additional efforts on this day were the lowering of the boiler load to a point where an optimum flame length for the boiler was established.

October 21, 1982, Thursday - Run 1021SD

The boiler was operated on this day with natural gas support because a stable flame could not be obtained with SRC Fuel alone. Wheelabrator-Frye conducted mass train sampling and ESP parametric testing at both full and 2/3 load conditions. Operation at 2/3 load was performed to determine the effect on carbon burnout. Results indicated little effect on carbon burnout; therefore, this approach did not warrant further pursuit.

October 22 and 23, 1982, Friday and Saturday

Formal testing was not conducted during this period. This time was used to make modifications to the fuel-feed and burner systems in an effort to improve combustion. Modifications included: removal of the existing 6-inch primary air line and the installation of a new 6-inch flex hose line without the 90° elbows; and construction of an adjustable water-cooled cone that was inserted in the slow mix burner. The cone was intended to act as a radiation shield at the exit of the burner. One shakedown test was performed with the new water-cooled cone. Results were not encouraging as combustion was unstable. The cone was removed and no further testing was performed. (The idea to use the water-cooled cone was the result of previous experience in burning SRC Fuel at PETC. Although this particular design failed, later refinements resulted in the successful tests with the fast mix burner in January 1983.) Due to the limited time available for testing, a decision was made to begin the parametric tests. The best available burner at this time was the slow mix burner; therefore, it was decided that this burner would be used in conjunction with the 30° co-current diffuser for the start of parametric testing after an initial attempt to perform testing with a 45° co-current diffuser resulted in poor flame stability.

b. Parametric Tests

October 24, 1982, Sunday - Run 1024SD

Two, four-hour combustion tests were conducted on the first day of parametric testing. During the first portion of testing (1024-1), conditions were set at a 530°F secondary air temperature and a flue-gas oxygen level of 5.4 percent (32.0 percent excess air). The length of the flame was approximately 80 percent of that of the firebox with no severe impingement occurring. During the second portion of testing (1024-2), conditions were established at a flue-gas oxygen level of 3.2 percent (16.5 percent excess air) and a secondary air temperature of 615°F. CO levels averaged 200 ppm with occasional spikes up to 400 ppm.

Boiler operation was much more unstable during the second test as the flame was observed to be impinging on the left wall in the rear of the firebox.

October 25, 1982, Monday - Run 1025SD

Two additional parametric tests were performed with a secondary air preheat temperature of approximately 500°F. The first portion of testing (1025-1) was performed at a flue-gas oxygen level of 5.1 percent (29.4 percent excess air). During the course of this test the steam flow oscillated severely due to oscillating pressures within the 400-cubic foot SRC Fuel storage bin. The indirect cause of these static pressure oscillations was a plugged fuel line in the Petrocarb fuel system. These steam flow fluctuations were not evident during the second portion of testing (1025-2) after the plugging problem had been remedied. Flue-gas oxygen levels were set at 3.0 percent (14.5 percent excess air) for this test. Some clinker formation was noted but the burner would clear itself to the extent that testing was not interrupted.

c. Duration Tests

October 26, 1982, Tuesday - Run 1026SS

Steady-state duration tests for SRC Fuel began on this day. One combustion test was performed at a secondary air temperature of 600°F and a minimum excess air level of 15 percent (approximately 3 percent flue-gas oxygen). Electrical short circuits in the ESP prevented WFI from performing ESP parametric tests; however, an isokinetic test was conducted to determine carbon conversion efficiency. Clinker formations on the burner were observed throughout the test causing very high CO levels (~700 ppm). Efforts to remove the clinker by various burner and louver adjustments were relatively unsuccessful. Fuel feed problems were still encountered with the 5-inch screw feeder system.

October 27, 1982, Wednesday

No testing was performed in order to make modifications to the fuel feed system. The 5-inch feedscrew at the bottom of the SRC Fuel feed bin was removed and a new 6-inch feedscrew was installed in its place. In addition an 8-foot long flanged section of the primary air/SRC Fuel line was removed and two spool test sections were installed back-to-back to evaluate fuel deposition on the inside of these pipes. The two spool test pieces consisted of one 4-foot long section of 6-inch I.D. stainless steel pipe and one 4-foot long section of a 4-inch schedule 40 carbon steel pipe.

October 28, 1982, Thursday

A shakedown run with the new 6-inch screw feeder was unsuccessful. Flame stability was very poor and an independent SRC Fuel flame was never established. Since the modifications to the fuel feed system did not improve the test performance, the decision was made to replace the spool test sections with the original pipe section and to replace the 6-inch feedscrew with the former 5-inch feedscrew.

October 29, 1982, Friday - Run 1029SS

Steady-state duration testing resumed on this day, utilizing a secondary air preheat temperature of 600°F. After a long period of adjustment, fairly stable combustion conditions were established. A flue-gas oxygen level of 2.7 percent (12.8 percent excess air) was set for the first portion of testing (1029-1). Clinker buildup on the burner during this part of the test, in conjunction with the low excess O_2 levels in the flue-gas, caused severe swinging of the opacity, CO, O_2, and NO_x emission levels. These fluctuating emission levels also did not facilitate favorable parametric evaluation of the mobile ESP. During the second portion of testing (1029-2), the excess air level was increased from ~13 to ~25 percent, raising the flue-gas oxygen level from 2.7 to 4.4 percent. This was done in an effort to minimize the fluctuations in opacity, CO, O_2, and NO_x emission levels. Consequently, boiler operating conditions became significantly more stable during this part of the test, with CO and opacity levels averaging ~83 ppm and ~17 percent, respectively. In addition, one isokinetic test was performed during this period. Consequently, boiler operations became significantly more stable during this part of the test, with CO and opacity emission levels averaging ~83 ppm and ~17 percent, respectively. One isokinetic test was performed during this last portion of testing.

November 1, 1982, Monday - Run 1101SS

Testing, on this day, was continued at a secondary air temperature of 600°F. During the first portion of testing (1101-1), flue-gas oxygen levels averaged 4.4 percent (24.2 percent excess air). Plugging of the Petrocarb fuel feed system occurred during this test, causing a disruption of SRC Fuel flow to the 400-cubic foot storage bin and a slight decrease in the bin static pressure. This decrease in the static pressure within the 400-cubic foot bin subsequently caused the fuel flow, and as a result, the boiler steam flow to decrease slightly. The feed line was cleaned and boiler operating conditions were set to achieve a flue-gas oxygen level of 5 percent (28.6 percent excess air) for the second portion of testing (1101-2). This second test was performed under stable combustion conditions, although plugging problems still existed within the Petrocarb system. Additional testing was subsequently performed to evaluate the effects of increased primary air on combustion and flame appearance. The addition of an increased amount of primary air proved to have little effect, as attempts to obtain a better shaped flame and stable combustion were relatively unsuccessful.

November 2, 1982, Tuesday - Run 1102SS

Several attempts to attain test conditions were unsuccessful. Upon inspection, the 3/4-inch transport line from the Petrocarb feed system was found to be severely restricted, due to a plug of hardened SRC Fuel. Testing for the day was aborted while system repairs were made.

November 3, 1982, Wednesday - Run 1103SS

Plugging problems still existed within the Petrocarb feed system, causing a delay in combustion testing. After isolating the Petrocarb system and installing separate pressure regulations to the bin and feed screw hopper, an independent SRC Fuel flame was established and test conditions were attained. Only one test (1103-1) was conducted for ~1-1/2 hours at a flue-gas oxygen level of ~5 percent (29.7 percent excess air). During this test, the flame was observed to be long and impinging in the lower left hand corner of the firebox.

November 4, 1982, Thursday - Run 1104SS

During the night prior to this test, a back-pressure regulating valve was installed on top of the SRC Fuel bin to maintain a pressure of 32 inches W. G. within the bin. After establishing an independent SRC Fuel flame, one test (1104) was conducted at a flue-gas oxygen level of 5.4 percent (38.1 percent excess air) and a secondary air temperature near 500°F. Successful testing was accomplished at an opacity level oscillating between 10 and 18 percent without the Petrocarb system in operation. During this test, isokinetic testing was also performed in conjunction with ESP evaluations. When the Petrocarb system was activated to refill the bin after testing, boiler operation became very unstable. However, normal operations were maintained when the Petrocarb system was adjusted to feed at the same rate as the boiler was consuming fuel.

November 5-7, 1982, Friday, Saturday, Sunday

No formal testing was conducted on Friday, November 5. Discussion was held concerning methods of improving the fuel transport system performance. Several ideas were considered and implementation was begun over the weekend. One of these ideas was the staging of two primary air blowers to increase the primary air flow.

November 8-11, 1982, Monday, Tuesday, Wednesday, Thursday

No testing other than system shakedown runs was conducted during this period. This entire week was devoted to solving the problems in the SRC Fuel delivery system and the SRC Fuel burner. During the week the following modifications were enacted and tested:

(1) A second primary air blower was connected in series with the original blower increasing the primary air flow capacity by approximately 75 percent.

(2) The opening in the SRC Fuel bin bottom was enlarged from 10 to 12 inches to increase the SRC Fuel flow and a 12-inch knife gate valve was installed to isolate the bin from the rest of the fuel feed system.

(3) The amplitude of the bin vibration was increased by 40 percent, having no effect.

(4) A nitrogen purge was provided beneath the vibrating baffle. This had no effect.

(5) The SRC Fuel particle size was increased to approximately 70 percent minus 200 mesh. This seemed to improve the stability of the fuel flow from the feedscrew.

(6) The crushed SRC Fuel was wetted with approximately 0.5 to 1.5 weight percent water. This had no effect.

All of the above changes were made in an attempt to improve the fuel handling system. The result was improved fuel feed; however, the burner performance was still not improved. Consequently, the straight 6-inch "Econo" burner, with a tangential inlet elbow, was reinstalled in place of the diverging nozzle slow mix burner. This resulted in slightly more stable combustion and fewer fouling problems. In addition, this burner exhibited a wide range of adjustment to the combustion parameters gun position and secondary air swirl.

The final modification was the installation of a reverse spin 30° diffuser. This greatly improved combustion stability and reduced burner fouling. At this point, a decision was made to continue testing with the above configuration.

November 12, 1982, Friday - Run 1112SS

Duration testing continued with the "Econo" burner using SRC Fuel pulverized to 90 percent minus 200 mesh. Two tests were run at high flue-gas oxygen levels. The first portion of testing (1112-1) was performed at a flue-gas oxygen level of 5.4 percent (31.8 percent excess air) and a secondary air temperature of 589°F. The second portion of testing was conducted at a flue-gas oxygen level of 5.2 percent (29.8 percent excess air) with a 574°F secondary air temperature. Both tests required natural gas support at a thermal input of 5 percent of the total. A primary air flow corresponding to a primary to total air ratio of 18 percent was found to provide better combustion conditions than lower primary to total air ratios.

November 15, 1982, Monday - Run 1115SS

Additional duration testing was conducted with the "Econo" burner, the 30° reverse diffuser, and the SRC Fuel pulverized to a particle size consisting of 90 percent minus 200 mesh. This was the case for the remainder of the week. The first portion of testing (1115-1) was run with a secondary air temperature of 592°F and a flue-gas oxygen level of 5.4 percent (32.1 percent excess air). Very stable combustion was obtained with natural gas support. The second portion of testing (1115-2) was performed at a 6.5 percent (42.4 percent excess air) flue-gas oxygen level and a 592°F secondary air temperature with no natural gas support. Isokinetic testing was performed during each formal test period. Clinkers formed on the burner and were dislodged several times during both test series.

November 16, 1982, Tuesday - Run 1116SS

Testing was conducted on this day with secondary air preheat temperatures near 575°F. The first portion of testing (1116-1) was performed at a flue-gas oxygen level of 6 percent without natural gas support. Opacity and CO levels averaged 17 percent and 40 ppm, respectively. Combustion was very good with the flame in a cone shape at the burner and concentrically centered in the furnace. The second portion of testing was also conducted at a flue-gas oxygen level of 6 percent. Initially, boiler conditions appeared to be stable, but midway into the test, these conditions degraded, necessitating natural gas support. Isokinetic testing was aborted at this point; however, a 7 percent natural gas thermal input was required to complete ESP testing.

November 17, 1982, Wednesday - Run 1117SS

Both portions of this test (1117-1 and 1117-2) were conducted at a 6 percent (~39 percent excess air) flue-gas oxygen level with secondary air temperatures near 575°F. This was the highest secondary air preheat temperature attainable at this high excess air level. Natural gas assistance was used for both tests providing 5 percent of the total thermal input. Opacity and CO levels were steady during both test periods, averaging 15 percent and 50 ppm, respectively.

November 18, 1982, Thursday - Run 1118SS

The first portion of testing (1118-1) was conducted at a 5.8 percent (36.1 percent excess air) flue-gas oxygen level and a 588°F secondary air temperature. CO and opacity levels averaged 40 ppm and 14 percent, respectively, throughout this test. During the second portion of testing (1118-2), the flue-gas oxygen level averaged 6 percent (37.6 percent excess air) with a 562°F secondary air temperature. An increase in fuel flow, and, as a result, steam flow, was experienced during this run due to an increase in the 400-cubic foot bin pressure. Because of this, a third period of testing (1118-3) was performed at the same conditions. Problems with clinker formation on the burner were experienced throughout the entire day. NO_x levels were excessively high although CO levels were normal. Natural gas was used to provide a 7 percent thermal load support during all of the day's testing.

November 19, 1982, Friday - Run 1119SS

The SRC Fuel combustion phase of the SRC fuels test program was concluded with three test runs (1119-1, 1119-2, and 1119-3). Natural gas support was used for all three tests. Test conditions were set at a flue-gas oxygen level of 6 percent (~38 percent excess air) with secondary air temperatures near 590°F. Clinker formation was experienced throughout the testing period; however, no serious complications developed.

Cumulative ash deposits removed from the 700 hp boiler firebox after SRC Fuel testing with the slow mix and "Econo" burner were of a negligible amount.

d. PETC Fast Mix Burner Tests

January 25, 1983, Tuesday - Run 0125SD

Shakedown testing of the new 5-inch water-cooled burner, without the cone, was initiated on this day with Run No. 0125SD. SRC Fuel/natural gas combustion was established and initial attempts at extinguishing the natural gas support flame were unsuccessful as combustion became unstable and the boiler experienced a flameout. After installing the cone at the designed position which would produce a 125 ft/s fuel velocity at the nozzle tip, SRC Fuel/natural gas combustion was again established. This position placed the cone 3/4 inch past the burner tip and produced a cone shaped flame at an SAZ-20 louver setting of 4.5. After extinguishing the natural gas support flame and closing the louvers down to a 2.0 setting, the flame came back against the cone and clinker formation on the cone became evident. Consequently, the boiler was shut down for the day and the burner removed and cleaned.

January 26, 1983, Wednesday - Run 0126SD

Shakedown testing continued on this day, Run No. 0126SD. Initial efforts were thwarted by clinker formation on the burner following the extinguishing of the natural gas support flame. The boiler was subsequently shut down to clean the clinker from the deflector cone. Shortly thereafter, the boiler was once again shut down to repair a leaking burner packing gland which had become a recurring problem on this day. At this time the cone was adjusted so that it was protruding 3/8 inch from the tip of the burner. SRC Fuel combustion was again initiated, but the inability to keep the flame from igniting at the cone led to the installation of the reverse diffuser. With the reverse diffuser positioned 18 inches from the inner cone front surface, several boiler flameouts occurred. In addition, moderate impingement was noted in the right upper corner of the boiler, when viewing the flame from the rear. A series of burner, cone, and louver positions were investigated in an attempt to attain stable combustion but to no avail. Due to these difficulties, it was decided to end testing for the day and check another diffuser position on the following day.

January 27, 1983, Thursday - Run 0127SS

The 30° reverse diffuser was mounted 2 inches from the front end of the deflector (cone end) for testing on this day. Clinker formations hampered the initial phases of testing. After extensive adjustments did not improve combustion performance, the 30° reverse diffuser was replaced with a 30° co-current diffuser. Consequently, an immediate improvement was noticed. One combustion test (0127-1), with an accompanying isokinetic test, was completed at a secondary air preheat temperature of 500°F and a 5 percent (28.8 percent excess air) excess oxygen level in the flue gas. Throughout testing, large fluctuations in steam flow were experienced due to fluctuations in the fuel flow. These fluctuations in fuel flow were believed to be caused by a malfunctioning vibrator on the SRC

Fuel feed bin. Prior to the initiation of this combustion test, the 30° co-current diffuser was set at a position 9 inches back from the deflector cone.

January 28, 1983, Friday - Run 0128SS

Testing was initially delayed so that the primary air blower motor could be changed due to a noisy bearing at the fan side. When testing was begun on this Friday afternoon, efforts were concentrated on determining the best position for the co-current diffuser. Reasonably good data had been obtained on January 27, 1983, with the 5-inch burner and the diffuser set 9 inches back from the deflector cone. Boiler tests to determine high and low oxygen levels with the co-current diffuser 12 inches and 6 inches back from the deflector cone were conducted on this day.

With the co-current diffuser set at 12 inches back from the deflector cone, excellent combustion was attained at the 5 percent (~29 percent excess air) oxygen level. The ability to shape the flame by moving the SAZ-20 louvers from the No. 3 to the No. 6 louver setting, while adjusting the inner cone deflector, was very effective. The flame appearance was short and bright and rotating in a tight ball at the 5 percent O_2 level; however, it became smoky as the O_2 level was lowered. As the secondary air temperature was reduced to 300°F, CO levels remained relatively stable at 70 ppm with O_2 levels at 3 to 4 percent. However, as the temperature was lowered below 300°F, the firebox became smoky and the boiler experienced a flameout due to the Fireye losing sight of the flame.

The boiler was brought back up with the diffuser placed at a position 6 inches back from the deflector cone. At 5 percent excess O_2, the flame was very bright; however, it was broader and fuller in appearance when compared to the flame achieved with the diffuser set at a position 12 inches back from the cone. A clinker formed at this condition and by adjusting the deflector cone inward, the clinker was eliminated. Shortly thereafter the boiler was shut down after all of the required data was obtained.

January 31, 1983, Monday - Run 0131SS

Testing was continued with the 5-inch burner and the 30° co-current diffuser. The first portion of testing (0131-1) was conducted with a 594°F secondary air temperature and a 3.4 percent (17.5 percent excess air) oxygen level in the flue-gas. CO levels averaged ~50 ppm. Initially, boiler operation was hampered by unstable combustion. After completion of the first isokinetic test, a shutdown occurred due to total consumption of fuel in the storage bin. More fuel was added to the SRC Fuel feed bin and the boiler restarted. The second portion of testing (0131-2) was performed with a flue gas oxygen level of 5.5 percent (33.8 percent excess air) and a 575°F secondary air temperature. Much difficulty was experienced during this test due to unstable combustion. Fuel flow problems caused steam load fluctuations and a boiler shutdown. After the test, it was discovered that the ring in front of the shroud was warped due to excessive heat absorption. The purpose of this ring was to prevent air from getting behind the gas ring. Because it was warped it prevented the flame from forming a ball. Due to the unstable conditions, the validity of this test was highly questionable.

February 1, 1983, Tuesday - Run 0201SS

Only one test, 0201-1, was performed on this day. Conditions were set at a flue-gas oxygen level of 2.7 percent (12.9 percent excess air) with a 600°F secondary air temperature. The start of the test was delayed due to a faulty steam transmitter which had to be replaced. Fuel flow problems were encountered throughout the test and one computer crash occurred. The flame was observed to be in a tight ball and very bright, almost yellow-white in appearance. CO levels and NO_x levels were ~45 ppm and ~890 ppm, respectively. The rest of the day was devoted to establishing a procedure to deliver fuel from the Petrocarb system to the 400-cubic foot bin while operating the boiler.

February 2, 1983, Wednesday - Run 0202SS

PETC fast mix burner tests were concluded on this date. The first part of the test (0202-1) was conducted at a flue-gas oxygen level of 4.2 percent (23.6 percent excess air) with a 600°F secondary air temperature. After completion of the isokinetic test, the coolant to the gun was turned off to observe the effect of clinker formation. After 20 minutes, a certain amount of clinker buildup was noted; however this blew off rapidly. The second part of the test was run with a 500°F secondary air temperature and a 3.4 percent (17.9 percent excess air) oxygen level in the flue gas. CO levels and NO_x levels were ~55 ppm and 925 ppm, respectively.

During this test period, SRC Fuel was transferred from the Petrocarb system while the boiler was operating with a minimum amount of instabilities.

Cumulative ash deposits within the 700 hp boiler firebox were again negligible ($<$ 1 pound). The deposits that existed were in the form of a black powder and could be brushed away very readily. In certain locations, along the flame path and at the entrance to the convection section, the deposits had become crusty.

6. Combustion Test Results and Discussion

Four parametric tests were performed with SRC Fuel from October 24-25, 1982. Table 7 gives the fuel analysis for each of the four parametric tests. Moisture content was very similar for these tests at ~0.38 percent. Nitrogen content ranged from 1.94 to 1.98 percent. Sulfur content ranged from 0.82 to 0.93 percent.

Table 8 gives the boiler operating conditions and boiler performance during SRC Fuel parametric tests. All tests were conducted at full load boiler conditions. Three tests (1024-1, 1025-1, and 1025-2) were conducted with secondary air temperatures near 500°F. One test (1024-2) was conducted with a 600°F secondary air temperature. Flue-gas oxygen levels were either ~3 percent or ~5 percent. Excess air levels ranged from 14.5 to 32.0 percent. Average flue-gas temperatures varied from 526°F to 606°F. Carbon conversion efficiencies varied from 97.8 to 98.8 percent. Boiler efficiencies were in the range of 81.5 to 83.7 percent. Additional parametric testing indicated that an excess O_2 level of ~5.0 percent was necessary so that non-fluctuating dust loadings could be sent to the ESP and facilitate its favorable evaluation. Consequently, this 5.0 percent excess O_2 level was chosen to perform the duration combustion tests in conjunction with a 600°F secondary air preheat. This level of preheat was chosen as it is representative of that which is available in the utility industry.

Table 9 gives the flue-gas analysis and particulate emissions during the SRC Fuel parametric tests. Measured SO_2 emissions were in the range of 1.23 to 1.29 lb/MBtu. These values were higher (approximately 7-24 percent higher) than those calculated from the fuel analysis. These discrepancies were due mainly to error in the fuel analysis and drifting of the SO_2 meter. NO_x emissions were in the range of 0.56 to 0.80 lb/MBtu. Particulate emissions were in the range of 1.07 to 1.26 lb/MBtu.

Table 10 gives the fuel analysis for SRC Fuel steady-state duration tests. Eighteen steady-state duration tests were performed from October 26 to November 19, 1982. The moisture content of the fuel ranged from 0.42 to 0.67 percent, with the higher heating value of the fuel ranging from 15,766 to 15,950 Btu/lb.

Table 11 shows the boiler operating conditions and boiler performance during SRC Fuel steady-state duration tests. The boiler was operated at full load conditions with flue-gas oxygen levels generally ranging from 4.4 to 6.5 percent. Secondary air temperatures were set between 500°F and 600°F. Carbon conversion efficiencies were in a range from 97.7 to 98.9 percent. Boiler efficiencies varied from 81.1 to 83.2 percent.

Table 12 gives the flue-gas analysis and particulate emissions for the eighteen steady-state duration tests with SRC Fuel. SO_2 and NO_x levels ranged from 1.17 to 1.39 lb/MBtu and 0.63 to 1.45 lb/MBtu, respectively. Uncontrolled particulate emissions varied from 0.72 to 1.25 lb/MBtu.

Table 25 gives the fuel analysis for the PETC fast mix burner tests. Six tests were conducted from January 27 to February 2, 1982. The moisture content of the fuel ranged from 0.28 to 0.43 percent. The higher heating value of the fuel varied from 15,820 and 15,911 Btu/lb.

Table 26 shows the boiler operating conditions and boiler performance during PETC fast mix burner tests. The boiler was operated at full load conditions. Flue-gas oxygen levels were varied from 2.7 to 5.5 percent. Secondary air was preheated to either near 500°F or near 600°F. Average flue-gas temperatures were between 482°F and 509°F. Carbon conversion efficiencies ranged between 98.6 and 99.3 percent. Boiler efficiencies were in a range from 83.7 to 85.6 percent.

Table 27 gives the flue-gas analysis and particulate emissions for the six PETC fast mix burner tests. SO_2 and NO_x levels ranged from 0.98 to 1.14 lb/MBtu and 1.17 to 1.37 lb/MBtu, respectively. Uncontrolled particulate emissions varied from 0.44 to 0.87 lb/MBtu.

C. SRC Residual Fuel Oil Tests

1. Combustion Test Plan

SRC Residual Fuel Oil tests were conducted over a two-week period from December 7 to December 16, 1982. Four parametric tests were conducted on December 8 and December 9, and two additional tests were completed on December 15 and December 16. Testing was conducted at two secondary air preheat temperatures (~500°F and ~600°F) while excess air levels were varied.

Steady-state duration tests were conducted during the week of December 10 to December 17. Operating conditions for these duration tests were selected based upon parametric test results. Eleven steady-state duration tests were performed at a flue-gas oxygen level of ~2.5 percent with secondary air preheated to ~600°F.

2. Combustion Test Facility

The fuel storage and transport system was specifically designed for the SRC Residual Fuel Oil testing phase, design criteria being based on the physical properties of this particular fuel.

A 2500-gallon storage tank, (See Flow Diagram in Figure 4.C) located inside a containment wall, was installed on the south side of Building 93. External steam coils maintained the SRC Residual Fuel Oil in the tank at 200°F. The tank was sealed and inerted with a nitrogen blanket maintained at 1.0-1.5 psig. A rupture disc set at 2.5 psig provided over-pressure protection. Any vapors vented from the tank passed through a recycle condenser and a charcoal filter to remove the vapors from the vent gas. A view of the Residual Fuel Oil Tank and fuel heater can be seen in Figure 17.

An AC frequency controlled variable speed motor driving a DeLaval positive displacement pump fitted with Kalrex seals (Figure 18) was used to pump and control the fuel flow. This flow was measured using a Micro Motion flow meter (Figure 19). A Crane-Deming (positive displacement) recirculation pump was installed upstream of the DeLaval fuel pump to recirculate SRC Residual Fuel Oil fuel back to the hold tank. Two Brown Fin Tube steam heaters connected in series were used to heat the fuel to approximately 325°F. The fuel then was either recirculated or fed directly to the boiler. The positions of the recirculation valve and fuel stop valve were interlocked with the boiler flame monitoring system. One-hundred-seventy-five psig steam was available to atomize the SRC Residual Fuel Oil. The existing natural gas system was used to "light off" and warm up the boiler prior to a SRC Residual Fuel Oil test.

3. Burner Nozzle Selection

The slow mix burner (Figure 11.B) was utilized for the two-week SRC Residual Fuel Oil test series. This burner configuration was the same as that which was used during No. 6 fuel oil testing and is described in Section V.A.3. The Coen burner cap with eight 5/32-inch nozzle holes, each fitted with tungsten carbide inserts and having a 75° spray angle, was utilized. Modifications required of the burner assembly included increasing the center hole of the nozzle body from 1/2 inch to 11/16 inch to reduce the pressure drop caused by the increased amount of atomizing steam needed for good atomization. A center rod was also placed in the nozzle body and cap to reduce carbon buildup. In addition, a co-current diffuser (one that imparted a swirl to the primary air, in the same direction as that of the secondary air swirl) was utilized for the entire SRC Residual Fuel Oil test period. This same co-current diffuser was used during No. 6 fuel oil testing. Steam, available at a maximum pressure of 175 psig, was used to atomize the viscous SRC Residual Fuel Oil.

4. Combustion Test Operations

The SRC Residual Fuel Oil was approximately 50 percent SRC Fuel dissolved in SRC Fuel process solvent. This fuel had a flash point over 300°F, a pour point of 120°F, a boiling point over 450°F, and could be atomized in the 300°F temperature range. The SRC Residual Fuel Oil was prepared by Catalytic, Inc. at Wilsonville, Alabama and shipped to PETC in six insulated 6000-gallon tank trucks. All six tank trucks were then parked for several weeks remote from the combustion test facility. Low pressure steam was connected to an internal steam coil in each tank truck to maintain the fuel at a temperature of 160°F. A nitrogen blanket was kept on the trucks at all times.

When SRC Residual Fuel Oil was required to fill the 2500-gallon hold tank, a tank truck was moved to a position for connection to the heat traced hold tank supply piping. To initiate SRC Residual Fuel Oil fuel transfer, the tanker was pressurized with nitrogen to 15 psig, forcing the fuel to flow into the 2500-gallon hold tank.

The temperature of the SRC Residual Fuel Oil in the hold tank was maintained at a minimum 180°F by steam platecoils mounted on its outer walls. This temperature was the minimum required for pumping. The fuel delivery system was capable of delivering to the boiler 200 gallons per hour of SRC Residual Fuel Oil at 325°F and 100 psig.

Two separate phases of SRC Residual Fuel Oil testing were conducted during a two-week period in December 1982.

Parametric testing with SRC Residual Fuel Oil was performed during the week of December 6, 1982 - December 10, 1982. After formal testing each day the boiler was operated on natural gas at a steam load of 10,000 lb/hr with a major portion of the flue-gas flow being diverted through the ESP. This enabled the maintenance of the necessary 300°F temperature at the ESP exit. Nighttime boiler operation during the duration testing period from December 13, 1983 - December 17, 1983 utilized this same warmup schedule.

Prior to beginning SRC Residual Fuel Oil testing during both parametric and duration phases, the fuel was recirculated to the boiler and back to the hold tank. Upon leaving the hold tank, the fuel passed through the fuel heaters and was heated to a temperature of 325°F. The path of the recirculating fuel was controlled by two shutoff valves; one in the recirculation line and the other in the fuel delivery line to the burner. Both valves were interlocked with the boiler flame monitoring system and in the event of a boiler flameout, fuel flow to the burner was shut off and diverted to the 2500-gallon hold tank. Preheat of the combustion air was generally initiated at 0600 hours during both parametric and duration testing periods. During parametric testing, the boiler was operating on natural gas at this time. Therefore, the following had to be verified before initiating an SRC Residual Fuel Oil flame at 0630 hours: (1) in order to maintain a sufficiently cool burner, cooling water to the burner was set to maintain a 15°F differential; (2) a combustion air flow yielding 8-10 percent excess O_2 was verified by the operator while the appropriate speed of the fuel feed pump was set; and (3) atomizing steam pressure at the burner was set at 25 psig. Upon establishing stable SRC Residual Fuel Oil combustion, the natural gas support flame was extinguished. Full boiler load was established by 0700 hours with test conditions being achieved by 0800 hours.

During duration testing, the boiler steam load was increased from 10,000 lb/hr at 0630 hours to obtain full load operation by 0700 hours. Test conditions were then achieved by 0800 hours. Generally two, four-hour combustion tests were conducted during both parametric and duration test days. Isokinetic testing, performance evaluation tests of the mobile ESP, and fuel sampling for chemical analysis were performed during each four-hour test. Daily testing periods for the parametric tests were usually one to two hours longer than that of the duration tests. This was due to the extra time required to change boiler operating parameters between the four-hour test runs.

5. Combustion Test Synopsis

a. Parametric Tests

December 7, 1982, Tuesday - Run 1207SD

The scheduled tests performed very well with few problems. During the first portion of testing (1207-1), excellent full load operating conditions were achieved with a 3 percent (15.7 percent excess air) flue-gas oxygen level and a 600°F secondary air temperature. The second portion of testing (1207-2), was performed at a low flue-gas oxygen level of 1.7 percent (8.6 percent excess air) while still maintaining an opacity level less than 25 percent. The flame observed during this run had a "ball" shape and was very brilliant. Some light deposits were noted on the burner cap at the end of the test.

December 8, 1982, Wednesday - Run 1208SD

For the first portion of testing (1208-1), test conditions were set at a 3 percent (17.1 percent excess air) flue-gas oxygen level and a 500°F secondary air temperature. The boiler operated well at these settings. The second portion of testing (1208-2), was run at the lowest flue-gas oxygen level (~1.5 percent) while still maintaining an opacity level less than 25 percent. The excess air level for 1208-2 was 7.7 percent. No major problems developed during either portion of the testing.

December 9, 1982, Thursday - Run 1209SD

Both tests during this run were conducted at a flue-gas oxygen level of 4.3 percent (~24 percent excess air). During the first portion of testing (1209-1), the secondary air preheat temperature was held at 500°F, and raised to 600°F for the second testing period (1209-2). Both tests ran well as operating conditions were good. However, data for these tests was not analyzed because of problems with the Data Acquisition System and an error in the Beckman Oxygen Meter. It was also found that the second blower which was installed during the SRC Fuel tests to increase the primary air flow was causing the primary air flow measurement from the Brandt meter to be in error. The high discharge pressure of the blower, due to location upstream of the meter, had the Brandt meter beyond its operation range. The use of this blower was discontinued in the future tests.

b. Duration Tests

December 10, 1982, Friday - Run 1210SS

One test (1210) was performed. The secondary air preheat temperature was 600°F and the flue-gas oxygen level was 2.5 percent (13.3 percent excess air). These conditions were selected for the duration runs. During the test several flameouts occurred as a result of possible clinker formation on the burner tip and subsequent plugging of the nozzle. Later the flame returned to normal indicating the clinker may have burned itself out.

December 13, 1982, Monday - Run 1213SS

Two tests (1213-1 and 1213-2) were run at the steady-state duration conditions. These tests ran well except for a momentary problem with high fuel pressure which was believed to have been caused by a fuel line restriction.

December 14, 1982, Tuesday - Run 1214SS

Test conditions for both parts of the test (1214-1 and 1214-2) were set at the steady-state duration conditions. Minor computer problems were encountered and corrected early in the testing.

December 15, 1982, Wednesday - Run 1215SS

Three tests were planned for this run. However, due to a malfunction of the SO_2 meter only two sets of flue-gas data were taken. For both tests (1215-1 and 1215-2) flue-gas oxygen was held at 2.5 percent and the secondary air temperature at 600°F. A special parametric test was run after completion of the steady-state duration test. During this parametric test, the secondary air temperature was maintained at 600°F while the flue-gas oxygen was reduced as much as possible while maintaining opacity levels less than 25 percent.

December 16, 1982, Thursday - Run 1216SS

Two steady-state duration tests were run. The first portion of testing (1216-1) performed well, except for a momentary rise in fuel pressure caused by an obstruction in the burner. The obstruction gradually disappeared and the fuel pressure returned to normal. The second portion of testing (1216-2) ran extremely well with no significant problems. Two special short duration tests were then performed at a 4.3 percent and a 5.0 percent flue-gas oxygen level to determine the effect of excess oxygen on opacity reduction and particulate emission rate. Opacity levels for both of these tests were nearly the same (between 4 and 5 percent). Isokinetic tests were taken at 4.3 percent excess O_2. No data was taken at the 5.0 percent oxygen level because of a problem with the CO meter and efforts to conserve fuel for the following day's testing.

December 17, 1982, Friday - Run 1217SS

Test conditions for this run were set at normal steady-state duration test values. Two of the three scheduled tests were performed at these conditions (1217-1 and 1217-2). The CO_2 analyzer needed to be replaced twice during testing which caused delays and prevented completion of the third test. Numerous calibrations of the CO analyzer were made to assure reliable data. Flame appearance throughout the testing period was good. One special short duration test was then performed at a 0.5 percent excess oxygen level and a 600^{o}F secondary air temperature. No isokinetic tests were performed for this test.

Throughout the SRC Residual Fuel Oil testing program, minor problems were encountered involving fuel line plugging in the Micro Motion flowmeter and momentary shutdowns of the Data Acquisition computer but overall, all tests were considered very successful with respect to the data quality and the boiler performance obtained.

Prior to initiating the SRC Residual Fuel Oil tests, the walls and floor of the firebox were brushed and thoroughly cleaned. This was done again at the end of the SRC Residual Fuel Oil testing and the ash was saved and weighed. Only 1.5 pounds of ash were found remaining in the firebox at the end of SRC Residual Fuel Oil testing. These deposits were uniform throughout the interior. Performance of the fuel burner during the SRC Residual Fuel Oil tests was excellent despite the moderately higher fuel pressures than those which were encountered during No. 6 fuel oil testing.

6. Combustion Test Results and Discussion

Six parametric tests were performed from December 7 to December 9, 1982. Data from December 9 was not used because of a data acquisition problem. Two additional parametric tests were conducted on December 15 and 16 following completion of the scheduled steady-state duration tests. Table 13 shows the fuel analysis of the SRC Residual Fuel Oil during parametric tests. The SRC Residual Fuel Oil had a higher carbon/hydrogen ratio than did the No. 6 fuel oil (10.79 versus 7.03). The nitrogen content was approximately 1.32 percent except for sample 1208-1 which was 1.23 percent. Sulfur content was in the range of 0.40 to 0.49 percent. The moisture content in the SRC Residual Fuel Oil was generally in the range of 0.18 to 0.36 percent. Higher heating values ranged from 16,678 Btu/lb to 16,817 Btu/lb.

The boiler operating conditions and boiler performance for SRC Residual Fuel Oil are given in Table 14. All tests were conducted at full load conditions. Secondary air temperatures were set at ~600°F for the first four tests and at ~500°F for the last two tests of duration testing. At each secondary air temperature setting, excess air levels were varied. Fuel temperature was set around 300°F which gave the SRC Residual Fuel Oil a viscosity of ~30 cp (~150 ssu). Average flue-gas temperatures during this testing ranged between 485°F and 515°F which is approximately 75°F lower than those of the No. 6 fuel oil tests. For example, in Run 0818-1 (No. 6 oil) the average flue-gas temperature was 570°F and in Run 1207-2 (SRC Residual Fuel Oil) the average flue-gas temperature was 490°F. Both runs were performed at the same operating conditions.

Carbon conversion efficiencies for these parametric tests were 99.6 percent and above. The higher carbon conversion efficiencies were at the higher secondary air temperatures. The boiler efficiencies ranged from 84.3 to 86.2 percent which were almost four percentage points higher than those of the No. 6 oil tests. The higher boiler efficiencies with the SRC Residual Fuel Oil were due to three factors: (1) combustion of SRC Residual Fuel Oil resulted in a lower average flue-gas temperature which lowered the flue-gas heat loss; (2) SRC Residual Fuel Oil had a lower moisture content; and (3) there was a higher carbon/hydrogen ratio in the SRC Residual Fuel Oil.

Table 15 gives the flue-gas analysis and particulate emissions during SRC Residual Fuel Oil parametric tests. Emissions of SO_2 were in the range of 0.59 to 0.71 lb/MBtu. These measured values were much higher (from 16 to 46 percent higher) than values calculated from the fuel analysis. These large discrepancies were due mainly to two factors: (1) the error in the fuel analysis; and (2) drifting of the SO_2 meter. NO_x emissions were in the range of 0.57 to 0.76 lb/MBtu. Uncontrolled particulate emissions varied from 0.09 to 0.24 lb/MBtu.

Table 16 gives the fuel analysis for SRC Residual Fuel Oil during eleven steady-state duration tests.

Table 17 gives the boiler operating conditions and boiler performance during SRC Residual Fuel Oil steady-state duration tests. All tests were performed at full-load conditions. The excess air ranged between 13.0 and 14.6 percent. Secondary air temperatures ranged between 589°F and 601°F and average flue-gas temperatures ranged between 485°F and 525°F. Carbon conversion efficiencies were 99.7 percent or above. Boiler efficiencies varied between 84.5 and 85.6 percent.

Table 18 shows the flue-gas analyses and particulate emissions for SRC Residual Fuel Oil steady-state duration tests. SO_2 and NO_x emissions were generally 0.73 and 0.71 lb/MBtu, respectively. Uncontrolled particulate emissions ranged between 0.093 and 0.196 lb/MBtu.

D. SRC/Water Slurry Tests

1. Combustion Test Plan

SRC/Water Slurry tests were conducted during the two-week period from January 3 to January 16, 1983. Parametric testing was completed during the first week. Six parametric tests were performed between January 3 and January 9. Testing was conducted at various secondary air preheat temperatures ranging from 500°F to 575°F and at flue-gas oxygen levels ranging between 2.0 and 4.0 percent.

Steady-state duration tests were conducted during the second week of testing (January 11 to January 14). Conditions for the steady-state tests were selected based upon parametric test results. Eight steady-state duration tests were performed at a flue-gas oxygen level of ~3.0 percent with secondary air preheated to ~600°F.

2. Combustion Test Facility

Facility modifications necessary to accommodate the combustion of SRC/Water Slurry fuels involved the return of the 700 hp CTF to the former coal-water-mixture firing configuration and integration of the coal-water-mixture fuel preparation system with the SRC Fuel handling system.

SRC Fuel was pulverized to 90 percent minus 200 mesh (70 percent through 325 mesh) in the MikroPul ACM-10 pulverizer and pneumatically transported by the Petrocarb pneumatic coal transport system to the existing 18-ton capacity coal storage bin which was reconnected to the gravimetric feeder. Mixtures were then prepared in the coal-water-mixture fuel preparation area (See Flow Diagram in Figure 4.D). To prepare a mixture of SRC/Water Slurry, a measured amount of water was pumped into the 2000-gallon mix tank, then a measured amount of the dispersant, Lomar-D, (approximately 0.5 percent of the total weight of the final fuel mixture) was dissolved in the water. The mixture was continuously agitated and recirculated while SRC Fuel was dropped into the tank. Approximately 1200 gallons of a 65-67 weight percent mixture were prepared in each batch. The SRC/Water Slurry was transferred by a Sandpiper air-powered diaphragm pump to a 2800-gallon holding tank which was equipped with an agitator motor driving two turbine blades and a Moyno recirculation pump. The SRC/Water Slurry mass flow rate to the boiler was regulated by a variable speed, progressing cavity, 5 hp Moyno pump and was measured by a Micro Motion mass flow meter. The Moyno pump was fitted with a Buna-N elastomer stator and a 0.010-inch undersized chrome-plated rotor.

The combustion air system was composed of preheated primary and secondary air streams. The primary and secondary air preheat system is a combination of ambient temperature air from the forced air blower and the air stream heated by a two-stage air heater. The secondary air preheat system can supply 4500 scfm of heated air, at a maximum air temperature of 600°F.

3. Burner Nozzle Selection

The Coen burner gun modified for coal-water-mixture firing was utilized for the SRC/Water Slurry tests (Figure 11.E). The Coen Model No. 2 mV atomizer was used in conjunction with a nozzle cap containing eight 15/64-inch openings at a 60° spray angle. The atomizer assembly and its dimensions are shown in Figure 9. Compressed air, available at pressures up to 100 psig, was used for atomization.

During the final week of testing, additional nozzle caps were evaluated. A nozzle cap with eight 3/16-inch orifices at a 75° spray angle caused heavy flame impingement on the refractory cone regardless of adjustments to air register louver settings, fuel and air flow rates. Testing with a nozzle cap having eight 3/16-inch openings and a 60° spray angle produced higher atomizing air and slurry pressures at the nozzle with no appreciable difference in flame shape or boiler performance.

4. Combustion Test Operations

SRC/Water Slurry tests were conducted in two separate phases during a two-week period in January, 1983. The first phase, parametric testing, was performed during the week of January 4, 1983 through January 10, 1983. Since performance evaluation of the ESP was not being conducted during the parametric test period, it was not necessary to run the boiler on natural gas for nighttime operations. The second phase of the SRC/Water Slurry test program, steady-state duration testing, was performed between January 11, 1983 and January 14, 1983. Nighttime boiler operation during this period was maintained using natural gas at a boiler steam output of 8,000 lb/hr, one-third of full boiler load. With a major portion of the flue-gas flow being diverted through the ESP, a constant heat flux was maintained through the ESP, facilitating its performance evaluation.

Prior to beginning both parametric and steady-state duration test periods, the SRC/Water Slurry fuel was recirculated continuously to the boiler and back to the hold tank, beginning at 0400 hours. At this time natural gas combustion was initiated for parametric testing and the boiler load brought up to a steam output of ~8000 lb/hr. (In the case of steady-state testing, the boiler was already operating at this maximum natural gas capacity, one-third of full boiler load.) At 0500 hours, the flow of hot air to the boiler was initiated and the temperature was slowly increased to ~500°F by 0600 hours SRC/Water Slurry combustion with a natural gas support flame was initiated at 0700 hours after verifying the following: (1) open the center air control valve to 20 percent of full scale on the center air flow indicating gauge; (2) insert the SRC/Water Slurry burner; (3) maintain combustion air flows to attain 8-10 percent excess oxygen in the flue gas; and (4) set atomizing air pressure at the burner to 20-40 psig.

The boiler load was slowly brought up by increasing the SRC/Water Slurry flow rate to a point where the natural gas support flame could be extinguished. Subsequently, the SRC/Water Slurry flow rate was further increased until full boiler load was obtained. Test conditions were generally established by 0800 hours. Each parametric and steady-state duration test period lasted approximately four hours and two tests were conducted each day. A one-hour period was required between the parametric tests to change the necessary boiler operating parameters in order to meet specified test conditions. Isokinetic testing and fuel sampling were performed during each parametric and steady-state duration test. Performance evaluation testing of the mobile ESP was conducted during the steady-state duration testing.

Upon completion of each day of testing the boiler load was slowly lowered by decreasing the SRC/Water Slurry flow rate to just above the point where natural gas was needed to sustain combustion. The natural gas support flame was then initiated and the SRC/Water Slurry flame extinguished. The SRC/Water Slurry fuel train was then flushed with water to prevent any possible settling out of the SRC Fuel. Nighttime operating conditions were set up as explained at the beginning of this section.

5. Combustion Test Synopsis

a. Shakedown Tests

January 4, 1983, Tuesday - Run No. 0104SH

The first test with SRC/Water Slurry was conducted using the burner nozzle cap utilized during the No. 6 fuel oil tests. This nozzle cap had eight 5/32-inch diameter holes drilled at a 75° spray angle. The fuel mixture for this test was 67.5 percent SRC Fuel (90 percent minus 200 mesh), 32.0 percent water, and 0.5 percent Lomar-D. While firing at half load, excessive fuel pressures at the burner necessitated the change to a burner cap with larger holes (15/64 inch in diameter) to decrease fuel pressures. The reverse spin swirl diffuser in the primary air line was utilized during these tests. Large particles of SRC Fuel in the fuel slurry (~1/4-inch x 0-inch), due to initial pulverization problems, plugged the burner nozzle several times during the first shakedown run and caused boiler flameouts. Consequently, the fuel mixture was recirculated through a basket strainer in the hold tank to remove these large particles, eliminating burner plugging problems.

January 5, 1983, Wednesday - Run No. 0105SH

Shakedown testing on the second day resulted in good operation at flue-gas oxygen levels of 5 percent and 2 percent. When the secondary air preheat was removed, the steam load dropped about 7 percent and the flame impinged on the refractory cone. Later, the flame became increasingly unstable and an orderly shutdown was enacted. The high and low excess oxygen levels were run at a preheated secondary air temperature of 300°F. A clinker formed on the burner tip when the boiler was operated with approximately 3 percent oxygen in the flue gas.

b. Parametric Tests

January 6, 1983, Thursday - Run No. 0106SD

Two tests were scheduled for this run with a 66.1 percent SRC Fuel concentration. During the first portion of testing (0106-1), test conditions were set at a 2.8 percent (13.9 percent excess air) flue-gas oxygen level and a 600°F secondary air temperature. Operation was good despite several minor problems. Throughout the test, clinkers formed on the burner cap each time the electrostatic precipitator was opened and closed and a resultant change in furnace pressure occurred. As the clinker built up, CO levels increased. When the clinker broke away, CO levels returned to normal.

The second portion of testing (0106-2) was run to evaluate the lowest flue-gas oxygen level while still maintaining CO levels less than 400 ppm at a secondary air temperature of 600°F. The lowest flue-gas oxygen level was determined to be approximately 2.5 percent (11.2 percent excess air).

January 7, 1983, Friday - Run No. 0107SD

Two parametric tests were run with a SRC/Water Slurry containing a 66 percent SRC Fuel concentration. In Test I (0107-1) boiler conditions were set for a flue-gas oxygen level of 2.8 percent (14.5 percent excess air) with a secondary air temperature of 500°F. This test performed well although there were problems with occasional clinker formation on the nozzle cap requiring readjustments to bring the oxygen level back to original specifications.

During the second portion of testing (0107-2), the flue-gas oxygen level was lowered as far as possible while still maintaining CO levels below 400 ppm at a secondary air temperature of 500°F. The flue-gas oxygen level was lowered to and remained relatively stable at 2 percent ± 0.2 (9.6 percent excess air) for most of this test.

January 10, 1983, Monday - Run No. 0110SD

Two parametric tests were run at a 4 percent (21.8 percent excess air) flue-gas oxygen level with a SRC/Water Slurry containing 65.5 percent SRC Fuel. The first portion of testing (0110-1) performed well. Except for the flame occasionally impinging on both sides of the watertube walls in the firebox, stable combustion was attained. CO levels for this test averaged approximately 58 ppm with few fluctuations throughout testing. The combustion air temperature was maintained at approximately 500°F.

During the second portion of testing (0110-2), the secondary air temperature was to be raised to 600°F. However, 570°F was the highest achievable secondary air temperature. Overall, this test ran well with stable combustion although some deposits were noted on the nozzle cap when the burner was removed after completion of the tests.

c. Duration Tests

January 11, 1983, Tuesday - Run No. 0111SS

Testing was continued with a flue-gas oxygen level of 3 percent (~15 percent excess air) using a 600°F preheated secondary air temperature. The first portion of testing (0111-1) performed well except for several increases in carbon monoxide (from ~80 ppm to 127 ppm) due to deposits forming on the burner nozzle cap. This phenomenon was confirmed when rapping the burner gun sharply with a hammer to dislodge these deposits resulted in a reduction in CO levels. Excellent performance was noted throughout the second portion of testing (0111-2), as there were no notable problems.

After completing the day's formal testing, two different nozzle caps were evaluated for short periods to determine their effectiveness in producing a flame without sparklers. Use of a 3/16-inch 75° burner cap resulted in heavy flame impingement on the refractory cone, no matter how many adjustments were made. Use of a 3/16-inch, 60° burner cap resulted in a 7 psi increase in atomizing air pressure and a 23 psi increase in slurry fuel pressure at the nozzle. No appreciable difference was noted in the flame shape or boiler performance. Sparklers were still present.

January 12, 1983, Wednesday - Run No. 0112SS

Steady-state duration testing continued at a 3 percent excess oxygen level and a 600°F secondary air temperature. The first portion of testing (0112-1) performed well except for an increase in CO levels (100 ppm versus 60 ppm) on one occasion. Consequently, the boiler was shut down, the nozzle cleaned, and when testing resumed, the CO levels decreased back to 60 ppm. The second portion of testing (0112-2) ran extremely well although the fuel burner nozzle pressure fluctuated periodically.

January 13, 1983, Thursday - Run No. 0113SS

Steady-state duration testing continued with more data being acquired at a 3 percent flue-gas oxygen level and a 600°F secondary air temperature. Excellent performance was obtained during the first portion of testing (0113-1). The second portion of testing (0113-2) performed very well without incident, also.

January 14, 1983, Friday - Run No. 0114SS

This was the final day of duration testing. Testing was continued with a 3 percent flue-gas oxygen level and a 600°F secondary air temperature. In the first portion of testing (0114-1), clinker formations on the burner nozzle caps caused intermittent high levels of carbon monoxide up to ~119 ppm. Clinker formations were more prevalent during the second portion of testing (0114-2), causing CO levels to rise as high as 322 ppm. In both cases it was necessary to rap on the burner tube to remove the clinkers. When the clinkers were removed, the CO levels returned to around 75 ppm. Throughout the day a bright stable flame with a high swirl pattern was present.

Upon completion of steady-state duration tests, measurements made on the nozzle cap orifices revealed a nozzle orifice size increase, due to erosion, of 0.0025 inch for approximately 90 hours of full boiler load service.

The largest firebox deposits were experienced during the SRC/Water Slurry tests. A total of 34 pounds was removed from the firebox, the larger accumulations being located on the floor at the front right and rear left corners. In these areas, the accumulations were 3 inches deep, covering an area with an approximate two-foot radius.

6. Combustion Test Results and Discussion

Six parametric tests were performed with SRC/Water Slurry from December 6 through December 10, 1982. Table 19 gives the fuel analyses for these six SRC/Water Slurry parametric tests. The SRC Fuel concentration ranged from 65.3 to 66.0 percent for these tests. The particle size of the SRC Fuel varied from 87 to 91 percent minus 200 mesh. Nitrogen content of the SRC Fuel in the mixture ranged from 1.77 to 1.93 percent. Sulfur content was around 0.97 percent.

Table 20 gives boiler operating conditions and boiler performance during SRC/Water Slurry parametric tests. All of the tests were conducted at full load conditions with two different secondary air temperatures, ~570°F for the first three tests and ~500°F for the last three tests. For each secondary air temperature, the excess air level was varied from 10 to 20 percent. Average flue-gas temperatures varied slightly from 515°F to 536°F. Carbon conversion efficiencies varied from 98.5 to 98.9 percent. Boiler efficiencies were in the range of 80.2 to 81.6 percent. Both carbon conversion efficiencies and boiler efficiencies did not vary notably with variances in secondary air temperatures or excess air levels. During all SRC/Water Slurry combustion tests, atomizing air use was at the upper limit of its source's capacity. It is felt that a small increase in atomizing air capacity could have greatly aided the development of trends in both carbon conversion and boiler efficiencies as functions of secondary air temperature and excess air levels.

The SRC/Water Slurry fuels had lower boiler efficiencies than the other SRC fuels. This was primarily due to the higher water content in the fuel (~34 percent). However, the boiler efficiency for SRC/Water Slurry combustion was comparable to that obtained when burning No. 6 fuel oil.

Table 21 gives the flue-gas analyses and particulate emissions during the SRC/Water Slurry parametric tests. Measured SO_2 emissions were in the range of 1.38 to 1.47 lb/MBtu. These values are somewhat higher (approximately 1 to 10 percent higher than those calculated from the fuel analysis). These discrepancies are due mainly to error in the fuel analysis and drifting of the SO_2 meter. NO_x emissions were in the range of 0.41 to 0.65 lb/MBtu. This is considerably lower than the NO_x emissions of 1.17 lb/MBtu to 1.37 lb/MBtu experienced during SRC Fuel testing with the fast mix burner. Uncontrolled particulate emissions were in the range of 0.86 to 1.15 lb/MBtu which is considerably more than those during SRC Fuel testing using the fast mix burner (0.44 to 0.87 lb/MBtu). This can be accounted for as the 35 percent ash content in the Lomar-D fuel additive which would yield an additional 0.19 lb/MBtu particulate emission.

Table 22 gives the fuel analysis for SRC/Water Slurry used during steady-state duration tests. SRC Fuel concentrations varied from 66.5 to 66.7 percent.

Table 23 shows the boiler operating conditions and boiler performance during SRC/Water Slurry steady-state duration tests. The boiler was operated at full load with excess air levels ranging between 14.9 and 15.9 percent. Secondary air temperatures were set at approximately 600°F. Carbon conversion efficiencies were all 98.8 percent and above. Boiler efficiencies varied from 81.2 to 82.3 percent.

Table 24 gives the flue-gas analyses for SRC/Water Slurry steady-state duration tests. SO_2 and NO_x levels ranged from 1.18 to 1.47 lb/MBtu and 0.47 to 0.56 lb/MBtu, respectively. Uncontrolled particulate emissions varied from 0.74 to 1.00 lb/MBtu.

E. Combustion Test Data Tables

The following tables present all combustion test data compiled during the SRC Phase II program.

TABLE 1. FUEL ANALYSIS: NO. 6 FUEL OIL PARAMETRIC TESTS *

Test No.	0818-1	0818-2	0818-3	0819-1	0819-2	0820-1	0820-2	0820-3
Ultimate analysis (wt %) on moisture free basis								
Hydrogen	11.88	11.52	11.56	11.85	12.00	12.02	11.18	11.78
Carbon	82.07	82.59	82.15	82.15	82.60	81.69	83.61	82.17
Nitrogen	0.22	0.23	0.23	0.26	0.21	0.21	0.22	0.22
Sulfur	0.63	0.64	0.63	0.65	0.65	0.68	0.66	0.64
Oxygen	5.11	4.94	5.36	5.01	4.45	5.26	4.22	5.09
Ash	0.09	0.08	0.07	0.08	0.09	0.14	0.11	0.10
Moisture (%)	6.5	6.3	5.8	7.8	6.1	6.7	6.3	6.3
Higher Heating Value (Btu/lb)	17,404	17,408	17,437	17,448	17,496	17,520	17,556	17,488
Specific Gravity at 75°F	0.9467							

---

*Ultimate analysis, moisture content, and heating value were determined according to ASTM Section 5 (Petroleum Product Lubricants and Fossil Fuels) standards.

TABLE 2. OPERATING CONDITIONS AND BOILER PERFORMANCE: NO.6 FUEL OIL PARAMETRIC TESTS

Test No.	0818-1	0818-2	0818-3	0819-1	0819-2	0820-1	0820-2	0820-3
Thermal Input (MBtu/hr)	30.20	30.37	30.45	30.28	29.91	29.44	29.03	30.07
Steam Flow (lb/hr)	24,390	23,980	23,690	24,150	23,660	23,750	23,360	23,620
Flue-Gas O_2 (%)	1.7	3.7	5.1	2.4	0.6	2.3	0.7	3.7
Excess Air (%)	8.4	20.9	31.0	12.9	3.1	12.2	3.6	21.4
Secondary Air Flow (lb/hr)	21,790	22,950	23,250	21,840	18,830	22,060	19,410	22,710
Secondary Air Temp. (°F)	605	595	594	610	599	502	510	495
Primary Air Flow (lb/hr)	1,241	2,690	4,446	1,180	1,995	1,321	1,518	2,822
Primary Air Temp. (°F)	65	71	68	68	76	63	70	69
Fuel Flow (lb/hr)	1,561	1,565	1,565	1,560	1,560	1,536	1,524	1,573
Fuel Temp. (°F)	213	211	215	215	213	217	210	215
Fuel Pressure at Burner (psig)	62.0	62.0	62.3	61.7	61.7	61.7	62.3	62.0
Atomizing Steam Flow (lb/hr)	238	237	237	237	236	241	242	239
Burner Position (in)	1	1	1	1	1	1	1	1
Swirl Setting	5-1/2	6	6-1/4	4-1/2	5-1/2	5-1/2	5-1/2	5
Average Flue-Gas Temp. (°F)	570	603	613	532	528	544	555	607
Carbon Conversion Eff. (%)	99.98	99.98	99.99	99.98	99.95	99.98	99.93	99.98
Boiler Efficiency (%) (Heat Loss Method)	82.5	80.7	79.6	82.9	83.5	82.4	82.9	80.0

TABLE 3. FLUE-GAS ANALYSIS AND PARTICULATE EMISSIONS: NO. 6 FUEL OIL PARAMETRIC TESTS

Test No.	0818-1	0818-2	0818-3	0819-1	0819-2	0820-1	0820-2	0820-3
Flue-Gas Analysis								
O_2 (%)	1.7	3.7	5.1	2.4	0.6	2.3	0.7	3.7
CO_2 (%)	14.5	12.8	11.8	13.7	15.4	13.9	15.1	12.6
CO (ppm_v)	36	29	41	23	190	35	76	22
SO_2 (ppm_v)	520	455	--	518	560	501	550	456
(lb/MBtu)	0.90	0.95	--	0.95	0.92	0.90	0.92	0.91
NO_x (ppm_v)	225	241	216	215	215	218	210	213
(lb/MBtu)	0.28	0.34	0.33	0.28	0.25	0.28	0.25	0.30
THC* (ppm_v)	0.8	0.6	0.6	0.7	0.2	0.6	2.0	0.6
Opacity, Uncontrolled (%)	N.A.	N.A.	N.A.	N.A.	N.A	5	6	1
Particulate								
Emissions, Uncontrolled								
(lb/hr)	0.772	0.644	0.600	0.743	0.968	0.656	1.150	0.946
(lb/MBtu)	0.026	0.021	0.020	0.025	0.033	0.022	0.040	0.031
Carbon Content (%)+	27.9	36.8	28.7	29.8	63.7	41.4	72.5	24.9

---

*Total hydrocarbons.

+Loss-on-ignition method.

TABLE 4. FUEL ANALYSIS: NO. 6 FUEL OIL DURATION TESTS*

Test No.	0823-1	0823-2	0824-1	0824-2	0826-1	0826-2	0827-1	0827-2	0830-1
Ultimate analysis (wt %) on moisture free basis									
Hydrogen	12.51	12.49	12.47	10.96	11.38	10.89	10.46	11.51	12.38
Carbon	82.04	81.90	84.70	86.84	80.94	83.35	80.20	83.76	80.42
Nitrogen	0.21	0.22	0.20	0.20	0.20	0.22	0.21	0.19	0.27
Sulfur	0.67	0.67	0.67	0.71	0.65	0.65	0.66	0.68	0.62
Oxygen	4.50	4.64	1.87	1.20	6.69	4.77	8.36	3.81	6.27
Ash	0.07	0.08	0.09	0.09	0.14	0.12	0.11	0.10	[illegible]
Moisture (%)	6.0	6.3	6.3	6.1	6.4	6.3	6.2	6.7	6.6
Higher Heating Value (Btu/lb)	17,421	17,502	17,477	17,433	17,523	17,518	17,506	17,592	17,597

---

*Ultimate analysis, moisture content, and heating value were determined according to ASTM Section 5 (Petroleum Product Lubricants and Fossil Fuels) standards.

TABLE 4. FUEL ANALYSIS: NO. 6 FUEL OIL DURATION TESTS*(continued)

Test No.	0830-2	0831-1	0831-2	0901-1	0901-2	0902-1	0902-2	0903-1	0903-2
Ultimate analysis (wt %) on moisture free basis									
Hydrogen	12.41	11.67	11.62	12.23	13.18	13.17	14.42	13.47	11.58
Carbon	80.59	82.83	84.11	82.64	85.66	85.71	83.60	83.35	85.08
Nitrogen	0.23	0.18	0.17	0.16	0.17	0.17	0.21	0.23	0.16
Sulfur	0.66	0.60	0.54	0.50	0.51	0.50	0.50	0.51	0.51
Oxygen	6.02	4.63	3.43	4.35	0.38	0.35	1.17	2.33	2.32
Ash	0.09	0.09	0.13	0.12	0.10	0.10	0.10	0.11	0.10
Moisture (%)	6.2	3.6	3.7	3.3	3.5	3.1	4.3	3.1	3.0
Higher Heating Value (Btu/lb)	17,461	17,889	18,109	18,127	18,112	18,044	18,168	18,040	18,038

---

*Ultimate analysis, moisture content, and heating value were determined according to ASTM Section 5 (Petroleum Product Lubricants and Fossil Fuels) standards.

TABLE 5. OPERATING CONDITIONS AND BOILER PERFORMANCE: NO. 6 FUEL OIL DURATION TESTS

Test No.	0823-1	0823-2	0824-1	0824-2	0826-1	0826-2	0827-1	0827-2	0830-1
Thermal Input (MBtu/hr)	30.01	29.74	30.57	29.96	30.39	29.24	29.39	29.41	28.89
Steam Flow (lb/hr)	23,860	23,900	24,250	23,940	24,220	24,070	24,120	23,780	23,870
Flue-Gas O_2 (%)	2.4	2.4	2.5	2.4	2.3	2.4	2.4	2.4	2.4
Excess Air (%)	12.5	12.9	12.9	12.9	12.7	13.1	12.9	12.9	12.6
Secondary Air Flow (lb/hr)	19,690	19,460	19,500	19,650	22,380	22,050	22,100	21,970	22,050
Secondary Air Temp. (°F)	509	512	503	498	495	497	497	496	505
Primary Air Flow (lb/hr)	4,569	4,464	4,500	4,176	1,224	982	1,304	1,387	1,048
Primary Air Temp. (°F)	68	68	65	71	63	72	65	71	62
Fuel Flow (lb/hr)	1,590	1,568	1,620	1,590	1,590	1,527	1,530	1,532	1,498
Fuel Temp. (°F)	213	213	216	215	210	203	206	202	208
Fuel Pressure at Burner (psig)	64.0	64.0	63.0	64.0	61.7	61.8	48.7	51.7	52
Atomizing Steam Flow (lb/hr)	258	254	248	250	242	241	189	212	203
Atomizing Steam Pressure at Burner (psig)	75.0	75.0	N.A.	N.A.	72.6	71.3	53.5	59.2	57
Burner Position (in)	1	1	1	1	1	1	1	1	1
Swirl Setting	5	5	5-1/2/3-3/4	5-1/4	5-1/2/3-1/2	5	5	5-1/2	3
Average Flue-Gas Temp. (°F)	563	573	543	554	539	553	535	552	531
Carbon Conversion Eff. (%)	99.98	99.97	99.98	99.99	99.98	99.98	99.97	99.97	99.97
Boiler Efficiency (%) (Heat Loss Method)	81.2	81.0	81.5	82.5	82.8	82.5	82.7	82.2	82.6

TABLE 5. OPERATING CONDITIONS AND BOILER PERFORMANCE: NO. 6 FUEL OIL DURATION TESTS (continued)

Test No.	0830-2	0831-1	0831-2	0901-1	0901-2	0902-1	0902-2	0903-1	0903-2
Thermal Input (MBtu/hr)	28.54	29.36	29.53	29.80	29.60	29.10	29.25	29.04	28.94
Steam Flow (lb/hr)	23,640	23,930	24,340	23,960	24,100	24,070	23,980	24,040	23,750
Flue-Gas O_2 (%)	2.4	2.4	2.5	2.4	2.4	2.5	2.5	2.4	2.4
Excess Air (%)	12.4	13.2	13.5	12.6	12.4	12.8	12.5	12.1	12.7
Secondary Air Flow (lb/hr)	21,750	22,240	22,350	22,130	22,220	22,350	22,100	21,930	21,890
Secondary Air Temp. (°F)	492	499	495	501	490	498	496	502	497
Primary Air Flow (lb/hr)	935	1,100	1,737	1,250	1,722	1,280	1,559	1,659	1,448
Primary Air Temp. (°F)	73	70	73	71	74	69	74	60	67
Fuel Flow (lb/hr)	1,494	1,498	1,492	1,505	1,497	1,473	1,472	1,471	1,468
Fuel Temp. (°F)	205	208	210	211	204	209	206	209	210
Fuel Pressure at Burner (psig)	54	54	53	54	57	65	65	65	66
Atomizing Steam Flow (lb/hr)	211	206	198	213	417	252	260	256	257
Atomizing Steam Pressure at Burner (psig)	59	60	57	62	67	76	77	75	76
Burner Position (in)	1	1	1	1	1	1	1	1	1
Swirl Setting	3	3	3	3	4	2-1/2	3	3-1/2	3-1/2
Average Flue-Gas Temp. (°F)	543	540	568	553	581	544	557	566	574
Carbon Conversion Eff. (%)	99.97	99.97	99.98	99.97	99.97	99.98	99.98	99.97	99.97
Boiler Efficiency (%) (Heat Loss Method)	82.0	82.5	82.0	82.3	80.6	81.6	80.9	81.2	81.9

TABLE 6. FLUE-GAS ANALYSIS AND PARTICULATE EMISSIONS: NO. 6 FUEL OIL DURATION TESTS

Test No.	0823-1	0823-2	0824-1	0824-2	0826-1	0826-2	0827-1	0827-2	0830-1
Flue-Gas Analysis									
O_2 (%)	2.4	2.4	2.5	2.4	2.3	2.4	2.4	2.4	2.4
CO_2 (%)	13.7	13.5	13.7	13.8	13.5	13.7	13.8	13.7	13.7
CO (ppm_v)	24	22	48	34	29	29	20	23	27
SO_2 (ppm_v)	504	512	500	508	508	490	533	519	508
(lb/MBtu)	0.92	0.95	0.94	0.91	0.92	0.91	0.98	0.96	0.90
NO_x (ppm_v)	210	172	203	196	225	199	237	205	234
(lb/MBtu)	0.28	0.23	0.27	0.25	0.29	0.27	0.31	0.27	0.30
THC* (ppm_v)	0.7	1.0	0.3	0.2	0.3	0.2	0.4	0.9	0.6
Opacity, Uncontrolled (%)	N.A.	N.A.	5	4	8	8	10	9	0
Particulate									
Emissions, Uncontrolled									
(lb/hr)	0.91	0.92	0.99	0.50	0.86	0.88	0.88	0.88	1.11
(lb/MBtu)	0.03	0.03	0.04	0.02	0.03	0.03	0.03	0.03	0.04
Carbon Content (%)+	26.8	36.2	28.9	29.7	30.5	31.0	47.1	45.3	33.1

---

*Total Hydrocarbons.

+Loss-on-ignition method.

TABLE 6. FLUE-GAS ANALYSIS AND PARTICULATE EMISSIONS: NO. 6 FUEL OIL DURATION TESTS (continued)

Test No.	0830-2	0831-1	0831-2	0901-1	0901-2	0902-1	0902-2	0903-1	0903-2
Flue-Gas Analysis									
O_2 (%)	2.4	2.4	2.5	2.4	2.4	2.5	2.5	2.4	2.4
CO_2 (%)	13.7	13.4	13.3	13.6	13.5	13.6	13.6	13.7	13.6
CO (ppm_v)	47	32	37	29	35	36	48	26	27
SO_2 (ppm_v)	461	460	429	388	398	380	402	398	402
(lb/MBtu)	0.83	0.85	0.80	0.70	0.74	0.71	0.73	0.72	0.74
NO_x (ppm_v)	203	212	190	193	192	181	184	173	178
(lb/MBtu)	0.26	0.28	0.25	0.25	0.26	0.24	0.24	0.22	0.24
THC* (ppm_v)	0.3	1.0	0.2	0.5	0.2	0.6	0.4	0.8	0.6
Opacity, Uncontrolled (%)	N.A.	N.A.	0	0	1	0	5	0	0
Particulate									
Emissions, Uncontrolled									
(lb/hr)	0.86	0.97	0.82	0.86	0.86	0.97	1.09	0.98	1.11
(lb/MBtu)	0.03	0.03	0.03	0.03	0.03	0.04	0.04	0.04	0.04
Carbon Content (%)+	40.9	39.2	36.7	40.9	40.9	29.0	26.6	34.2	33.1

---

*Total Hydrocarbons.

+Loss-on-ignition method.

TABLE 7. FUEL ANALYSIS: SRC FUEL PARAMETRIC TESTS USING SLOW MIX BURNER*

Test No.	1024-1	1024-2	1025-1	1025-2
Solid Particle Size Consist (% minus 200 mesh)	--	--	96	96
Ultimate analysis (wt %) on moisture free basis				
Hydrogen	6.23	6.23	6.17	6.17
Carbon	86.72	86.72	86.53	86.53
Nitrogen	1.94	1.94	1.98	1.98
Sulfur	0.82	0.82	0.93	0.93
Oxygen	3.85	3.85	4.03	4.03
Ash	0.43	0.43	0.37	0.37
Moisture (%)	0.37	0.37	0.38	0.38
Higher Heating Value on Moisture Free Basis (Btu/lb)	15,839	15,839	15,850	15,850

---

*Ultimate analysis, moisture content, and heating value were determined according to ASTM Section 5 (Petroleum Product Lubricants and Fossil Fuels) standards.

TABLE 8. OPERATING CONDITIONS AND BOILER PERFORMANCE: SRC FUEL PARAMETRIC TESTS USING SLOW MIX BURNER

Test No.	1024-1	1024-2	1025-1	1025-2
Thermal Input (MBtu/hr)	29.88	29.33	30.22	30.26
Steam Flow (lb/hr)	24,030	23,970	23,920	24,050
Flue-Gas O_2 (%)	5.4	3.2	5.1	3.0
Excess Air (%)	32.0	16.5	29.4	14.5
Secondary Air Flow (lb/hr)	23,630	19,860	22,340	19,860
Secondary Air Temp. (°F)	530	615	503	512
Primary Air Flow (lb/hr)	4,555	4,450	4,916	4,683
Primary Air Temp. (°F)	51	56	44	51
Solid Fuel Flow (lb/hr)	1,725	1,690	1,766	1,781
Natural Gas (scfm)	0	0	0	0
Burner Position (in)	1-1/8	1-1/8	1	1/2/1-1/8
Swirl Setting	8	8/7-1/2	8	7-3/4
Average Flue-Gas Temp. (°F)	526	548	544	606
Carbon Conversion Eff. (%)	98.6	98.8	98.2	97.8
Boiler Efficiency (%) (Heat Loss Method)	82.7	83.7	82.2	81.5

TABLE 9. FLUE-GAS ANALYSIS AND PARTICULATE EMISSIONS: SRC FUEL PARAMETRIC TESTS USING SLOW MIX BURNER

Test No.	1024-1	1024-2	1025-1	1025-2
Flue-Gas Analysis				
O_2 (%)	5.4	3.2	5.1	3.1
CO_2 (%)	12.8	14.6	13.1	14.7
CO (ppm_v)	83	170	70	370
SO_2 (ppm_v)	566	653	577	642
(lb/MBtu)	1.27	1.29	1.26	1.23
NO_x (ppm_v)	494	414	458	402
(lb/MBtu)	0.80	0.59	0.72	0.56
THC* (ppm_v)	1	1	2	2
Opacity, Uncontrolled (%)	15	29	20	48
Particulate				
Emissions, Uncontrolled				
(lb/hr)	30.3	28.5	30.6	35.5
(lb/MBtu)	1.11	1.07	1.10	1.26
Carbon Content (%)+	70.6	60.9	89.5	93.3

---

*Total hydrocarbons.

+Loss-on-ignition method.

TABLE 10. FUEL ANALYSIS: SRC FUEL DURATION TESTS *

Slow Mix Burner Used 10/26 Through 11/04 6-Inch
"Econo" Burner Used 11/12

Test No.	1026-1	1029-1	1029-2	1101-1	1101-2	1103-1	1104	1112-1	1112-2
Solid Particle Size Consist (% minus 200 mesh)	95	91	91	100	100	93	90	--	--
Ultimate analysis (wt %) on moisture free basis									
Hydrogen	6.16	6.17	6.17	6.14	6.14	6.18	5.67	6.03	6.57
Carbon	86.97	86.30	86.30	87.04	87.04	86.66	86.12	86.47	86.74
Nitrogen	1.91	1.75	1.75	1.98	1.98	2.01	2.02	2.02	2.08
Sulfur	0.97	0.94	0.94	0.97	0.97	0.99	1.03	1.03	1.02
Oxygen	3.93	4.33	4.33	3.76	3.76	4.02	5.06	4.37	3.51
Ash	0.06	0.52	0.52	0.11	0.11	0.14	0.11	0.07	0.08
Moisture (%)	0.63	0.42	0.42	0.67	0.67	0.46	0.53	0.56	0.59
Higher Heating Value on Moisture-Free Basis (Btu/lb)	15,804	15,865	15,865	15,812	15,812	15,922	15,925	15,866	15,903

---

[*] Ultimate analysis, moisture content, and heating value were determined according to ASTM Section 5 (Petroleum Product Lubricants and Fossil Fuels) standards.

TABLE 10. FUEL ANALYSIS: SRC FUEL DURATION TESTS* (continued)

Slow Mix Burner Used 10/26 Through 11/04 6-Inch
"Econo" Burner Used 11/12

Test No.	1115-1	1115-2	1117-1	1117-2	1118-1	1118-2	1118-3	1119-1	1119-2	1119-3
Solid Particle Size Consist (% minus 200 mesh)	100	100	100	100	98	98	98	100	100	100
Ultimate analysis (wt %) on moisture free basis										
Hydrogen	6.14	6.10	6.09	6.24	6.11	6.13	6.13	6.32	6.05	6.31
Carbon	86.89	86.93	86.78	86.48	85.81	85.05	85.05	86.55	86.42	86.79
Nitrogen	2.07	2.01	1.96	2.02	2.06	2.06	2.06	2.07	2.07	2.09
Sulfur	1.00	0.99	0.97	0.97	0.89	1.01	1.01	1.03	1.03	1.03
Oxygen	3.82	3.89	4.13	4.27	4.99	5.59	5.59	3.87	4.25	3.60
Ash	0.08	0.07	0.07	0.03	0.15	0.16	0.16	0.16	0.19	0.19
Moisture (%)	0.50	0.47	0.62	0.43	0.66	0.62	0.62	0.51	0.61	0.57
Higher Heating Value on Moisture-Free Basis (Btu/lb)	15,880	15,876	15,884	15,793	15,950	15,950	15,950	15,766	15,892	15,818

---

*Ultimate analysis, moisture content, and heating value were determined according to ASTM Section 5 (Petroleum Product Lubricants and Fossil Fuels) standards.

TABLE 11. OPERATING CONDITIONS AND BOILER PERFORMANCE: SRC FUEL DURATION TESTS

Slow Mix Burner Used 10/26 Through 11/04 6-Inch
"Econo" Burner Used 11/12

Test No.	1026-1	1029-1	1029-2	1101-1	1101-2	1103-1	1104	1112-1	1112-2
Thermal Input (MBtu/hr)	29.68	29.85	30.06	29.46	29.74	29.91	30.33	30.23	30.63
Steam Flow (lb/hr)	23,770	23,730	23,820	23,630	23,360	23,790	23,730	23,690	23,760
Flue-Gas O_2 (%)	3.2	2.7	4.4	4.4	4.9	5.1	5.3	5.4	5.2
Excess Air (%)	15.1	12.8	25.0	24.2	28.6	29.7	38.1	31.8	29.8
Secondary Air Flow (lb/hr)	19,610	19,050	21,480	20,980	22,020	23,070	23,500	23,340	23,190
Secondary Air Temp. (°F)	597	610	583	601	567	536	518	589	574
Primary Air Flow (lb/hr)	4,729	4,631	4,730	4,512	4,581	4,674	4,774	5,058	5,117
Primary Air Temp (°F)	52	66	56	72	69	60	46	95	86
Solid Fuel Flow (lb/hr)	1,729	1,729	1,730	1,690	1,721	1,720	1,750	1,611	1,643
Natural Gas (scfm)	0	0	0	0	0	0	0	25.60	24.87
Burner Position (in)	1	1	1	--	--	1	3/4	1	2-1/4
Swirl Setting	8	8	7-1/2	8	7-1/2	8	8	8	6-1/2
Average Flue-Gas Temp. (°F)	538	595	630	540	573	579	560	571	568
Carbon Conversion Eff. (%)	97.8	98.4	98.9	98.5	98.7	98.7	98.9	98.0	97.7
Boiler Efficiency (%) (Heat Loss Method)	83.2	82.8	81.1	82.9	81.9	81.8	82.3	81.4	80.8

TABLE 11. OPERATING CONDITIONS AND BOILER PERFORMANCE SRC FUEL DURATION TESTS (continued)

Using 6-Inch "Econo" Burner

Test No.	1115-1	1115-2	1117-1	1117-2	1118-1	1118-2	1118-3	1119-1	1119-2	1119-3
Thermal Input (MBtu/hr)	30.25	29.73	30.08	30.29	30.26	31.11	30.98	31.08	31.47	31.11
Steam Flow (lb/hr)	24,110	23,400	24,000	23,910	23,780	24,540	24,350	24,120	24,210	24,090
Flue-Gas O_2 (%)	5.4	6.5	6.1	6.2	5.8	6.0	6.1	6.0	6.0	6.3
Excess Air (%)	32.1	42.4	38.4	39.3	36.1	37.6	38.5	37.9	37.7	40.8
Secondary Air Flow (lb/hr)	22,990	23,460	24,130	24,400	24,170	25,920	25,910	23,700	23,730	23,960
Secondary Air Temp. (°F)	592	592	577	574	588	562	562	590	587	585
Primary Air Flow (lb/hr)	5,451	6,113	5,796	5,542	5,827	5,834	5,895	5,823	5,709	5,825
Primary Air Temp. (°F)	62	58	76	78	88	87	86	74	95	93
Solid Fuel Flow (lb/hr)	1,616	1,692	1,599	1,624	1,602	1,642	1,639	1,677	1,691	1,674
Natural Gas (scfm)	25.64	0	25.80	24.38	25.07	27.21	26.18	24.72	23.99	24.12
Burner Position (in)	1/2	1/2	0/1/2	0	0/1/2	1/2	1/2	1/2	1/2	1/2
Swirl Setting	6	6	6/6-1/2	6-1/2	6	6	6	6	6	6
Average Flue-Gas Temp. (°F)	523	522	531	535	539	551	552	534	535	540
Carbon Conversion Eff. (%)	98.5	98.9	98.7	98.8	98.7	98.9	99.0	99.4	99.0	99.5
Boiler Efficiency (%) (Heat Loss Method)	82.8	82.4	82.4	82.1	82.6	82.3	82.3	82.5	82.4	82.3

TABLE 12. FLUE-GAS ANALYSIS AND PARTICULATE EMISSIONS: SRC FUEL DURATION TESTS

Using 6-Inch "Econo" Burner

Test No.	1026	1029-1	1029-2	1101-1	1101-2	1103	1104	1112-1	1112-2
Flue-Gas Analysis									
O_2 (%)	3.2	2.7	4.4	4.4	4.9	5.1	5.3	5.4	5.2
CO_2 (%)	14.7	15.1	13.7	13.6	13.2	13.0	12.8	12.5	12.6
CO (ppm$_v$)	248	313	83	88	61	63	54	83	82
SO_2 (ppm$_v$)	629	674	602	612	584	585	580	588	603
(lb/MBtu)	1.23	1.23	1.26	1.30	1.29	1.29	1.29	1.30	1.32
NO_x (ppm$_v$)	447	451	543	544	580	596	498	732	665
(lb/MBtu)	0.63	0.65	0.82	0.83	0.92	0.94	0.80	1.16	1.05
THC* (ppm$_v$)	2	2	1	1	1	1	2	2	1
Opacity, Uncontrolled (%)	43	44	17	15	11	14	14	16	19
Particulate Emissions, Uncontrolled									
(lb/hr)	34.1	28.9	19.7	26.2	23.0	22.2	21.4	29.8	35.4
(lb/MBtu)	1.25	1.06	0.72	0.85	0.98	0.81	0.77	1.10	1.28
Carbon Content (%)+	95.1	81.5	82.7	84.7	84.8	86.5	77.5	94.9	95.5

---

*Total hydrocarbons.

+Loss-on-ignition method.

TABLE 12. FLUE-GAS ANALYSIS AND PARTICULATE EMISSIONS: SRC FUEL DURATION TESTS (continued)

Using 6-Inch "Econo" Burner

Test No.	1115-1	1115-2	1117-1	1117-2	1118-1	1118-2	1118-3	1119-1	1119-2	1119-3
Flue-Gas Analysis										
O_2 (%)	5.4	6.5	6.1	6.2	5.8	6.0	6.1	6.0	6.0	6.3
CO_2 (%)	12.6	11.7	12.2	12.0	12.3	12.2	12.1	12.1	12.1	12.0
CO (ppm$_v$)	142	30	56	51	42	41	38	62	67	70
SO_2 (ppm$_v$)	568	522	528	499	620	590	600	548	553	542
(lb/MBtu)	1.26	1.28	1.21	1.17	1.39	1.32	1.36	1.28	1.28	1.28
NO_x (ppm$_v$)	659	602	661	549	890	900	950	773	717	695
(lb/MBtu)	1.05	1.06	1.09	0.92	1.43	1.45	1.54	1.30	1.19	1.18
THC* (ppm$_v$)	1	1	1	1	1	1	1	2	1	1
Opacity, Uncontrolled (%)	--	15	16	14	14	16	15	13	12	12
Particulate Emissions, Uncontrolled										
(lb/hr)	24.04	18.51	20.23	20.53	19.87	19.15	18.27	20.94	18.29	17.54
(lb/MBtu)	0.88	0.69	0.75	0.75	0.73	0.68	0.66	0.76	0.68	0.66
Carbon Content (%)+	93.2	84.7	93.6	86.1	90.8	82.9	78.9	42.7	85.9	41.3

---

*Total hydrocarbons.

+Loss-on-ignition method.

TABLE 13. FUEL ANALYSIS: SRC RESIDUAL FUEL OIL PARAMETRIC TESTS*

Test No.	1207-1	1207-2	1208-1	1208-2	1215-3	1216-3
Ultimate analysis (wt %) on moisture free basis						
Hydrogen	7.97	8.02	7.80	8.06	8.04	8.14
Carbon	86.43	86.93	85.18	86.44	87.00	86.53
Nitrogen	1.31	1.31	1.23	1.32	1.35	1.35
Sulfur	0.43	0.49	0.43	0.40	0.44	0.47
Oxygen	3.80	3.20	5.30	3.71	3.13	3.43
Ash	0.06	0.05	0.06	0.07	0.04	0.08
Moisture (%)	0.22	0.19	0.29	0.18	0.36	1.32
Higher Heating Value (Btu/lb)	16,808	16,817	16,761	16,764	16,763	16,678

---

*Ultimate analysis, moisture content, and heating value were determined according to ASTM Section 5 (Petroleum Product Lubricants and Fossil Fuels) standards.

TABLE 14. OPERATING CONDITIONS AND BOILER PERFORMANCE: SRC RESIDUAL FUEL OIL PARAMETRIC TESTS

Test No.	1207-1	1207-2	1208-1	1208-2	1215-3	1216-3
Thermal Input (MBtu/hr)	30.10	29.77	29.89	29.66	29.03	29.57
Steam Flow (lb/hr)	24,230	24,020	23,960	23,760	24,500	24,440
Flue-Gas O_2 (%)	2.8	1.7	3.1	1.5	0.4	4.4
Excess Air (%)	15.7	8.6	17.1	7.7	2.3	25.4
Secondary Air Flow (lb/hr)	23,000	21,080	23,040	20,190	17,880	21,820
Secondary Air Temp. (°F)	592	589	505	502	604	588
Primary Air Flow (lb/hr)	1,087	463	1,032	2,621	3,319	4,573
Primary Air Temp. (°F)	90	93	94	85	44	35
Fuel Flow (lb/hr)	1,602	1,596	1,622	1,626	1,578	1,596
Fuel Temp. (°F)	288	304	303	301	303	295
Fuel Pressure at Burner (psig)	97	90	91	100	95	100
Atomizing Steam Flow (lb/hr)	338	315	306	336	290	301
Atomizing Steam Pressure at Burner (psig)	105	98	96	108	104	106
Burner Position (in)	1-1/8	1-1/4	1	1	-5/8	-1/4
Swirl Setting	4-1/4	4-1/4	4-1/4	4-1/4	4	4
Average Flue-Gas Temp. (°F)	492	490	486	492	485	515
Carbon Conversion Eff. (%)	99.8	99.9	99.6	99.6	99.8	99.9
Boiler Efficiency (%) (Heat Loss Method)	85.6	86.0	85.4	85.4	86.2	84.3

TABLE 15. FLUE-GAS ANALYSIS AND PARTICULATE EMISSIONS: SRC RESIDUAL FUEL OIL PARAMETRIC TESTS

Test No.	1207-1	1207-2	1208-1	1208-2	1215-3	1216-3
Flue-Gas Analysis						
O_2 (%)	2.8	1.7	3.1	1.5	0.4	4.4
CO_2 (%)	14.7	15.8	14.4	15.6	16.7	13.8
CO (ppm_v)	53	84	35	94	123	25
SO_2 (ppm_v)	380	409	315	399	396	343
(lb/MBtu)	0.71	0.71	0.59	0.70	0.66	0.69
NO_x (ppm_v)	487	468	495	509	483	533
(lb/MBtu)	0.65	0.58	0.66	0.64	0.57	0.76
THC* (ppm_v)	0.8	0.7	0.2	0.2	0.2	0.4
Opacity, Uncontrolled (%)	11	17	11	16	11	6
Particulate						
Emissions, Uncontrolled						
(lb/hr)	3.55	3.60	6.52	6.18	6.44	2.39
(lb/MBtu)	0.132	0.134	0.240	0.226	0.243	0.090
Carbon Content (%)+	59.1	50.8	88.7	83.1	54.3	76.8

---

*Total hydrocarbons.

+Loss-on-ignition method.

TABLE 16. FUEL ANALYSIS: SRC RESIDUAL FUEL OIL DURATION TESTS*

Test No.	1210	1213-1	1213-2	1214-1	1214-2
Ultimate analysis (wt %) on moisture free basis					
Hydrogen	8.11	7.81	7.93	8.10	7.99
Carbon	86.96	85.66	86.71	86.92	85.78
Nitrogen	1.26	1.29	1.31	1.27	1.19
Sulfur	0.56	0.45	0.57	0.42	0.49
Oxygen	3.02	4.73	3.37	3.21	4.48
Ash	0.09	0.06	0.11	0.08	0.07
Moisture (%)	0.23	0.39	0.37	0.39	0.38
Higher Heating Value (Btu/lb)	16,713	16,714	16,672	16,808	16,755

---

*Ultimate analysis, moisture content, and heating value were determined according to ASTM Section 5 (Petroleum Product Lubricants and Fossil Fuels) standards.

TABLE 16. FUEL ANALYSIS: SRC RESIDUAL FUEL OIL DURATION TESTS*(continued)

Test No.	1215-1	1215-2	1216-1	1216-2	1217-1	1217-2
Ultimate analysis (wt %) on moisture free basis						
Hydrogen	7.98	8.04	8.07	8.14	8.05	8.09
Carbon	87.02	87.00	86.34	86.53	86.19	86.98
Nitrogen	1.30	1.35	1.36	1.35	1.27	1.29
Sulfur	0.51	0.44	0.47	0.47	0.48	0.46
Oxygen	3.14	3.13	3.72	3.43	3.94	3.16
Ash	0.05	0.04	0.04	0.08	0.07	0.02
Moisture (%)	0.34	0.36	0.42	1.32	0.53	0.70
Higher Heating Value (Btu/lb)	16,721	16,763	16,737	15,678	16,601	16,628

---

*Ultimate analysis, moisture content, and heating value were determined according to ASTM Section 5 (Petroleum Product Lubricants and Fossil Fuels) standards.

TABLE 17. OPERATING CONDITIONS AND BOILER PERFORMANCE: SRC RESIDUAL FUEL OIL DURATION TESTS

Test No.	1210	1213-1	1213-2	1214-1	1214-2
Thermal Input (MBtu/hr)	29.78	29.02	29.25	29.31	29.11
Steam Flow (lb/hr)	23,930	24,220	24,060	23,290	24,220
Flue-Gas O_2 (%)	2.4	2.6	2.6	2.4	2.5
Excess Air (%)	13.3	14.6	14.2	13.0	13.5
Secondary Air Flow (lb/hr)	20,440	20,370	20,560	19,650	20,310
Secondary Air Temp. (°F)	594	596	589	598	595
Primary Air Flow (lb/hr)	2,985	2,644	2,619	1,918	1,671
Primary Air Temp. (°F)	36	24	28	33	44
Fuel Flow (lb/hr)	1611	1566	1584	1578	1566
Fuel Temp. (°F)	304	303	298	302	300
Fuel Pressure at Burner (psig)	100	100	100	94	94
Atomizing Steam Flow (lb/hr)	339	303	303	294	293
Atomizing Steam Pressure at Burner (psig)	108	107	107	104	104
Burner Position (in)	-3/4	-1	-1	0	0
Swirl Setting	4-1/4	4	4	4	4
Average Flue-Gas Temp (°F)	493	489	491	485	490
Carbon Conversion Eff. (%)	99.8	99.8	99.9	99.7	99.7
Boiler Efficiency (%) (Heat Loss Method)	85.1	85.6	85.4	85.4	85.5

TABLE 17. OPERATING CONDITIONS AND BOILER PERFORMANCE: SRC RESIDUAL FUEL OIL DURATION TESTS (continued)

Test No.	1215-1	1215-2	1216-1	1216-2	1217-1	1217-2
Thermal Input (MBtu/hr)	29.27	29.21	29.13	29.31	29.05	29.08
Steam Flow (lb/hr)	24,580	24,530	24,220	24,240	24,400	24,440
Flue-Gas O_2 (%)	2.6	2.6	2.6	2.6	2.7	2.5
Excess Air (%)	14.1	14.2	14.1	14.2	14.4	13.8
Secondary Air Flow (lb/hr)	20,510	20,360	20,150	20,120	20,920	20,690
Secondary Air Temp. (°F)	598	594	601	597	592	596
Primary Air Flow (lb/hr)	3,071	3,039	3,316	3,346	2,695	2,684
Primary Air Temp. (°F)	48	40	40	39	32	36
Fuel Flow (lb/hr)	1,578	1,572	1,572	1,590	1,578	1,576
Fuel Temp (°F)	298	298	302	301	298	304
Fuel Pressure at Burner (psig)	93	92	96	98	85	86
Atomizing Steam Flow (lb/hr)	281	280	284	284	268	268
Atomizing Steam Pressure at Burner (psig)	100	100	101	101	104	104
Burner Position (in)	-5/8	-3/8	-3/8	-3/8	-1/2	-1/2
Swirl Setting	4	4	4	4	4-1/4	4-1/4
Average Flue-Gas Temp. (°F)	487	490	490	492	525	493
Carbon Conversion Eff. (%)	99.8	99.8	99.7	99.7	99.7	99.7
Boiler Efficiency (%) (Heat Loss Method)	85.4	85.2	85.4	85.2	84.5	85.1

TABLE 18. FLUE-GAS ANALYSIS AND PARTICULATE EMISSIONS: SRC RESIDUAL FUEL OIL DURATION TESTS

Test No.	1210	1213-1	1213-2	1214-1	1214-2
Flue-Gas Analysis					
O_2 (%)	2.4	2.6	2.6	2.4	2.5
CO_2 (%)	14.7	14.7	14.9	14.9	14.8
CO (ppm_v)	29	29	36	37	44
SO_2 (ppm_v)	375	380	391	365	379
(lb/MBtu)	0.71	0.70	0.73	0.67	0.70
NO_x (ppm_v)	542	527	529	427	444
(lb/MBtu)	0.74	0.70	0.71	0.56	0.58
THC* (ppm_v)	0.6	0.6	0.3	0.9	0.6
Opacity, Uncontrolled (%)	7	3	3	10	8
Particulate					
Emissions, Uncontrolled					
(lb/hr)	3.59	3.00	2.46	4.44	4.55
(lb/MBtu)	0.133	0.114	0.093	0.167	0.173
Carbon Content (%)+	68.4	77.6	78.6	87.5	84.1

---

*Total Hydrocarbons.

+Loss-on-ignition method.

TABLE 18. FLUE-GAS ANALYSIS AND PARTICULATE EMISSIONS: SRC RESIDUAL FUEL OIL DURATION TESTS (continued)

Test No.	1215-1	1215-2	1216-1	1216-2	1217-1	1217-2
Flue-Gas Analysis						
O_2 (%)	2.6	2.6	2.6	2.6	2.7	2.5
CO_2 (%)	14.6	14.6	14.6	14.7	14.8	14.7
CO (ppm$_v$)	40	49	30	30	--	31
SO_2 (ppm$_v$)	345	352	360	360	350	380
(lb/MBtu)	0.65	0.66	0.67	0.67	0.65	0.72
NO_x (ppm$_v$)	465	466	528	524	500	506
(lb/MBtu)	0.63	0.63	0.71	0.70	0.67	0.69
THC* (ppm$_v$)	0.5	0.5	0.6	0.6	0.8	0.5
Opacity, Uncontrolled (%)	7	7	6	6	8	8
Particulate						
Emissions, Uncontrolled						
(lb/hr)	3.63	4.00	4.74	5.21	4.42	4.83
(lb/MBtu)	0.137	0.152	0.180	0.196	0.168	0.184
Carbon Content (%)+	71.0	84.1	85.5	89.5	87.3	88.5

---

*Total Hydrocarbons.

+Loss-on-ignition method.

TABLE 19. FUEL ANALYSIS: SRC/WATER SLURRY PARAMETRIC TESTS*

Test No.	0106-1	0106-2	0107-1	0107-2	0110-1	0110-2
SRC-I Concentration (%)	66.0	66.0	66.4	65.5	65.3	65.9
Lomar-D Concentration (%)	0.5	0.5	0.5	0.5	0.5	0.5
Particle Size Consist (% minus 200 mesh)	91	87	88	91	91	90
Ultimate Analysis on Moisture-and-Lomar-D-Free Basis (%)						
Hydrogen	6.18	6.18	6.16	6.16	6.06	6.06
Carbon	86.27	86.27	85.55	85.55	86.21	86.21
Nitrogen	1.89	1.89	1.93	1.93	1.77	1.77
Sulfur	0.98	0.98	0.97	0.97	0.96	0.96
Oxygen	4.38	4.38	4.96	4.96	4.43	4.43
Ash	0.31	0.31	0.43	0.43	0.56	0.56
Higher Heating Value on Moisture-Free Basis (Btu/lb)	15,736	15,736	15,851	15,851	15,843	15,843

---

*Ultimate analysis, moisture content, and heating value were determined according to ASTM Section 5 (Petroleum Product Lubricants and Fossil Fuels) standards.

TABLE 20. OPERATING CONDITIONS AND BOILER PERFORMANCE: SRC/WATER SLURRY PARAMETRIC TESTS

Test No.	0106-1	0106-2	0107-1	0107-2	0110-1	0110-2
Thermal Input (MBtu/hr)	30.60	30.45	29.54	29.23	30.77	31.35
Flue-Gas O_2 (%)	2.8	2.4	2.9	2.1	4.0	4.0
Excess Air (%)	13.9	11.2	14.5	9.6	21.8	21.8
Steam Flow (lb/hr)	24,300	23,400	23,000	23,360	24,120	24,430
Secondary Air Flow (lb/hr)	18,670	18,200	18,220	17,350	20,450	20,560
Secondary Air Temp. (°F)	557	570	499	502	499	569
Primary Flow (lb/hr)	4,402	4,380	4,559	4,470	5,205	5,198
Primary Air Temp. (°F)	549	545	500	494	492	561
Fuel Flow (lb/hr)	2,664	2,625	2,568	2,580	2,700	2,688
Fuel Pressure at Burner (psig)	85	87	85	90	89	89
Fuel Temp. (°F)	159	165	104	103	102	101
Atomizing Air Flow (lb/hr)	980	931	1,350	1,104	1,094	1,093
Atomizing Air Pressure at Burner (psig)	86	86	85	86	85	85
Burner Position (in)	0	0	0	1/2	0	0
Swirl Setting	2-1/4	2-1/4	2	2-1/4	2-1/4	2
Average Flue-Gas Temp. (°F)	516	532	515	536	525	535
Carbon Conversion Eff. (%)	98.8	98.5	98.9	98.9	98.6	98.8
Boiler Efficiency (%) (Heat Loss Method)	81.6	81.1	81.4	80.9	80.2	80.5

TABLE 21. FLUE-GAS ANALYSIS AND PARTICULATE EMISSIONS: SRC/WATER SLURRY PARAMETRIC TESTS

Test No.	0106-1	0106-2	0107-1	0107-2	0110-1	0110-2
Flue-Gas Analysis						
O_2 (%)	2.8	2.4	2.9	2.1	4.0	4.0
CO_2 (%)	15.6	16.0	15.1	16.0	14.0	14.0
CO (ppm_v)	78	280	94	259	51	51
SO_2 (ppm_v)	746	790	755	797	714	718
(lb/MBtu)	1.38	1.42	1.42	1.42	1.46	1.47
NO_x (ppm_v)	371	325	350	321	416	440
(lb/MBtu)	0.42	0.49	0.65	0.41	0.47	0.61
THC* (ppm_v)	1	1	1	1	1	1
Opacity, Uncontrolled (%)	10	10	12	14	12	12
Particulate						
Emissions, Uncontrolled						
(lb/hr)	25.48	31.75	23.36	23.79	29.23	26.79
(lb/MBtu)	0.92	1.15	0.86	0.88	1.04	0.95
Carbon Content (%)+	68.7	71.0	67.4	68.1	71.2	70.0

---

*Total hydrocarbons.

+Loss-on-ignition method.

TABLE 22. FUEL ANALYSIS: SRC/WATER SLURRY DURATION TESTS*

Test No.	0111-1	0111-2	0112-1	0112-2	0113-1	0113-2	0114-1	0114-2
SRC-I Concentration (%)	66.5	66.7	66.6	66.5	66.7	66.7	66.6	66.6
Lomar-D Concentration (%)	0.5	0.5	0.5	0.5	0.5	0.5	0.5	0.5
Particulate Size Consist (% minus 200 mesh)	90	91	89	91	88	88	89	89
Ultimate Analysis on Moisture-and-Lomar-D-Free Basis (%)								
Hydrogen	6.10	6.10	5.83	5.83	5.95	5.95	5.98	5.98
Carbon	86.53	86.53	86.63	86.63	86.10	86.10	86.89	86.89
Nitrogen	1.81	1.81	1.91	1.91	1.80	1.80	1.73	1.73
Sulfur	0.96	0.96	0.94	0.94	0.89	0.89	0.91	0.91
Oxygen	4.14	4.14	4.35	4.35	5.12	5.12	4.28	4.28
Ash	0.46	0.46	0.34	0.34	0.13	0.13	0.21	0.21
Higher Heating Value on Moisture-Free Basis (Btu/lb)	15,750	15,750	15,907	15,907	15,880	15,880	15,844	15,844

---

*Ultimate analysis, moisture content, and heating value were determined according to ASTM Section 5 (Petroleum Product Lubricants and Fossil Fuels) standards.

TABLE 23. OPERATING CONDITIONS AND BOILER PERFORMANCE: SRC/WATER SLURRY DURATION TESTS

Test No.	0111-1	0111-2	0112-1	0112-2	0113-1	0113-2	0114-1	0114-2
Thermal Input (MBtu/hr)	28.50	28.64	28.78	28.75	28.94	29.01	28.93	28.68
Flue-Gas O_2 (%)	3.0	3.1	3.1	3.1	3.1	3.0	3.0	3.0
Excess Air (%)	15.2	15.5	15.8	15.9	15.7	14.9	15.3	15.2
Steam Flow (lb/hr)	22,960	23,020	23,020	22,980	23,360	23,250	23,250	23,170
Secondary Air Flow (lb/hr)	17,680	17,730	17,750	17,590	17,800	17,580	17,870	17,760
Secondary Air Temp. (°F)	596	601	600	598	598	603	600	602
Primary Air Flow (lb/hr)	4,579	4,584	4,585	4,601	4,487	4,499	4,533	4,529
Primary Air Temp. (°F)	588	592	595	591	588	593	592	592
Fuel Flow (lb/hr)	2,436	2,439	2,439	2,437	2,454	2,460	2,454	2,430
Fuel Pressure at Burner (psig)	88	90	87	90	88	91	87	89
Fuel Temp. (°F)	96	94	96	97	96	100	98	99
Atomizing Air Flow (lb/hr)	1,073	1,075	1,085	1,115	1,117	1,113	1,113	1,090
Atomizing Air Pressure at Burner (psig)	84	84	83	85	85	86	85	84
Burner Position (in)	0	0	0	0	0	0	0	0
Swirl Setting	2	2	2	2	2	2	2	2
Average Flue-Gas Temp. (°F)	510	522	506	526	496	519	502	523
Carbon Conversion Eff. (%)	98.8	98.8	98.9	99.1	99.0	98.9	99.0	98.8
Boiler Efficiency (%) (Heat Loss Method)	81.5	81.2	82.1	81.7	82.3	81.9	82.0	81.3

TABLE 24. FLUE-GAS ANALYSIS AND PARTICULATE EMISSIONS: SRC/WATER SLURRY DURATION TESTS

Test No.	0111-1	0111-2	0112-1	0112-2	0113-1	0113-2	0114-1	0114-2
Flue-Gas Analysis								
O_2 (%)	3.0	3.1	3.1	3.1	3.1	3.0	3.0	3.0
CO_2 (%)	14.8	14.8	15.1	14.9	15.0	15.2	14.9	14.7
CO (ppm_v)	78	80	70	60	83	70	81	87
SO_2 (ppm_v)	752	741	620	621	675	699	696	695
(lb/MBtu)	1.47	1.45	1.18	1.20	1.29	1.32	1.35	1.36
NO_x (ppm_v)	357	363	376	374	409	363	351	334
(lb/MBtu)	0.52	0.51	0.51	0.52	0.56	0.49	0.49	0.47
THC* (ppm_v)	2	2	1	1	1	1	1	1
Opacity, Uncontrolled (%)	12	12	12	12	11	11	12	12
Particulate								
Emissions, Uncontrolled								
(lB/hr)	25.74	25.74	22.23	20.05	19.31	20.41	20.46	23.08
(lb/MBtu)	1.05	1.00	0.86	0.77	0.74	0.78	0.79	0.90
Carbon Content (%)+	63.8	67.3	71.4	64.7	73.9	73.9	70.4	74.9

---

*Total hydrocarbons.

+Loss-on-ignition method.

TABLE 25. FUEL ANALYSIS: PETC FAST MIX BURNER TESTS[*]

Test No.	0127-1	0131-1	0131-2	0201-1	0202-1	0202-2
Solid Particle Size Consist (% minus 200 mesh)	93	99	99	100	100	98
Ultimate analysis (wt %) on moisture free basis						
Hydrogen	5.95	6.05	6.03	5.96	6.09	6.13
Carbon	86.50	87.14	86.80	86.80	86.85	86.99
Nitrogen	1.91	1.83	1.72	2.03	2.09	2.04
Sulfur	0.92	0.74	0.85	0.88	0.65	0.89
Oxygen	4.54	4.18	4.41	4.23	4.26	3.84
Ash	0.18	0.07	0.19	0.10	0.06	0.12
Moisture (%)	0.28	0.36	0.32	0.43	0.34	0.34
Higher Heating Value on Moisture-Free Basis (Btu/lb)	15,864	15,867	15,911	15,820	15,875	15,889

---

[*] Ultimate analysis, moisture content, and heating value were determined according to ASTM Section 5 (Petroleum Product Lubricants and Fossil Fuels) standards.

TABLE 26. OPERATING CONDITIONS AND BOILER PERFORMANCE: PETC FAST MIX BURNER TESTS

Test No.	0127-1	0131-1	0131-2	0201-1	0202-1	0202-2
Thermal Input (MBtu/hr)	29.39	29.57	29.91	29.27	29.76	29.22
Steam Flow (lb/hr)	23,520	24,290	24,010	23,850	24,130	24,410
Flue-Gas O_2 (%)	5.0	3.4	5.5	2.7	4.2	3.4
Excess Air (%)	28.8	17.5	33.8	12.9	23.6	17.9
Secondary Air Flow (lb/hr)	23,190	20,820	23,840	18,930	21,810	21,120
Secondary Air Temp. (°F)	504	594	575	601	598	506
Primary Air Flow (lb/hr)	3,423	3,448	3,508	3,500	3,373	3,200
Primary Air Temp. (°F)	80	73	71	80	89	81
Solid Fuel Flow (lb/hr)	1,700	1,700	1,700	1,700	1,700	1,700
Natural Gas (scfm)	0	0	0	0	0	0
Burner Position (in)	--	--	--	2-1/8	2-1/8	2-1/8
Swirl Setting	3-1/2	3	3	3-1/2	3-1/2	3-1/2
Average Flue-Gas Temp. (°F)	509	492	509	482	499	497
Carbon Conversion Eff. (%)	98.6	98.8	99.3	98.7	99.2	98.9
Boiler Efficiency (%) (Heat Loss Method)	83.7	85.2	84.1	85.6	85.0	84.8

TABLE 27. FLUE-GAS ANALYSIS AND PARTICULATE EMISSIONS: PETC FAST MIX BURNER TESTS

Test No.	0127-1	0131-1	0131-2	0201-1	0202-1	0202-2
Flue-Gas Analysis						
O_2 (%)	5.0	3.4	5.5	2.7	4.2	3.4
CO_2 (%)	13.2	14.7	12.9	15.2	14.0	14.5
CO (ppm$_v$)	43	56	49	41	49	55
SO_2 (ppm$_v$)	477	500	508	550	498	539
(lb/MBtu)	1.03	0.98	1.14	1.05	1.03	1.07
NO_x (ppm$_v$)	777	829	820	899	920	925
(lb/MBtu)	1.21	1.17	1.32	1.23	1.37	1.32
THC* (ppm$_v$)	1	1	1	1	0.9	0.9
Opacity, Uncontrolled (%)	10	11	11	11	10	10
Particulate						
Emissions, Uncontrolled (lb/hr)	23.4	19.3	11.9	21.1	13.6	19.2
(lb/MBtu)	0.87	0.72	0.44	0.79	0.50	0.71
Carbon Content (%)+	90.0	92.8	90.9	93.5	90.7	86.0

---

*Total hydrocarbons.
+Loss-on-ignition method.

TABLE 28. COMPARISON OF FUELS: SRC COMBUSTION TEST PROGRAM

Fuel	No. 6 Oil Batch A*	No. 6 Oil Batch B*	SRC Residual Fuel Oil*	SRC Fuel Fast Mix Burner*	SRC/ Water Slurry*
SRC-I Concentration (%)	--	--	~50%	--	66.7
Particulate Size Distribution (% minus 200 mesh)	--	--	--	100	91
Ultimate Analysis on Moisture-Free Basis (%)					
Hydrogen	11.78	11.62	7.97	5.95	6.10
Carbon	82.17	84.11	86.43	86.50	86.53
Nitrogen	0.22	0.17	1.31	1.91	1.81
Sulfur	0.64	0.54	0.43	0.92	0.96
Oxygen	5.09	3.43	3.80	4.54	4.14
Ash	0.10	0.13	0.06	0.18	0.46
Moisture (%)	6.3	3.7	0.22	0.28	33.30
Higher Heating Value on Wet Basis (Btu/lb)	17408	18109	16808	15820	10543
Fuel Flow at 30 x 10^6 MBtu/hr Thermal Input, lb/hr	1573	1492	1602	1700	2554
C/H Weight Ratio	6.98	7.24	10.84	14.54	14.19
Stoichiometric Air/Fuel Weight Ratio	13.31	13.54	12.68	11.84	11.91
Excess Air, (%)	21.4	13.5	15.7	28.8	15.5
Combustion Air Temp. (°F)	495	495	592	504	601
Boiler Efficiency, (%)	80.0	82.0	85.6	83.7	81.2
Flue-Gas Analysis					
O_2 (%)	3.7	2.5	2.8	5.0	3.1
CO_2 (%)	12.6	13.3	14.7	13.2	14.2
CO (ppm_v)	22	37	53	43	78
SO_2 (ppm_v)	456	429	380	477	752
(lb/MBtu)	0.91	0.80	0.71	1.03	1.47
NO_x (ppm_v)	213	190	487	777	357
(lb/MBtu)	0.30	0.25	0.65	1.21	0.50
THC** (ppm_v)	0.6	0.2	0.8	1	2
Opacity, Uncontrolled (%)	1	0	11	10	12
Particulate Emissions, Uncontrolled					
(lb/hr)	0.946	0.82	3.55	23.4	25.74
(lb/MBtu)	0.031	0.03	0.132	0.87	1.00
Flyash Carbon Content (%)***	24.9	36.7	59.1	90.0	67.3

*Typical Values.
**Total Hydrocarbons.
***Loss-on-Ignition Method.

TABLE 29. MASS TRAIN DATA, lb/10^6 Btu
No. 6 FUEL OIL

TEST NO.	ASME METHOD (PETC)	EPA METHOD* (WFI)
0818-1	0.03	
0818-2	0.02	
0818-3	0.02	
0819-1	0.03	
0819-2	0.03	
0820-1	0.02	
0820-2	0.04	
0820-3	0.03	
0823-1	0.03	
0823-2	0.03	
0824-1	0.04	
0824-2	0.02	
0826-1	0.03	
0826-2	0.03	
0827-1	0.03	
0827-2	0.03	
0830-1	0.04	
0830-2	0.03	
0831-1	0.03	
0831-2	0.03	
0901-1	0.03	
0901-2	0.03	
0902-1	0.03	
0902-2	0.04	
0903-1	0.03	
0903-2	0.04	

*Not perfomed

TABLE 29. MASS TRAIN DATA, lb/10^6 Btu (Continued)
SRC FUEL

TEST NO.	ASME METHOD (PETC)	EPA METHOD* (WFI)
1024-1	1.11	-
1024-2	1.07	-
1025-1	1.10	-
1025-2	1.26	-
1026-1	1.25	-
1029-1	1.06	1.43
1029-2	0.72	0.92
1101-1	0.85	0.95
1101-2	0.98	0.90
1103-1	0.81	1.00
1104-1	0.77	0.85
1112-1	1.10	-
1112-2	1.28	-
1115-1	0.88	0.92
1115-2	0.69	0.67
1116-1	-	0.67
1116-2	-	0.80
1116-3	-	0.70
1117-1	0.75	0.85
1117-2	0.75	0.98
1118-1	0.73	0.80
1118-2	0.68	0.80
1118-3	0.66	-
1119-1	0.76	0.78
1119-1	-	2.11
1119-2	0.68	0.73
1119-3	0.66	0.71
0127-1	0.87	-
0131-1	0.72	-
0131-2	0.44	-
0201-1	0.79	-
0202-1	0.50	-
0202-2	0.71	-

TABLE 29. MASS TRAIN DATA, lb/10^6 Btu (Continued) SRC RESIDUAL FUEL OIL

TEST NO.	ASME METHOD (PETC)	EPA METHOD* (WFI)
1207-1	0.13	-
1207-2	0.13	-
1208	0.24	0.28
1208-2	0.23	0.26
1209-1	-	0.22
1209-2	-	0.16
1210-1	0.13	0.15
1210-2	-	0.19
1213-1	0.11	0.13
1213-2	0.09	0.13
1214-1	0.17	0.23
1214-2	0.17	0.21
1214-2	-	0.21
1215-1	0.14	0.19
1215-2	0.15	0.15
1215-2	-	0.18
1215-3	0.24	0.31
1216-1	0.18	0.24
1216-2	0.20	0.22
1216-2	-	0.11
1216-3	0.09	-
1217-1	0.17	0.18
1217-1	0.18	0.20
1217-2	-	0.20

TABLE 29. MASS TRAIN DATA, lb/10^6 Btu (Continued)
SRC RESIDUAL FUEL OIL

TEST NO.	ASME METHOD (PETC)	EPA METHOD* (WFI)
0105-1	-	0.87
0106-1	0.92	0.85
0106-2	1.15	-
0107-1	0.86	0.88
0107-1	-	1.12
0107-2	0.88	0.89
0110-1	1.04	1.16
0110-2	0.95	0.92
0111-1	1.00	0.85
0111-2	1.00	1.04
0112-1	0.86	0.91
0112-2	0.77	0.77
0113-1	0.74	0.73
0113-2	0.78	0.79
0114-1	0.79	0.93
0114-2	0.90	0.92

VI. REFERENCES

1. Pan, Y.S., Wieczenski, D.E., Snedden, R.B., Bellas, G.T., Joubert, J.I., Curio, A.R., Wildman, D.J., "Final Test Report on the Combustion of Solvent-Refined Coal in a 100-hp Firetube Boiler." DOE/PETC/TR-82/5 (DE82007670), Pittsburgh Energy Technology Center, Pittsburgh, PA, February 1982.

2. Sage, W.L., "Combustion Tests on a Specially Processed Low-Ash, Low-Sulphur Coal." Research Report No. 4439. The Babcock and Wilcox Company Research Center, Alliance, OH, July 1964.

3. McCann, C.R., J.J. Demeter, and D. Bienstock, "Combustion of Pulverized, Solvent-Refined Coal." Presented at the Spring Meeting of the Combustion Institute's Central States Section, at Battelle-Columbus, Columbus, OH, April 5-6, 1976.

4. Combustion Engineering, Inc., "Solvent Refined Coal Evaluation: Pulverization, Storage, and Combustion." Research Project 1235-2b. Technical Report 2. EPRI, Palo Alto, CA, June 1976.

5. The Babcock and Wilcox Company, "Characteristics of Solvent Refined Coal: Dual Register Burner Tests." Project 1235-5 Final Report, EPRI, Palo Alto, CA, January 1978.

6. Southern Company Services, Inc., "Solvent Refined Coal Burn Test." Final Report, Birmingham, AL, July 1979.

7. *ASME Power Tests Codes* - *Steam Generating Units*, ASME PTC 4.1. American Society of Mechanical Engineers, 1964.

8. *ASME Power Test Codes* - *Determining Dust Concentration in a Gas Stream*, ASME PTC 27-1957 American Society of Mechanical Engineers, 1957.

9. North American Manufacturing Co., *North American Combustion Handbook*, Second Edition, Cleveland, OH, 1978.

10. Federal Register, Vol. 42, No. 160 - Thursday, August 18, 1977.

11. Acurex Corporation, *Solvent-Refined Coal (SRC) Combustion Demonstration Support Program -- Executive Summary*, April, 1983.

SECTION VII.

APPENDIXES

APPENDIX A

A. 700 hp COMBUSTION TEST FACILITY

A.1 700 hp Boiler

The primary component of the Combustion Test Facility (CTF) is the 700 hp, two-drum, "D" type package, watertube, industrial boiler designed for oil firing. A horizontal cross-sectional plan view of the boiler is shown in Figure 3. The boiler was manufactured by the Nebraska Boiler Company and, at full capacity, generates 24,000 pounds of saturated steam per hour at 175 psig, with a heat liberation rate of 47,100 Btu/ft^3-hr. The boiler has the following design and operating specifications:

Boiler ID: Watertube "D" - NS-B-40
Convection Heating Surface: 1956 sq ft
Radiant Heating Surface: 518 sq ft
Furnace Size: 6.3 ft W x 13.3 ft L x 7.4 ft H
Design Steam Capacity: 24,000 lb/hr
Design Pressure: 250 psig
Operating Pressure: 175 psig
Feedwater Supply Temperature: 227^{o}F
Sootblower: One Boyer Type VH valve-in-head
Design No. 6 Fuel Oil Consumption: 30 x 10^6 Btu/hr
Design No. 6 Fuel Oil Excess Air: 12.5 percent

A.2 Flue-Gas Pulse-Jet Baghouse

Particulates are filtered by an American Air Filter reverse air fabric pulse-jet baghouse and the flue gas exits the stack through an induced draft fan. For high sulfur fuels, a flue-gas desulfurization system is provided in the flue-gas duct, upstream of the baghouse. To reduce the SO_2 emissions to an acceptable level, the SO_2 is reacted with a dry sorbent, sodium bicarbonate, to produce sodium sulfate, which is collected on the filter bags along with the flyash. The flue-gas desulfurization system was not used during this program. The baghouse contains 120 Huyglas filter fabric bags manufactured by Huyck Felt, Division of Huyck Corporation. The bags are arrayed in 10 rows of 12 bags. The bags are 5-1/4 inches in diameter by 11 feet 9 inches long, providing total cloth area of 1979 square feet. They are 100 percent fiberglass needle felt fiber that can continuously operate at 500°F and can allow for surges up to 550°F. These filter bags have a unique resin system which coats and protects the fiberglass from abrasive and corrosive environments, lubricating the glass fibers and preventing the fiber-to-fiber abrasion to which constantly flexing filter bags are subject in pulse-jet filter systems. The bags are cleaned using a pulse of clean air. Two air header manifolds, one on each side of the unit, provide the pulsing air. Each header manifold is 79 inches long by 6 inches high. The pulse pressure was maintained at 75 psig. The frequency of pulsing was determined such that the pressure drop across the filter was maintained between 2 inches and 4 inches H_2O.

B. FACILITY MODIFICATIONS FOR SOLVENT REFINED COAL - PHASE II

B.1 Flue-Gas Duct Design

As mentioned earlier in Section II, the test plan called for the installation of a mobile Electrostatic Precipitator (ESP) for particulate collection. The ESP was supplied, installed and operated by WFI. It was designed to be operated using approximately 5000 acfm of flue gas, which is approximately one-half of the 700 hp boiler full load output.

ICRC, Southern Company Services (SCS) and MATSCO/GE worked together to design a ducting system that would properly split the flue gas. A "Y" type "flow splitter" (Figure 5) with 20-inch diameter inlet and two 16-inch diameter outlets was designed by SCS. It was installed in the flue-gas duct downstream of the flue-gas cooler. The existing 16-inch diameter ducts each had manual flow control valves. The flow was measured by using a manometer across the splitter and also a flow orifice near the ESP inlet, and also by a pilot tube traverse across the flue-gas duct by isokinetic technicians. A minimum of eight pipe diameters upstream and two downstream of the splitter were used as design parameters to help achieve even flow and particulate distribution. The flow velocity was a nominal 60 fps in each 16-inch diameter duct.

In addition, a bypass duct was installed around the baghouse to facilitate testing. All of the duct was insulated and made of 304 stainless steel to resist corrosion.

SUB-SECTION C

FIGURES

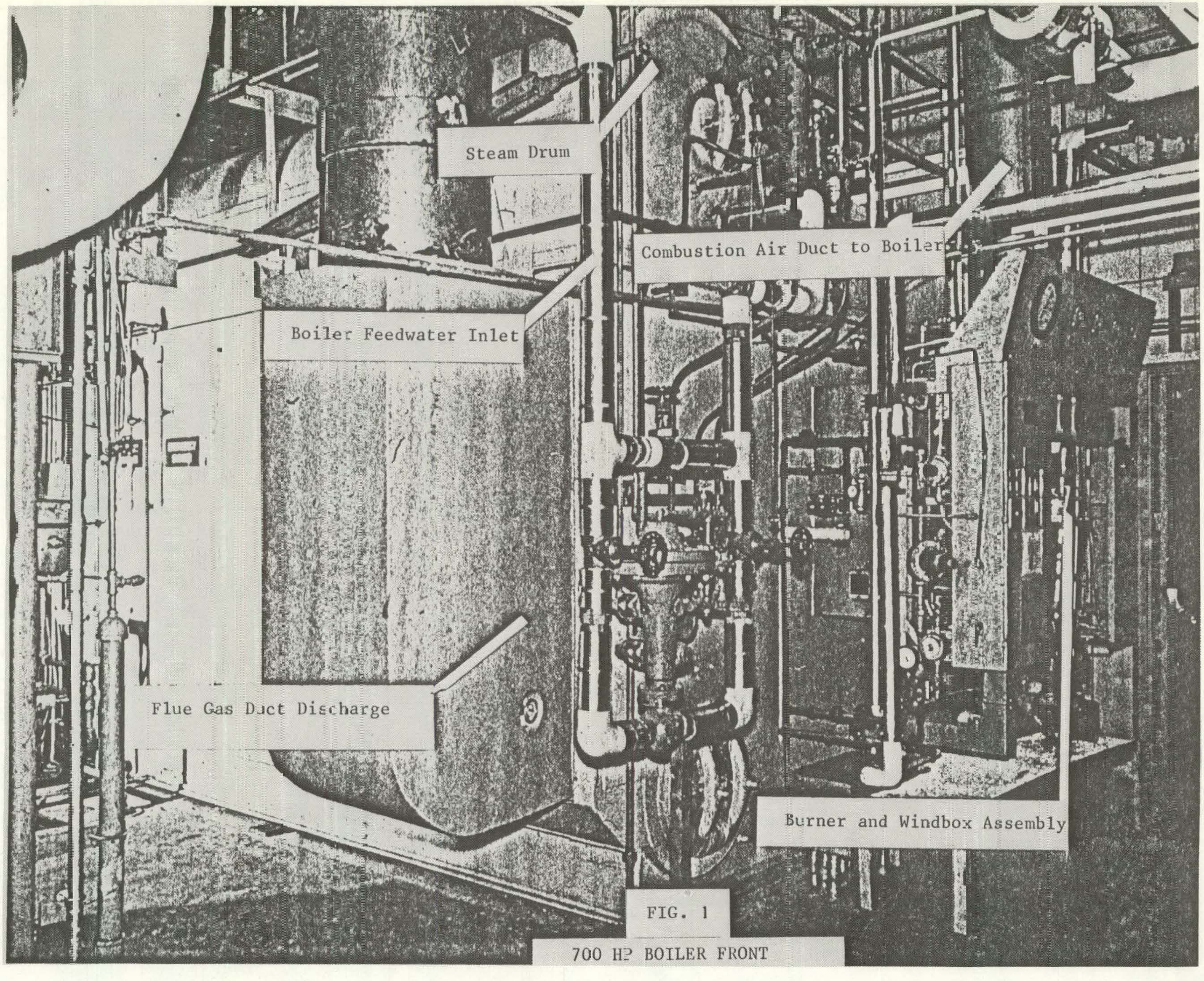

FIG. 1

700 HP BOILER FRONT

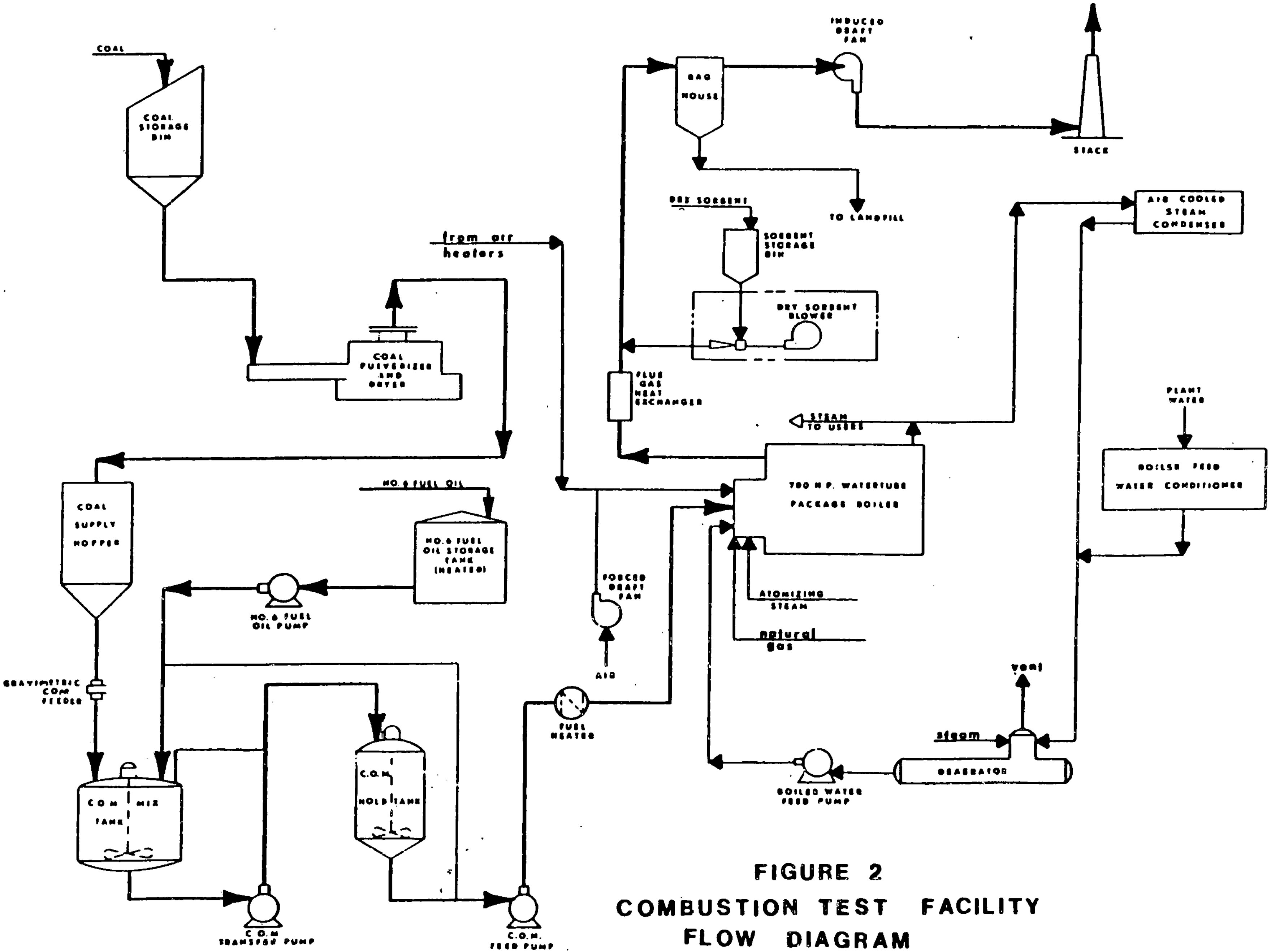

FIGURE 2
COMBUSTION TEST FACILITY
FLOW DIAGRAM

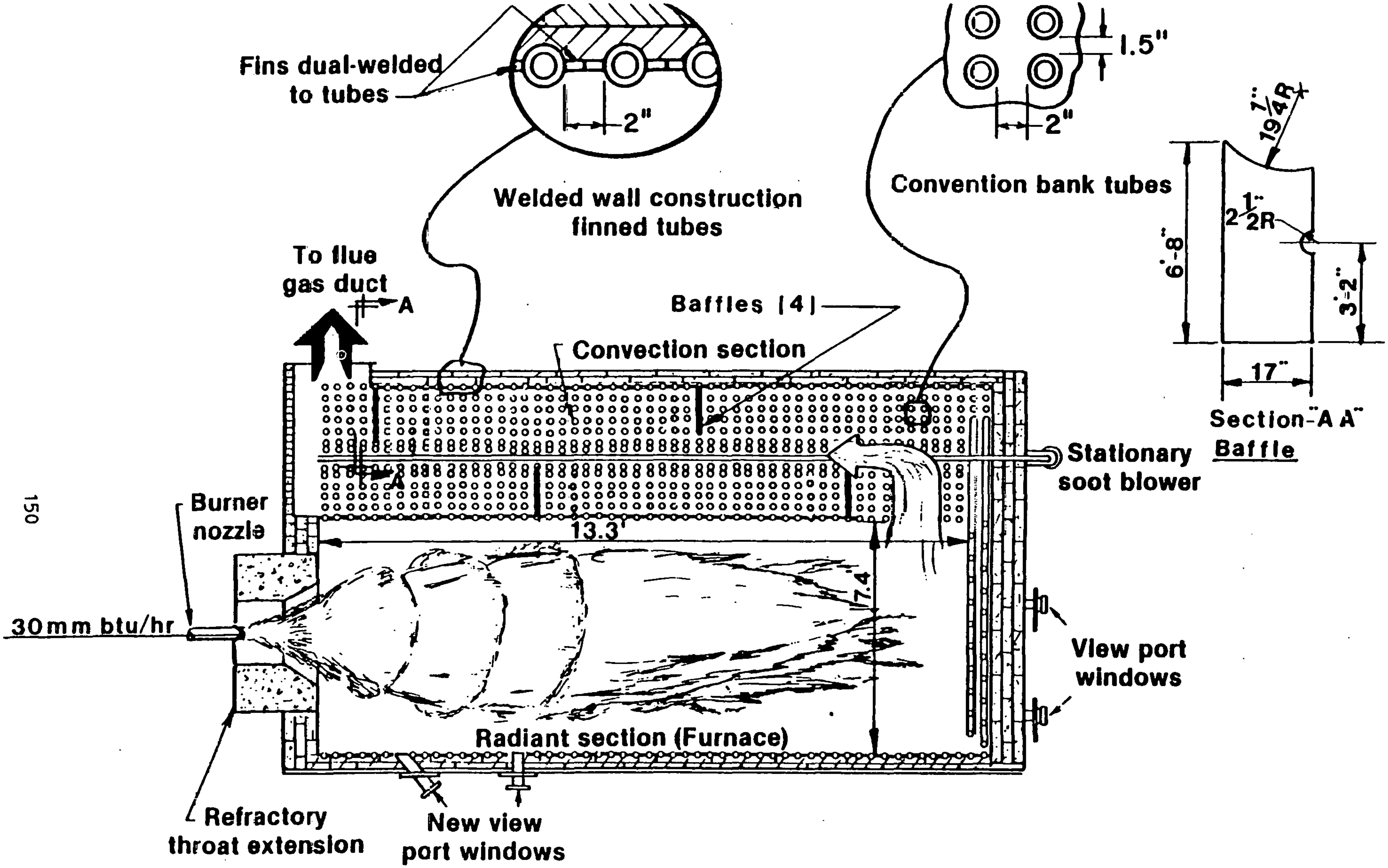

Figure 3 Sectional Plan 700 HP Watertube Boiler

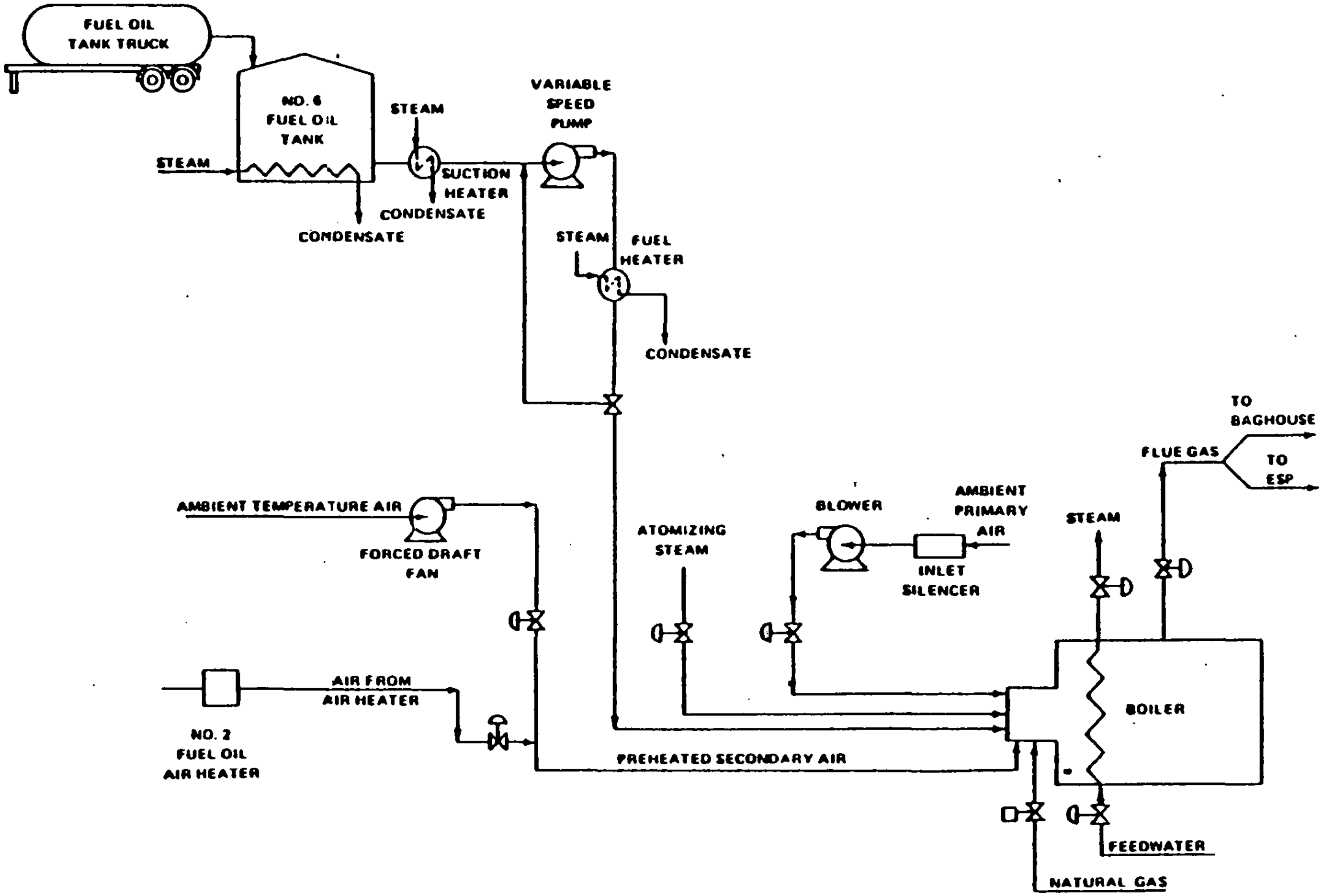

FIGURE 4A
N° 6 FUEL OIL FLOW DIAGRAM

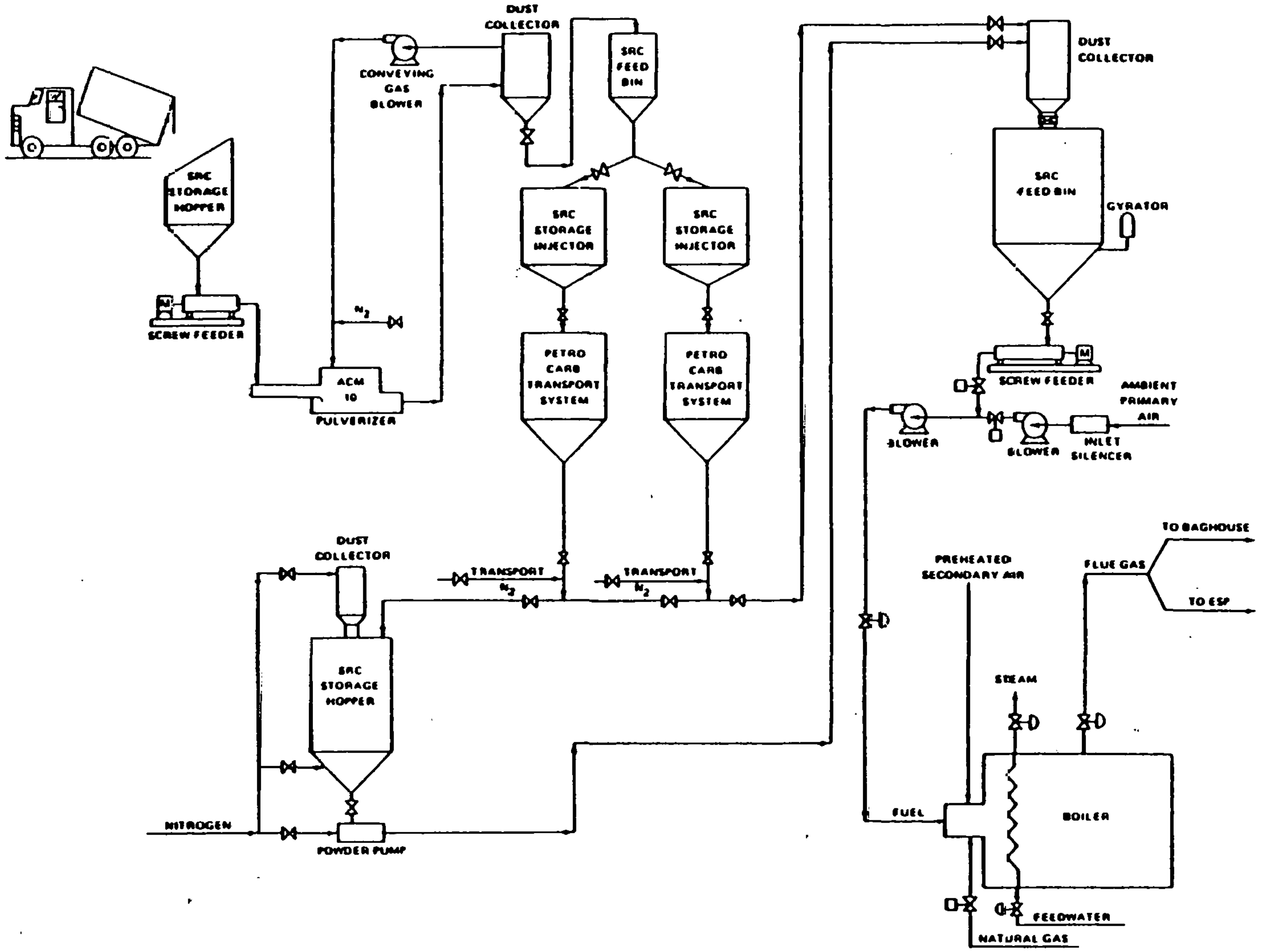

FIGURE 4B

SRC FUEL FLOW DIAGRAM

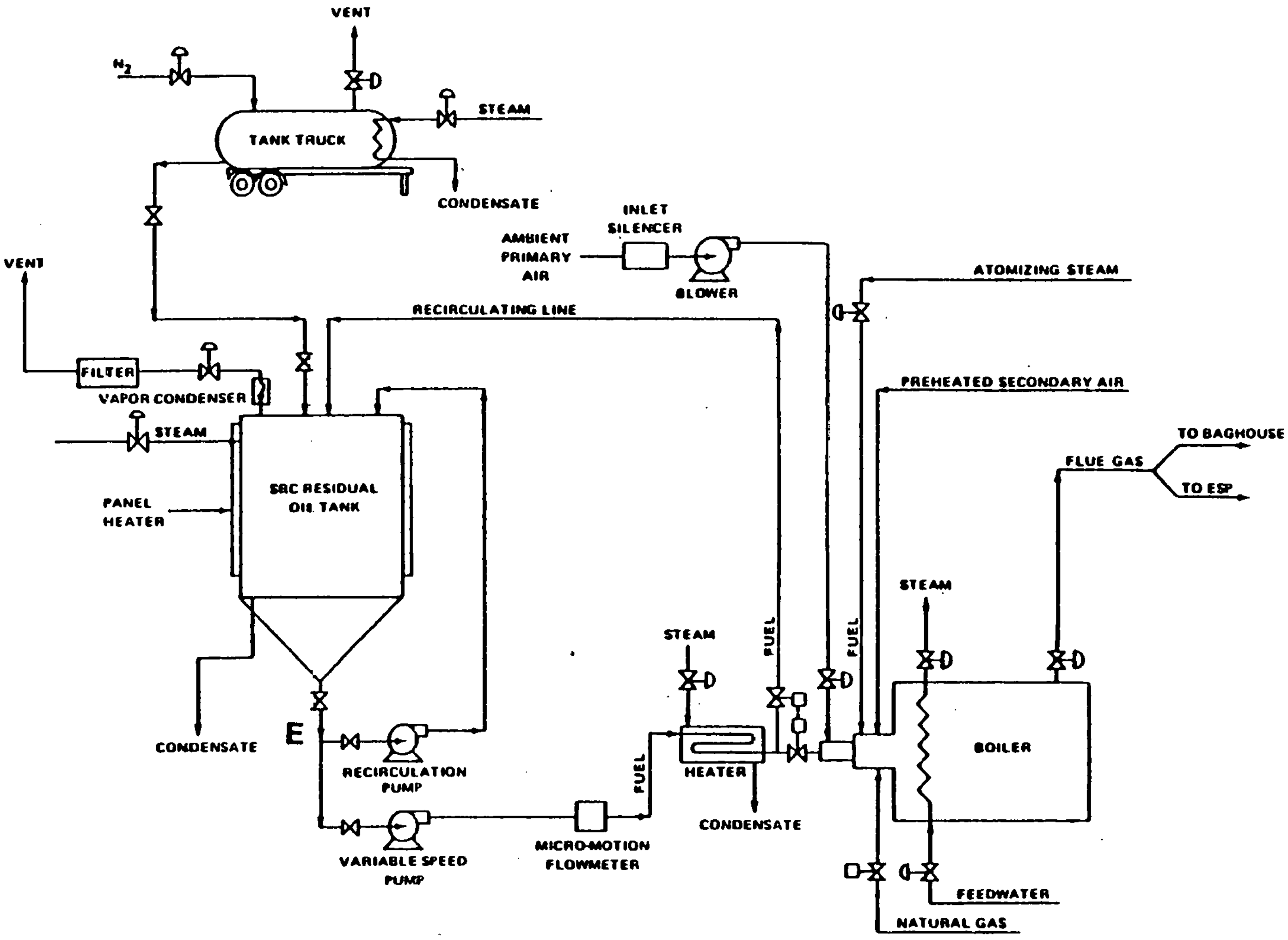

FIGURE 4C

SRC RESIDUAL FUEL OIL FLOW DIAGRAM

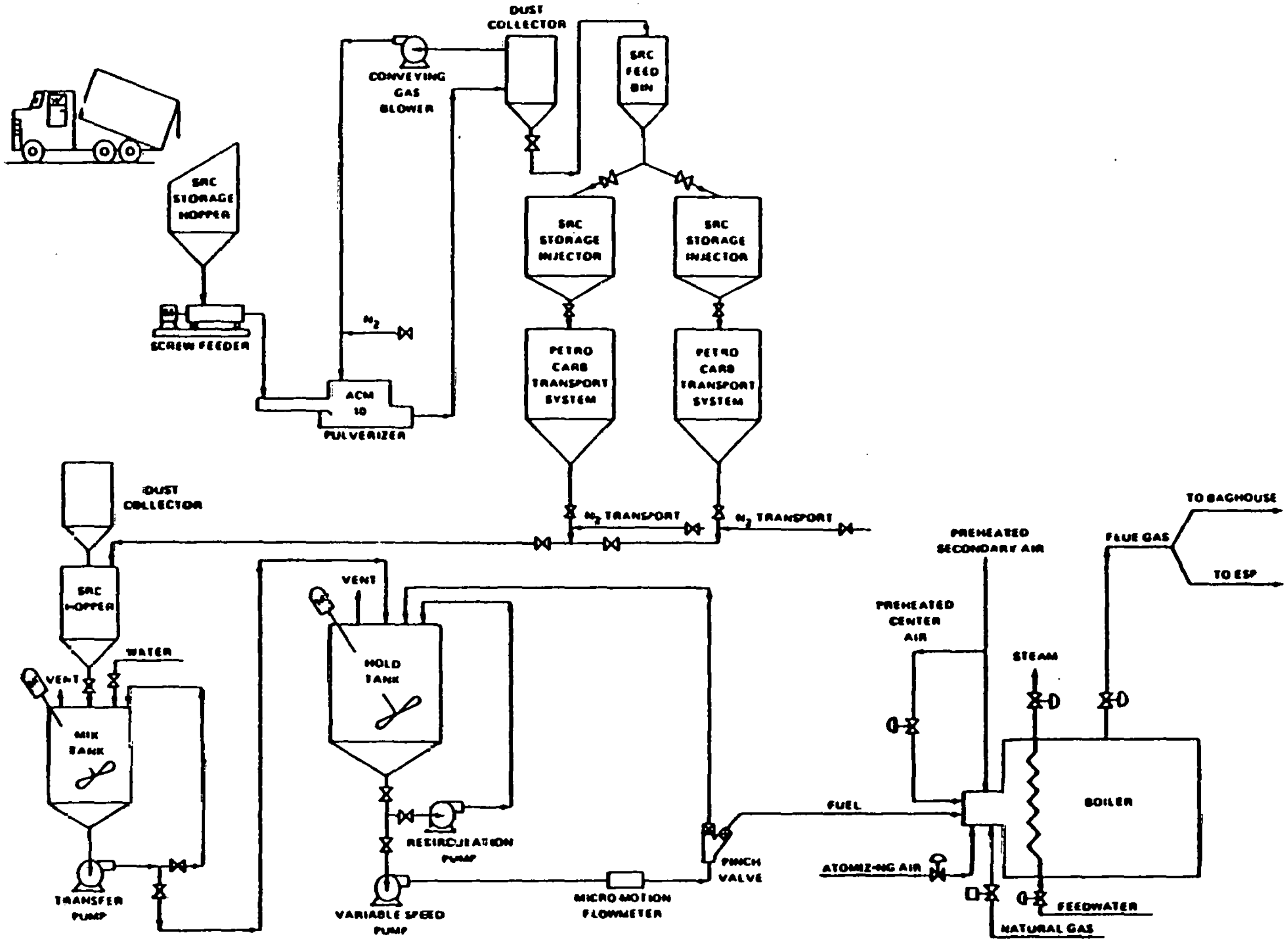

FIGURE 4D
SRC/ WATER SLURRY FLOW DIAGRAM

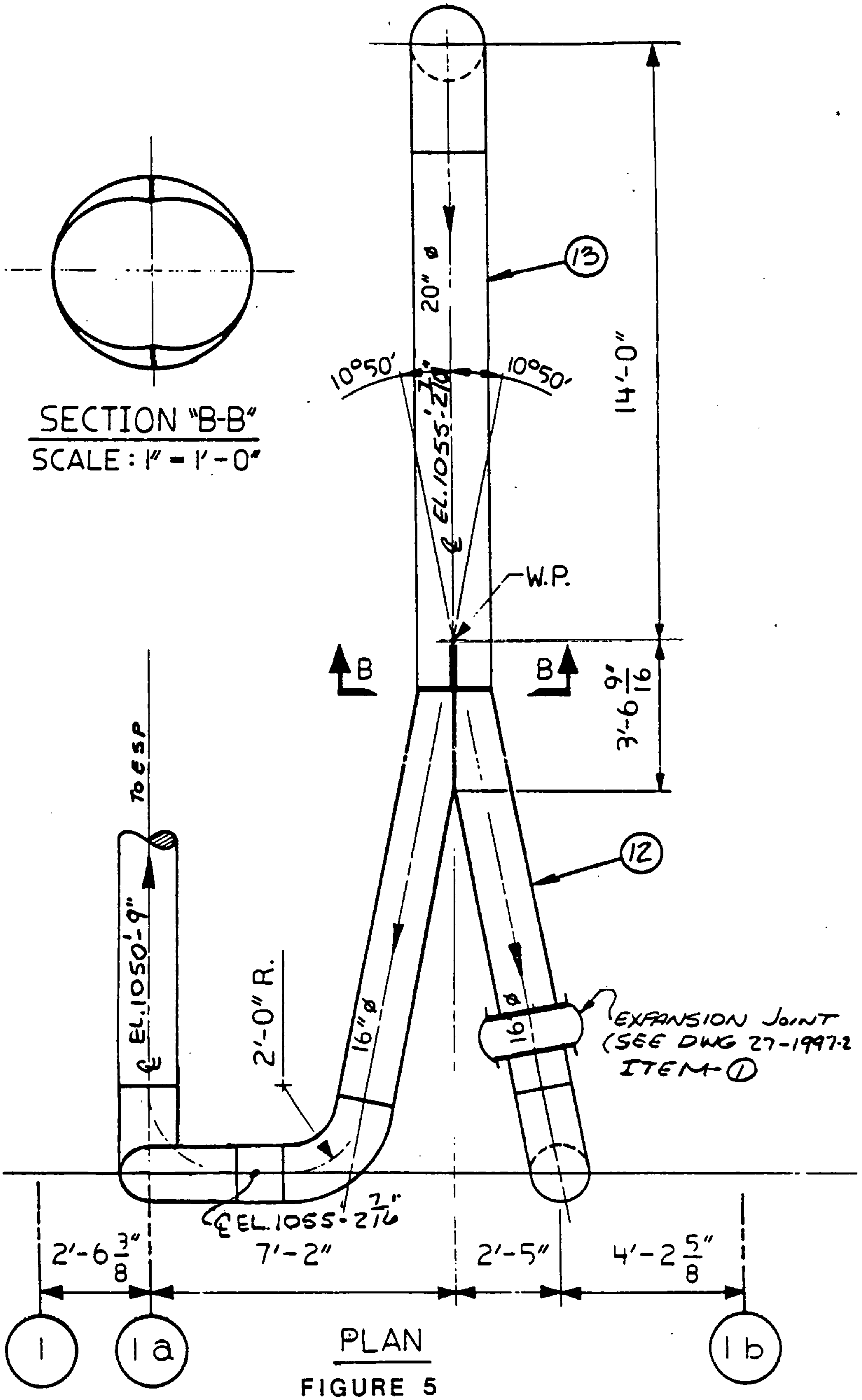

SECTION "B-B"
SCALE: 1" = 1'-0"

PLAN

FIGURE 5
FLOW SPLITTER

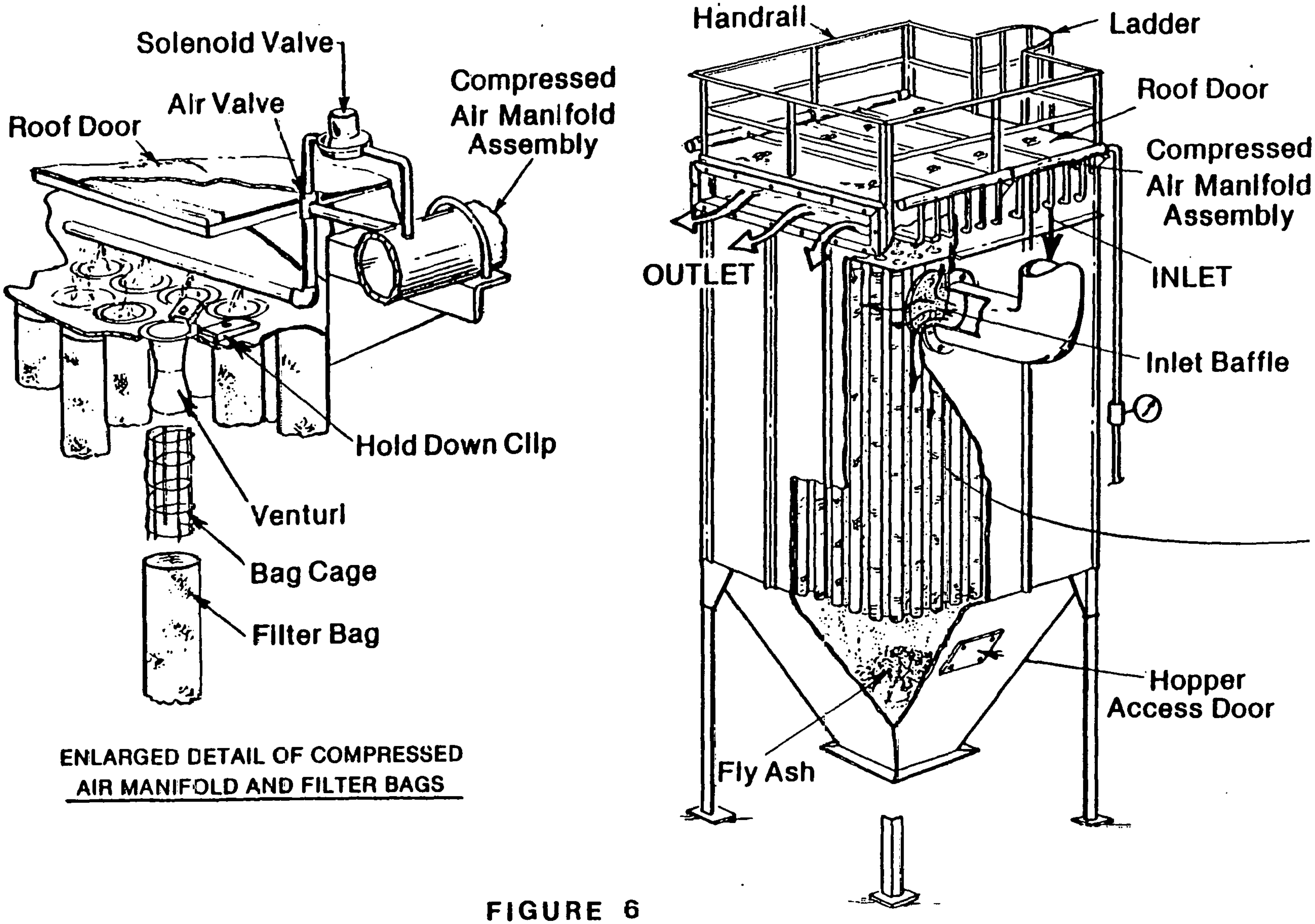

ENLARGED DETAIL OF COMPRESSED AIR MANIFOLD AND FILTER BAGS

FIGURE 6

700 HP BOILER BAGHOUSE

Manufactured by American Air Filter Fabri-Pulse Size: 12-120-1924

MOUNTING DIMENSIONS

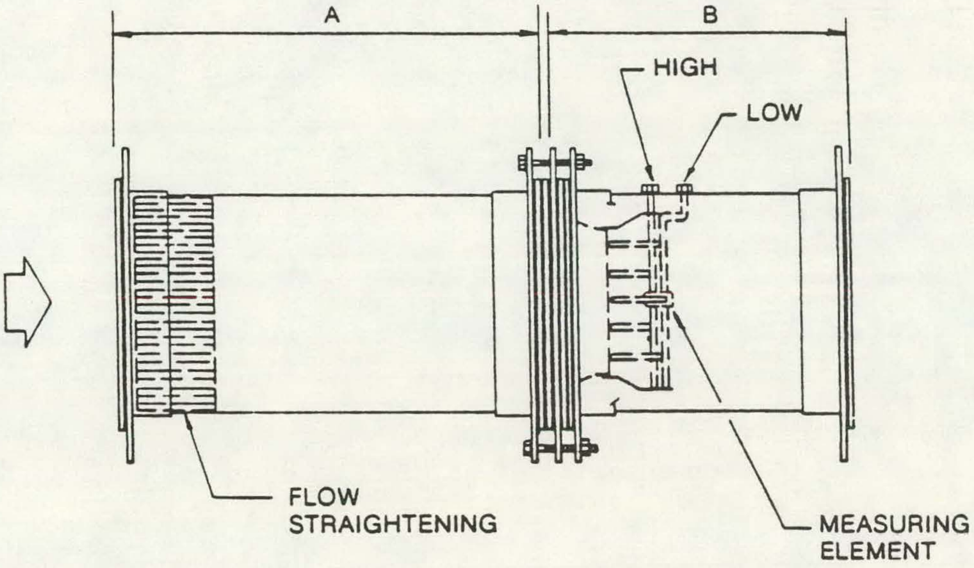

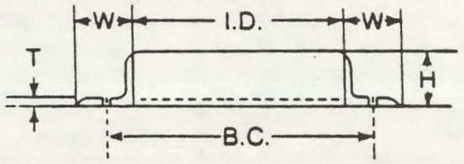

STANDARD FLANGES FOR 10NZP1000

NOMINAL PIPE SIZE	INSIDE DIAMETER	H	W	T	BOLT HOLE CENTERS	NO. OF BOLT HOLES	SIZE OF BOLT HOLES
6 inch	6 3/32	1	1	10GA	7 5/16	6	9/32
8 inch	8 1/8	1	1 1/8	10GA	9 9/16	6	3/8
10 inch	10 1/8	1 1/4	1 3/8	10GA	11 13/16	6	7/16
12 inch	12 1/8	1 1/4	1 1/2	10GA	14	8	7/16

* All dimensions in inches

FIGURE 7

BRANDT FLOW METER

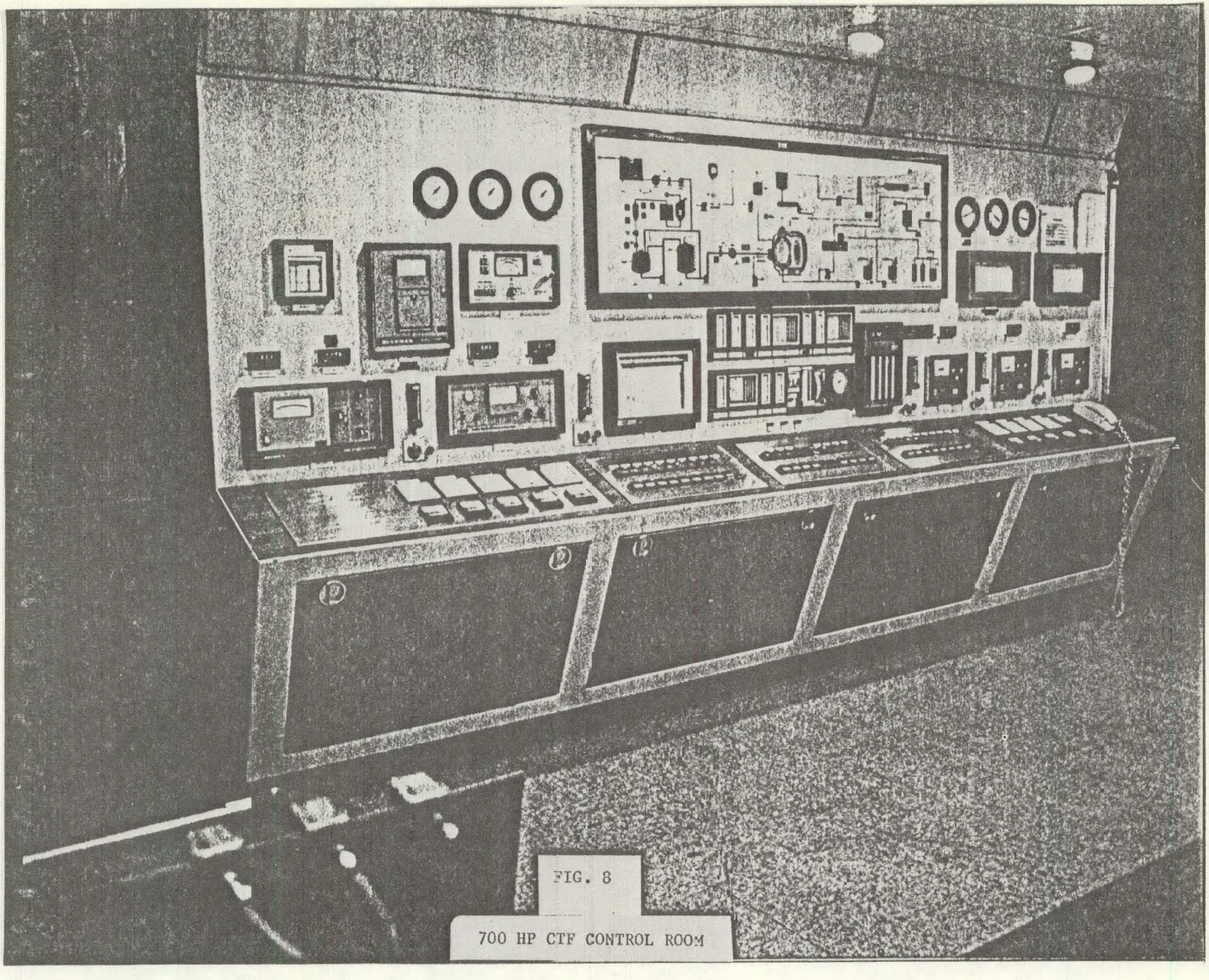

FIG. 8

700 HP CTF CONTROL ROOM

Fuel	d	d_1	d_2	d_3	d_4	d_5	L	θ
SRC/Water	15/64	.191	.120	.205	.205	7/8	5/32	60°
#6 Oil	5/32	.149	.059	.111	.159	1/2	.096	75°
SRC Residual	5/32	.152	.093	.154	.201	11/16	.099	75°

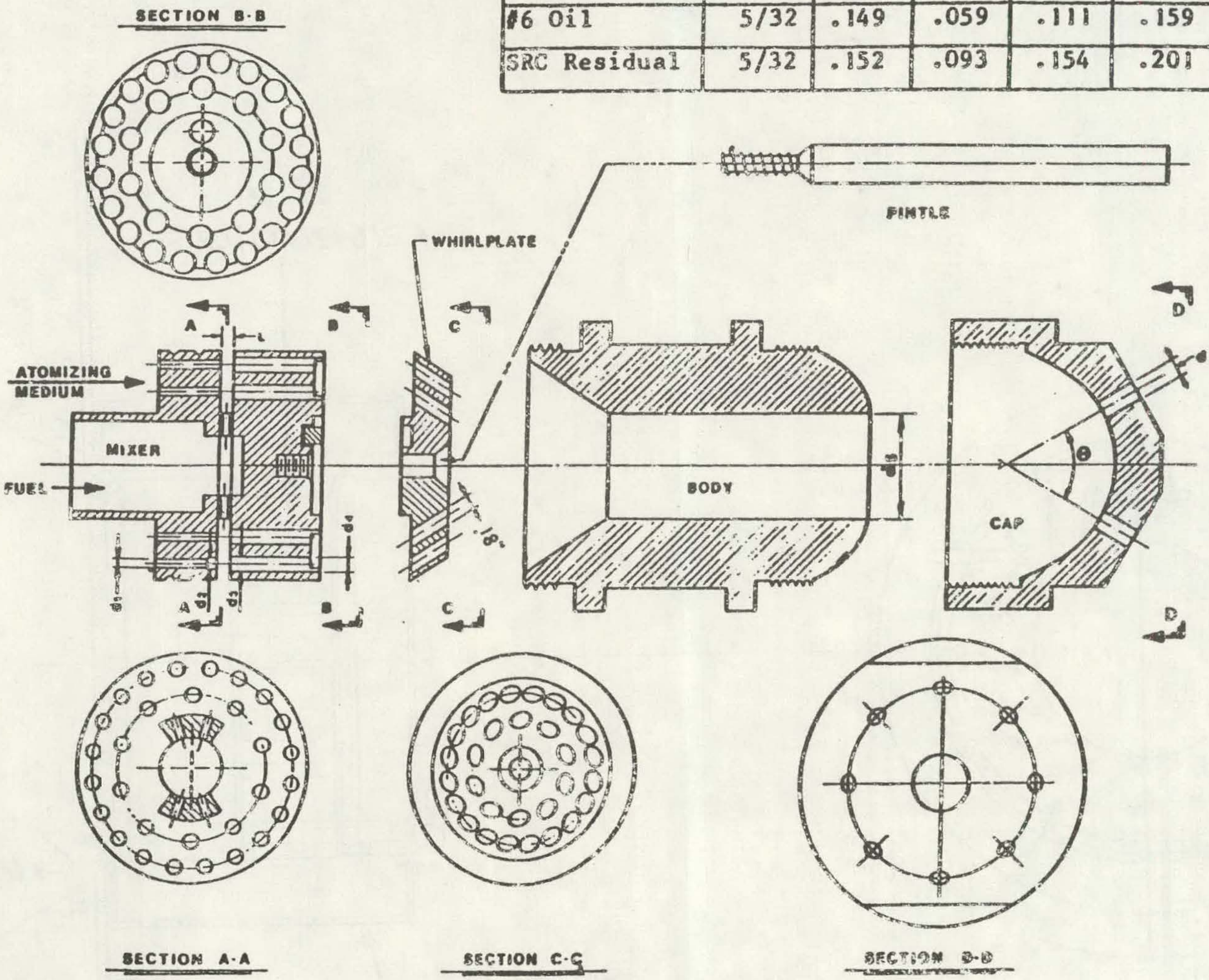

FIGURE 9
COEN COMPANY Nº 2 mV OIL
ATOMIZER ASSEMBLY

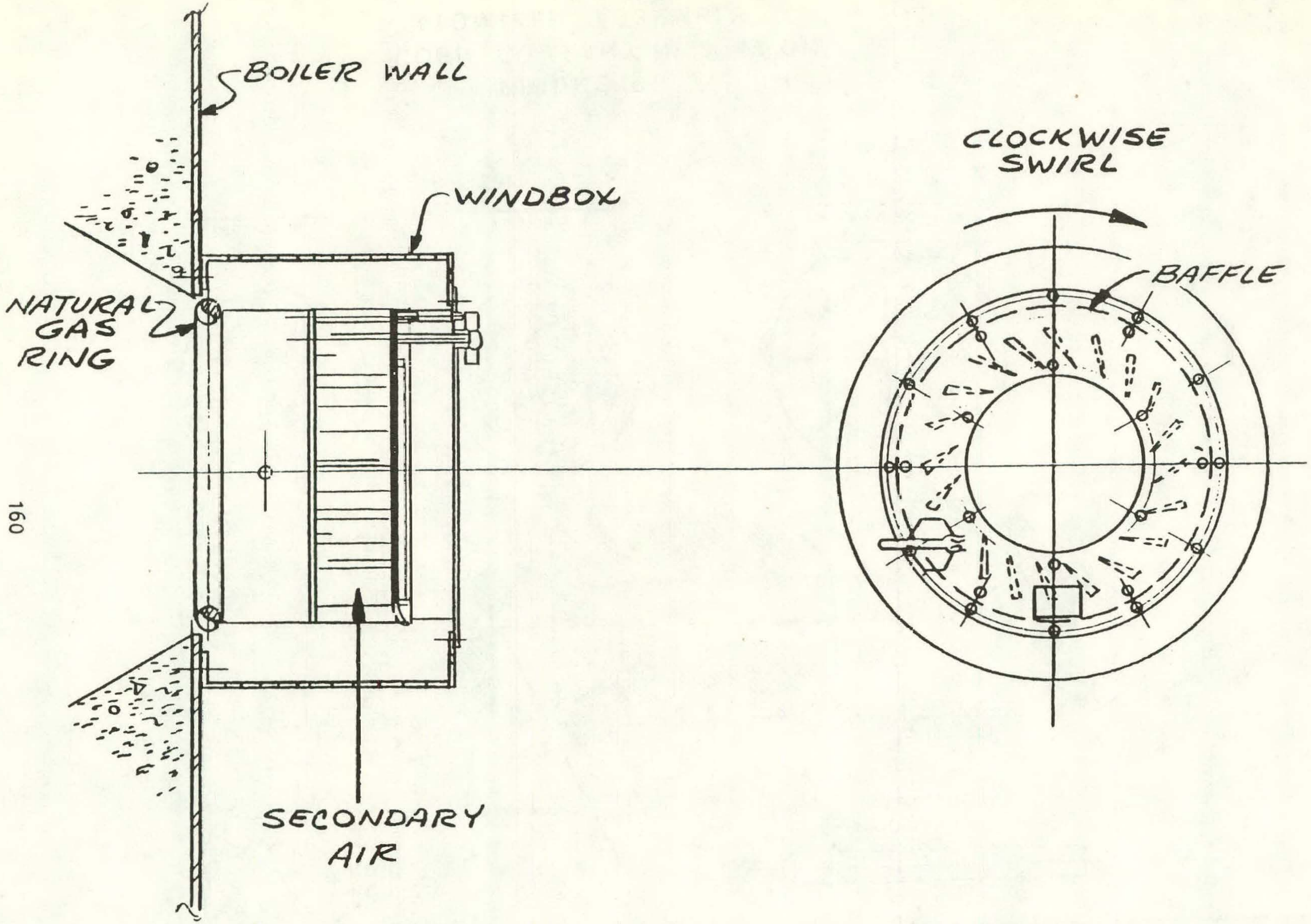

FIGURE 10
SINGLE AIR ZONE REGISTER

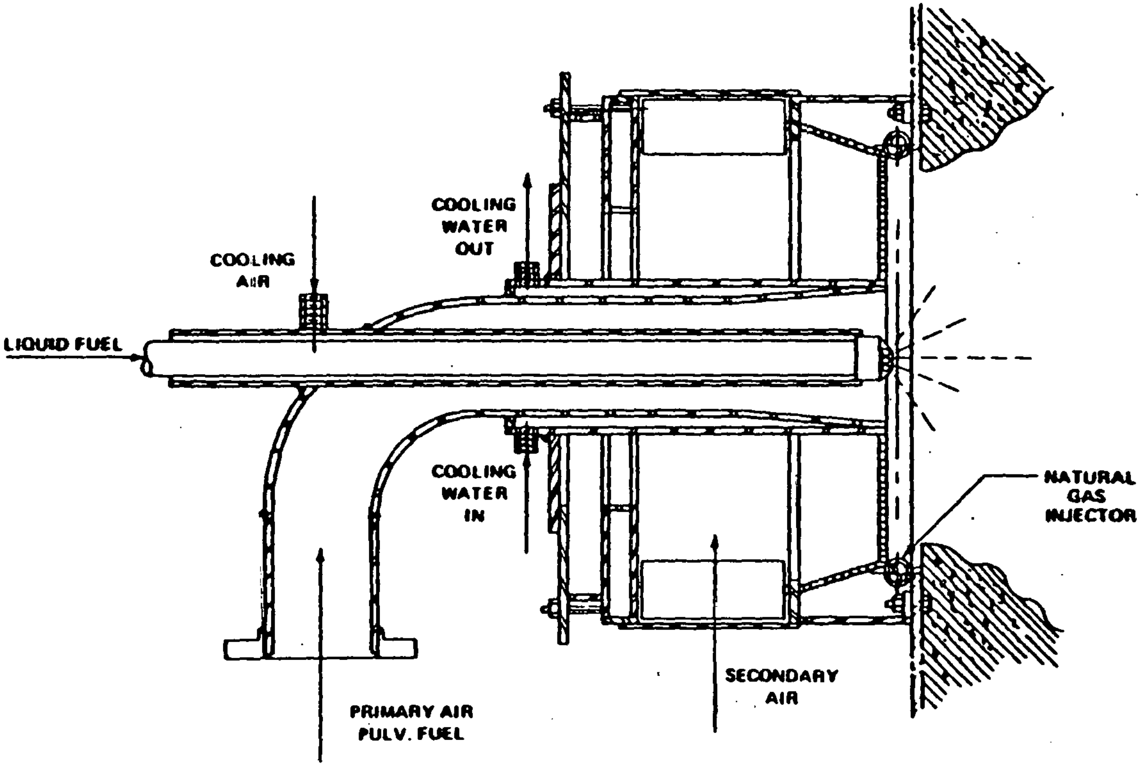

FIGURE 11-A
ORIGINAL SLOW MIX BURNER

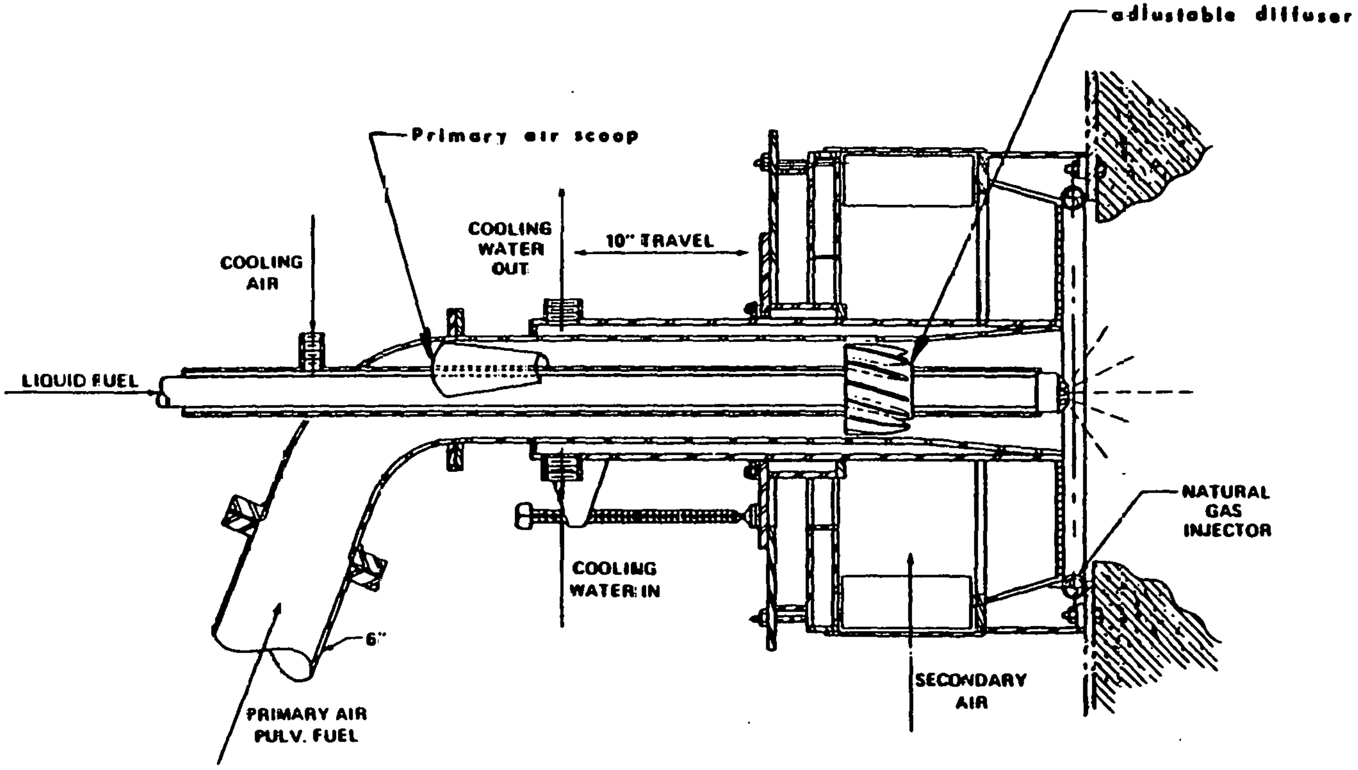

FIGURE 11-B
MODIFIED SLOW MIX BURNER

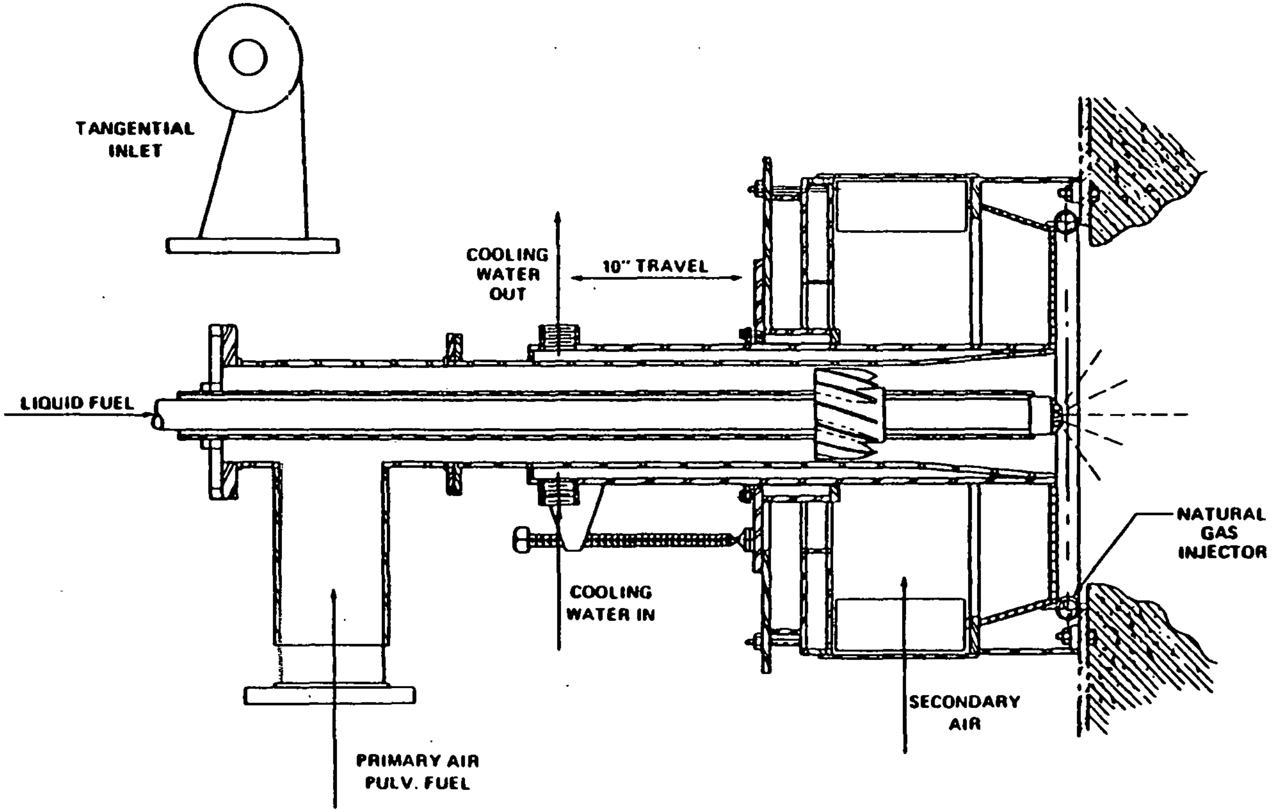

FIGURE 11-C
TANGENTIAL ELBOW WITH SLOW MIX BURNER

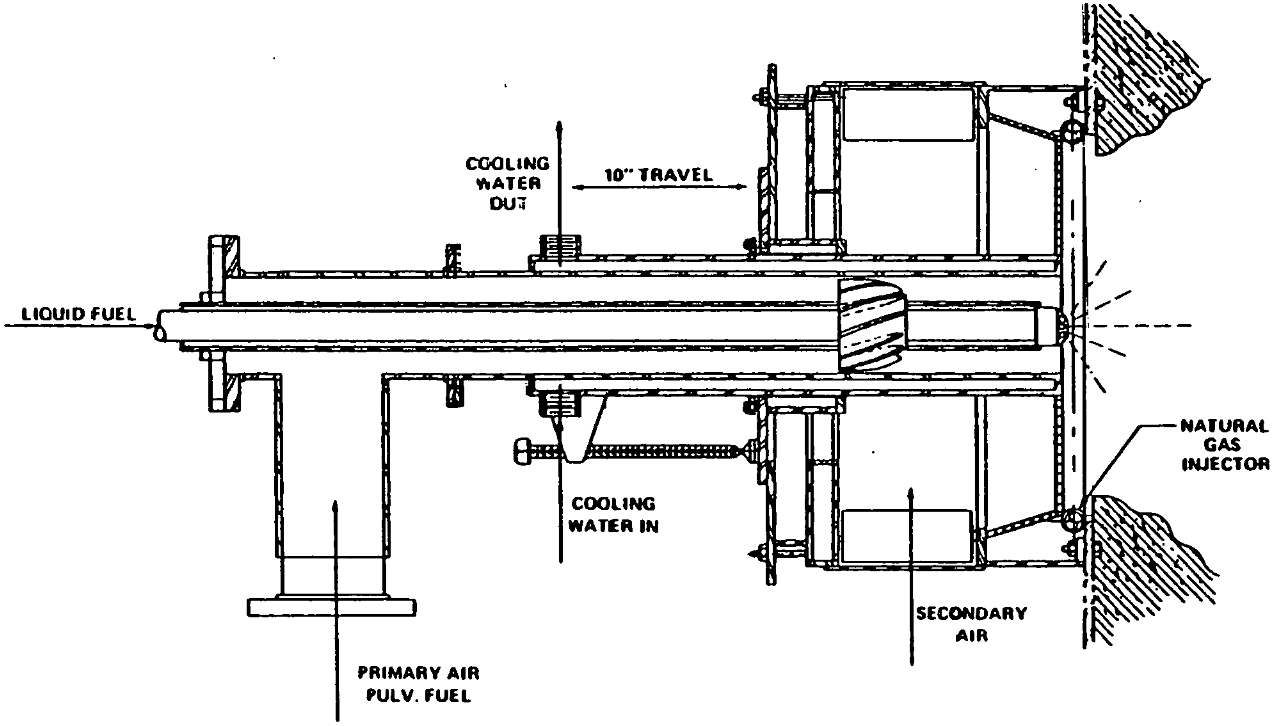

FIGURE 11-D
SIX-INCH ECONO BURNER

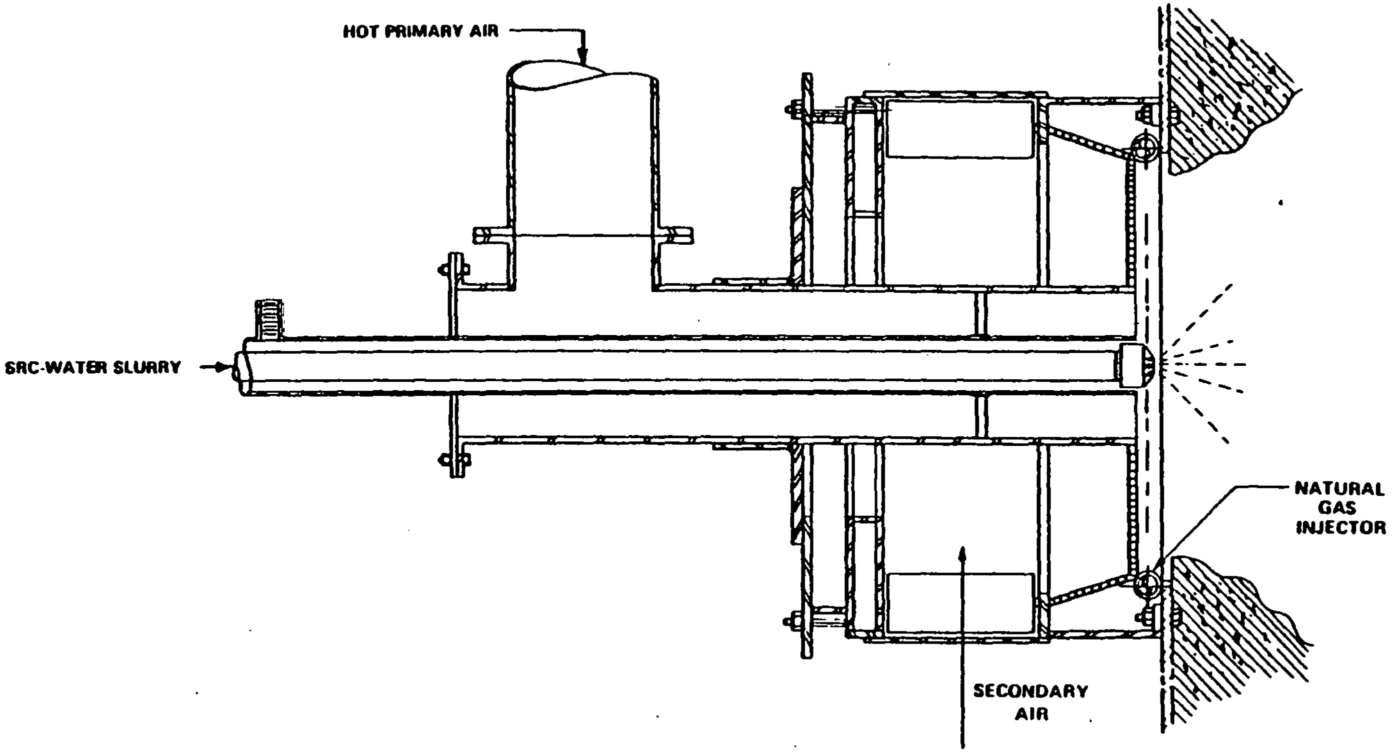

FIGURE 11-E
SRC/ WATER SLURRY SUPPLY
BURNER

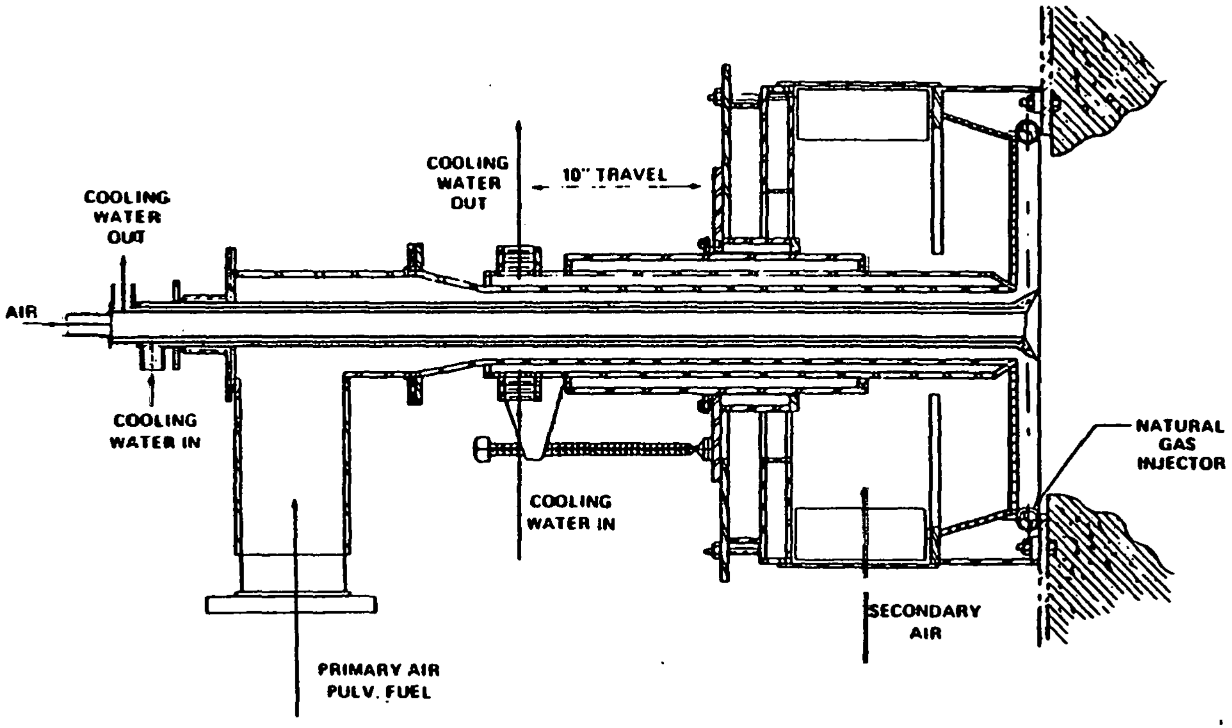

FIGURE 11-F
PETC FAST MIX BURNER

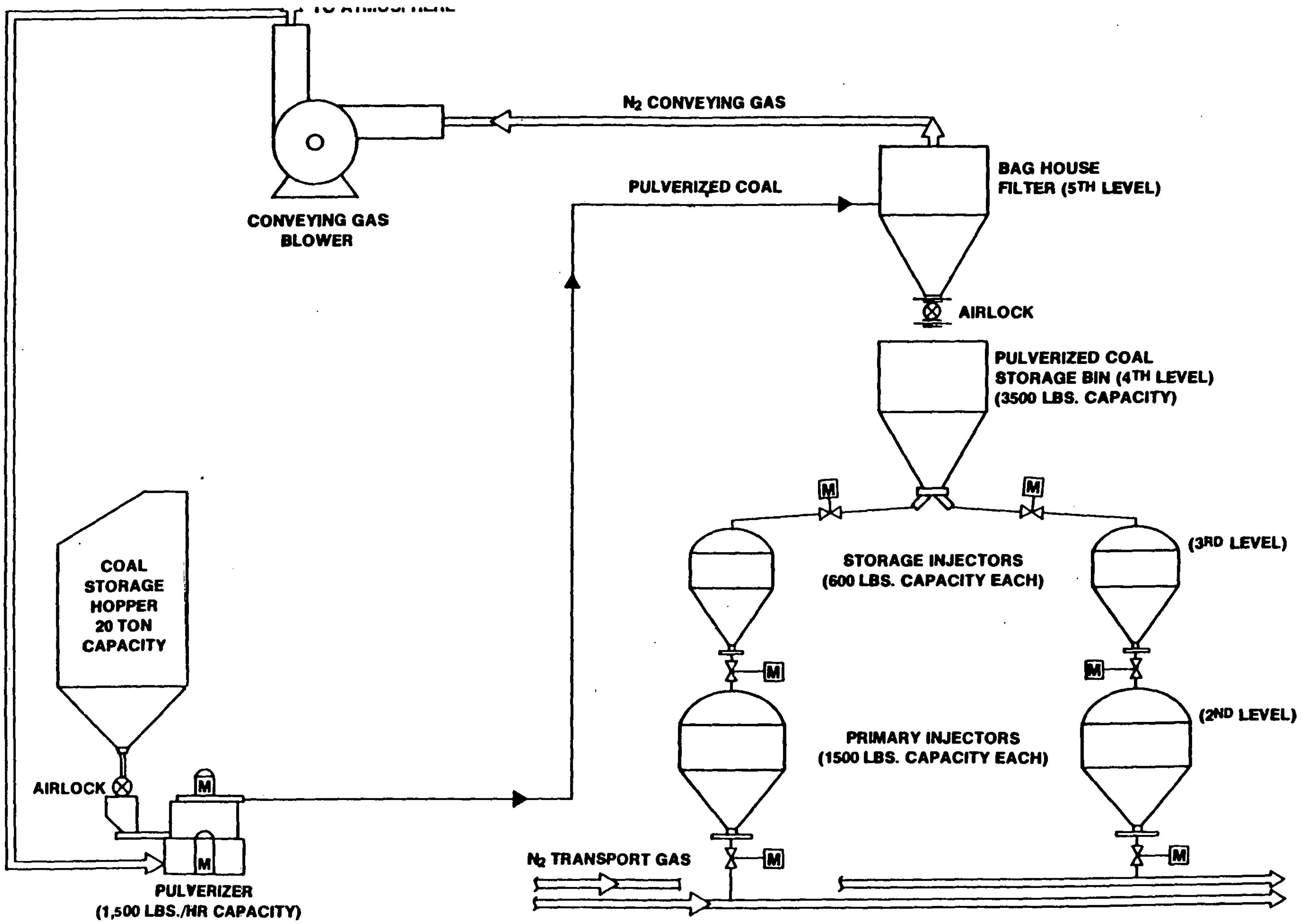

FIGURE 12
PETROCARB FLOW DIAGRAM

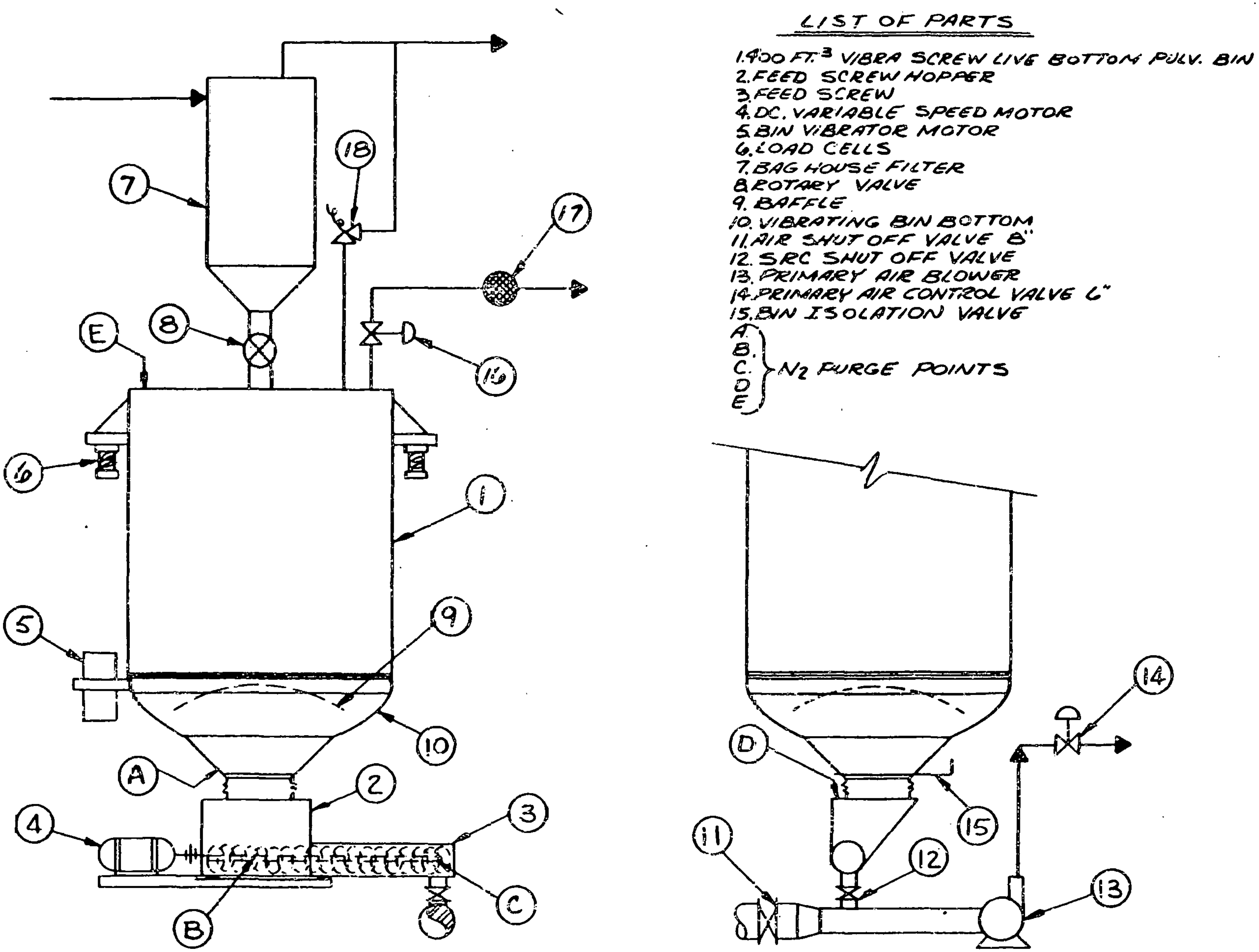

FIGURE 13
VIBRASCREW BIN ARRANGEMENT

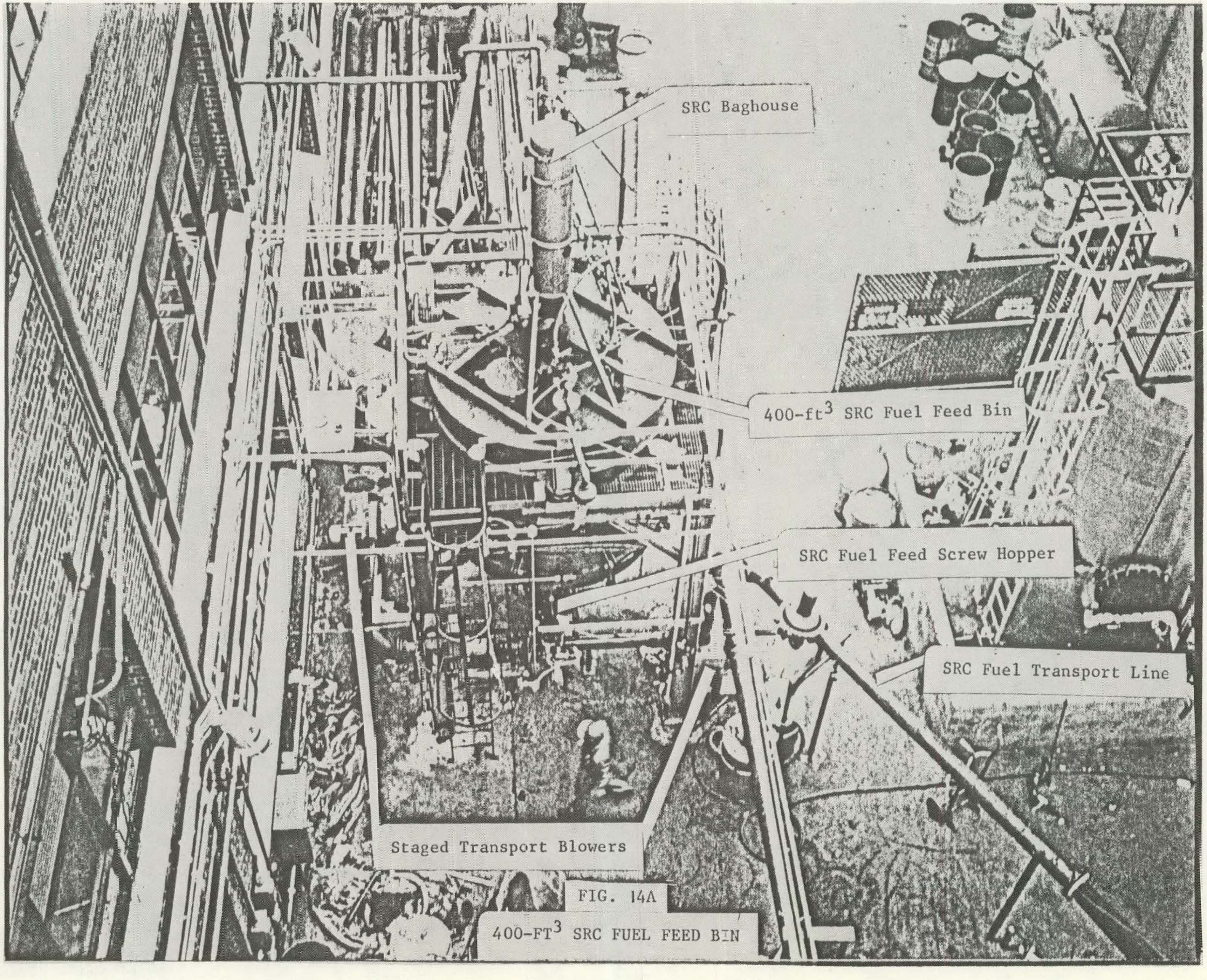

FIG. 14A

400-FT^3 SRC FUEL FEED BIN

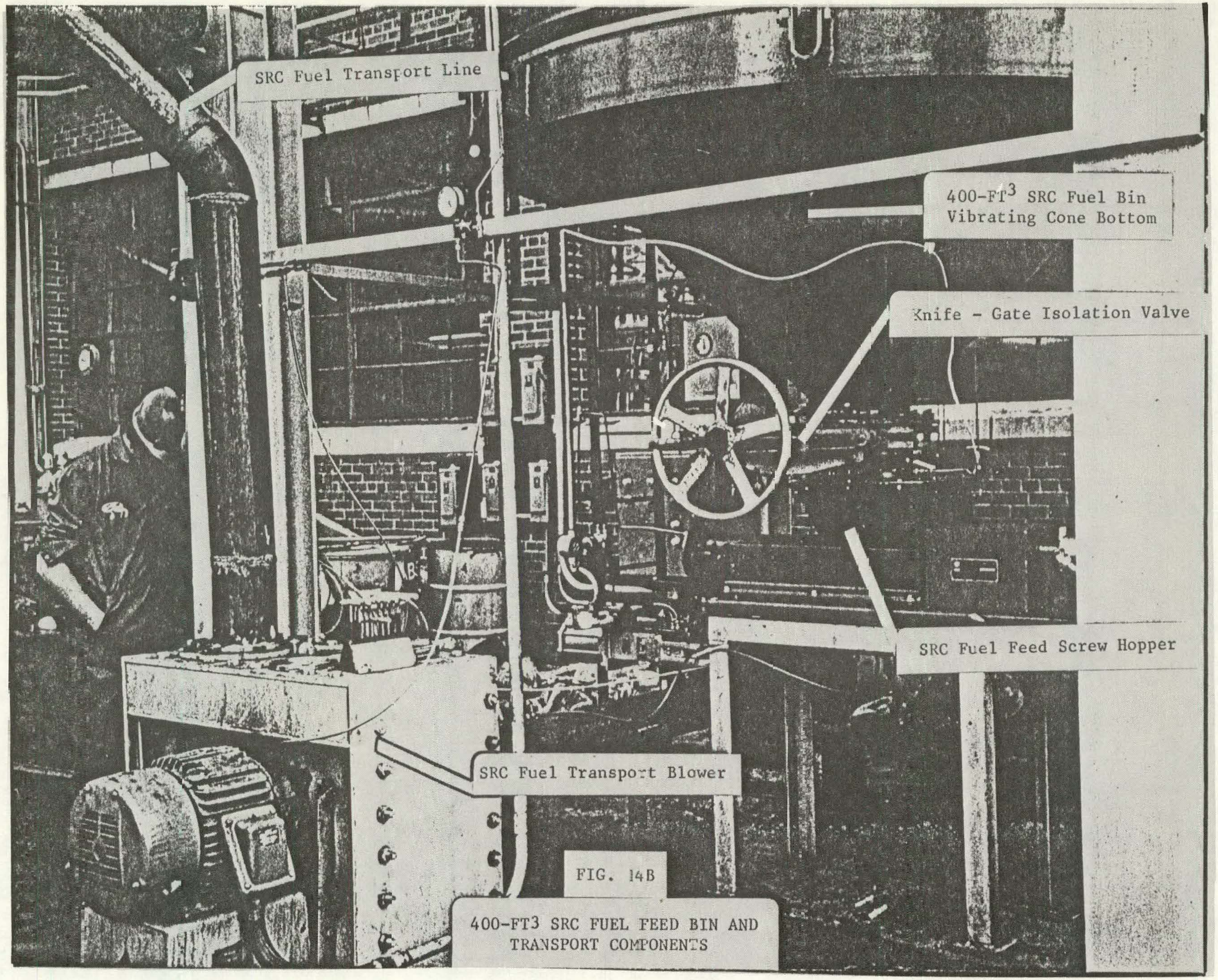

FIG. 14B

400-FT3 SRC FUEL FEED BIN AND TRANSPORT COMPONENTS

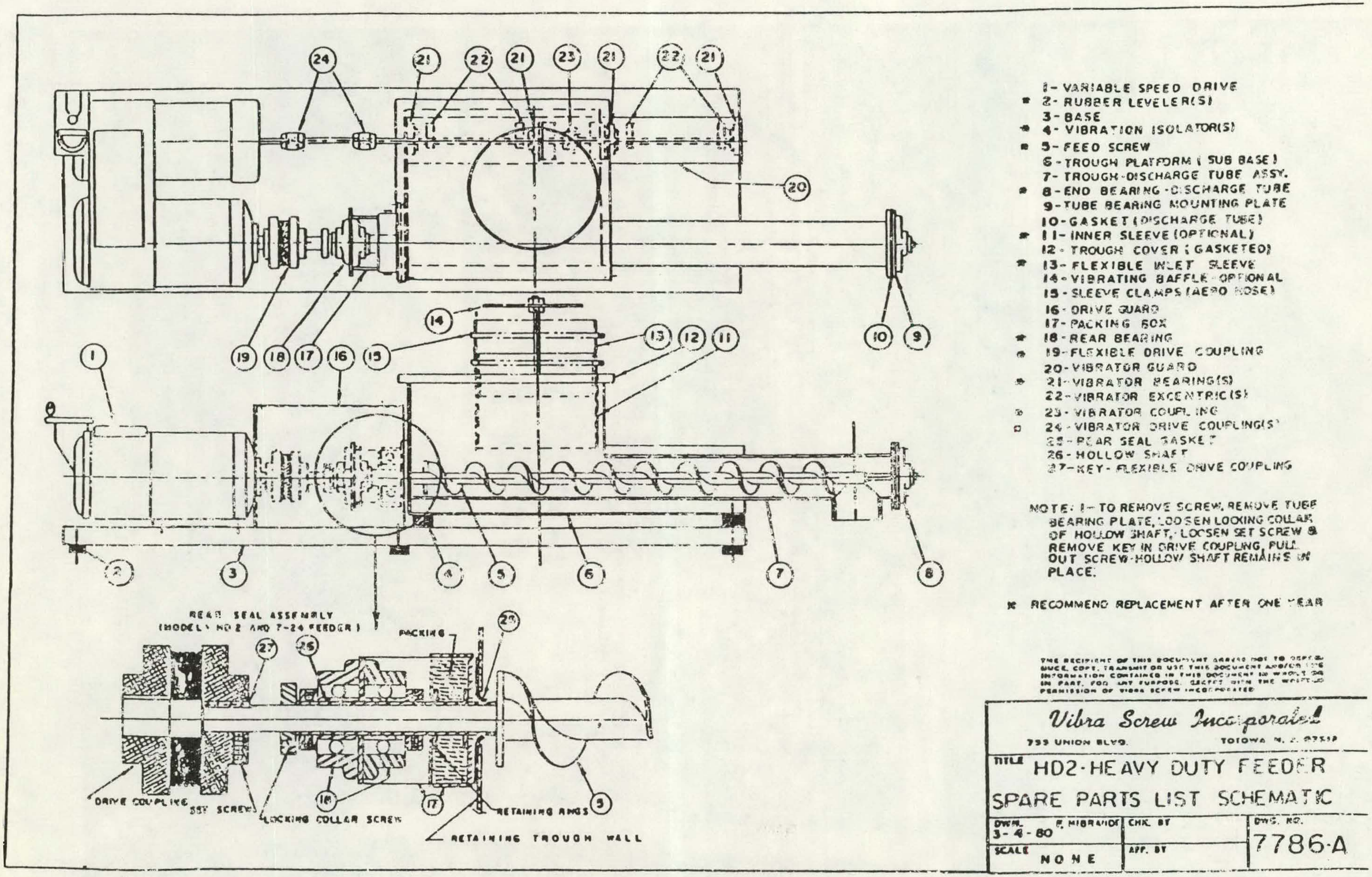

1- VARIABLE SPEED DRIVE
* 2- RUBBER LEVELER(S)
3- BASE
* 4- VIBRATION ISOLATOR(S)
* 5- FEED SCREW
6- TROUGH PLATFORM (SUB BASE)
7- TROUGH-DISCHARGE TUBE ASSY.
* 8- END BEARING-DISCHARGE TUBE
9- TUBE BEARING MOUNTING PLATE
10- GASKET (DISCHARGE TUBE)
* 11- INNER SLEEVE (OPTIONAL)
12- TROUGH COVER (GASKETED)
* 13- FLEXIBLE INLET SLEEVE
14- VIBRATING BAFFLE-OPTIONAL
15- SLEEVE CLAMPS (AERO HOSE)
16- DRIVE GUARD
17- PACKING BOX
* 18- REAR BEARING
* 19- FLEXIBLE DRIVE COUPLING
20- VIBRATOR GUARD
* 21- VIBRATOR BEARING(S)
22- VIBRATOR EXCENTRIC(S)
* 23- VIBRATOR COUPLING
* 24- VIBRATOR DRIVE COUPLING(S)
25- REAR SEAL GASKET
26- HOLLOW SHAFT
27- KEY- FLEXIBLE DRIVE COUPLING

NOTE: 1- TO REMOVE SCREW, REMOVE TUBE BEARING PLATE, LOOSEN LOCKING COLLAR OF HOLLOW SHAFT, LOOSEN SET SCREW & REMOVE KEY IN DRIVE COUPLING, PULL OUT SCREW-HOLLOW SHAFT REMAINS IN PLACE.

* RECOMMEND REPLACEMENT AFTER ONE YEAR

THE RECIPIENT OF THIS DOCUMENT AGREES NOT TO REPRODUCE, COPY, TRANSMIT OR USE THIS DOCUMENT AND/OR THE INFORMATION CONTAINED IN THIS DOCUMENT IN WHOLE OR IN PART, FOR ANY PURPOSE, EXCEPT WITH THE WRITTEN PERMISSION OF VIBRA SCREW INCORPORATED

Vibra Screw Incorporated
755 UNION BLVD. TOTOWA N. J. 07512

TITLE HD2-HEAVY DUTY FEEDER SPARE PARTS LIST SCHEMATIC		
DWN. F. MIBRANDT 3-4-80	CHK. BY	DWG. NO. 7786-A
SCALE NONE	APP. BY	

FIGURE 15
THREE-INCH FEED SCREW

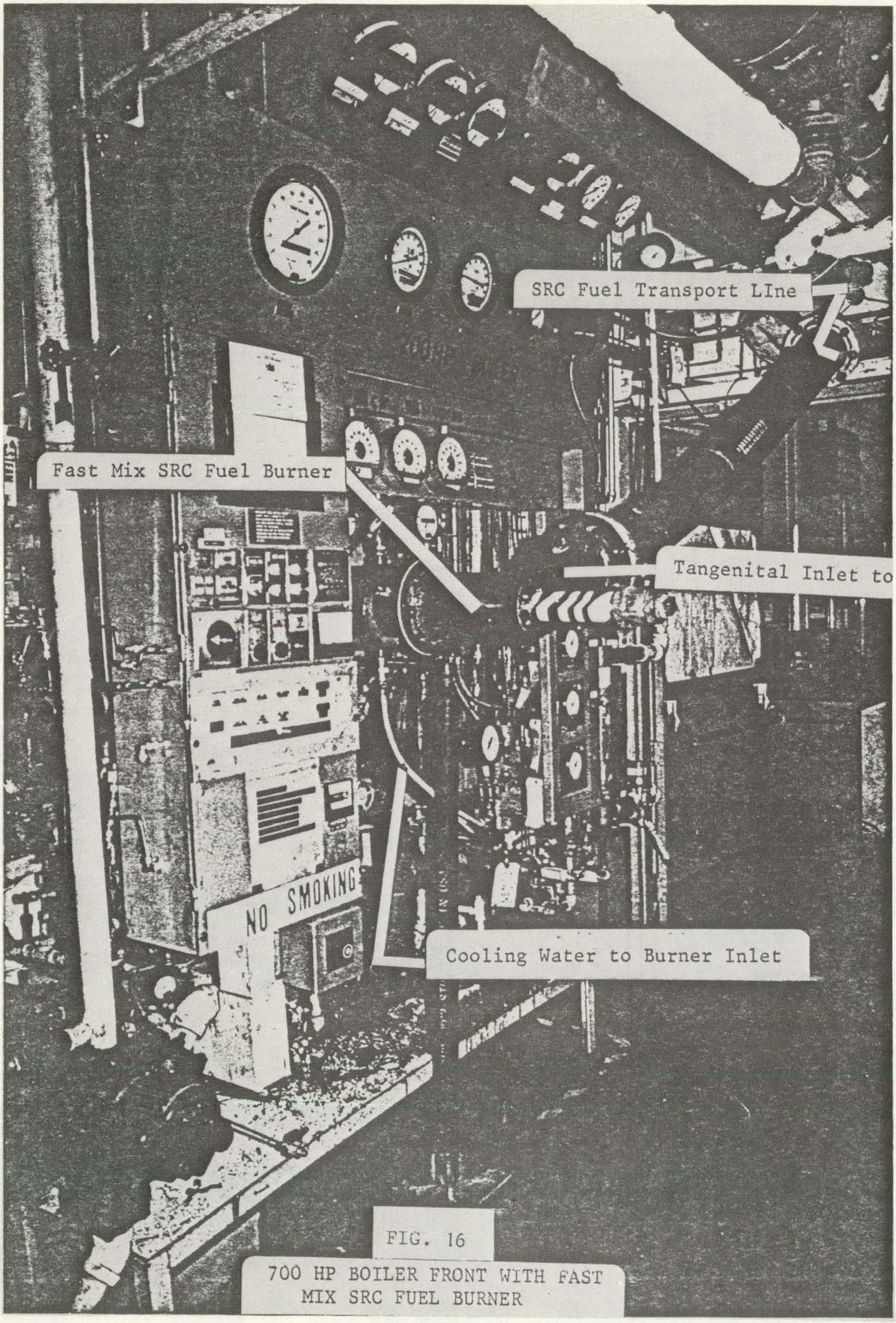

FIG. 16

700 HP BOILER FRONT WITH FAST MIX SRC FUEL BURNER

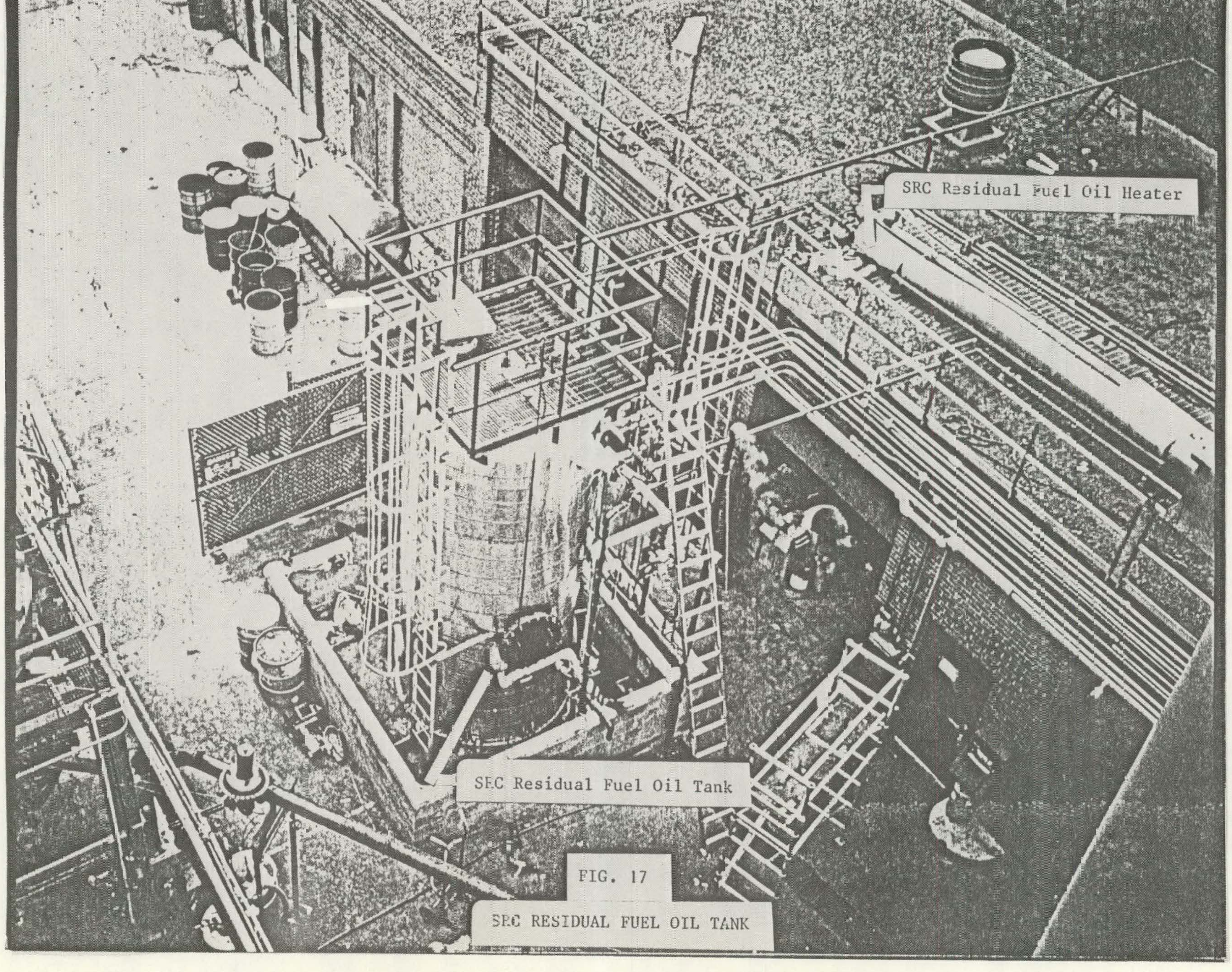

FIG. 17

SRC RESIDUAL FUEL OIL TANK

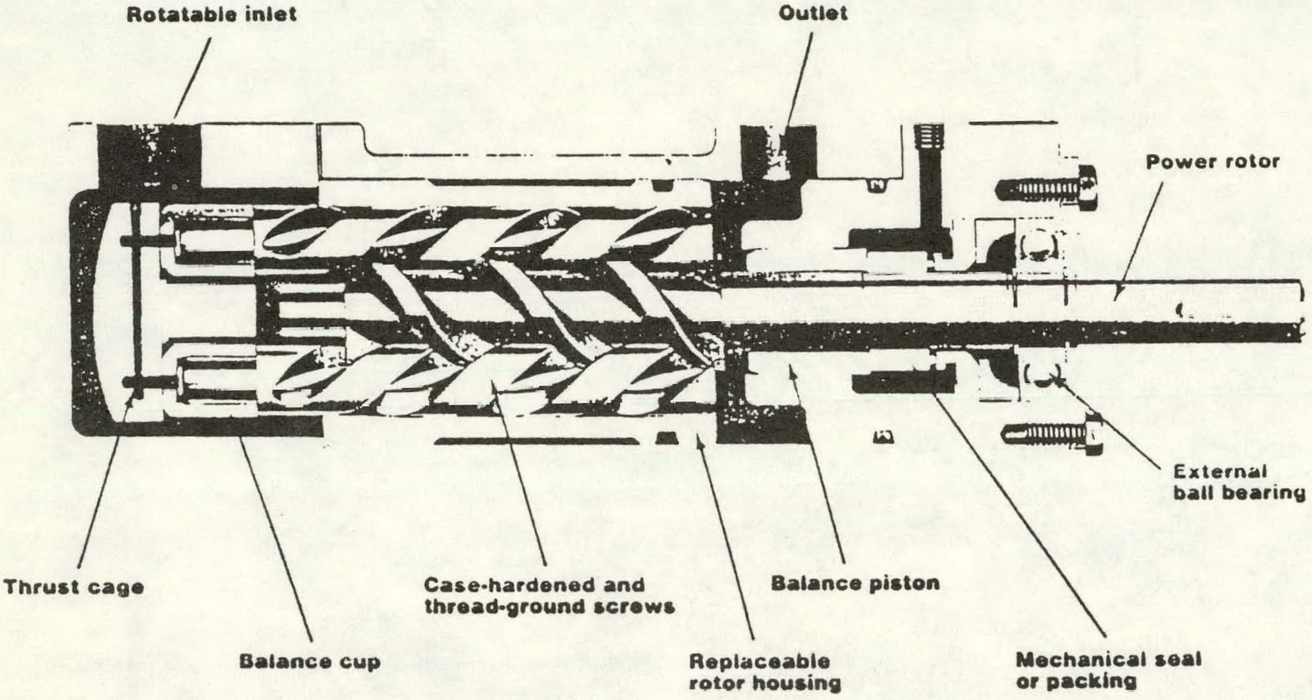

FIGURE 18

RESIDUAL OIL FUEL PUMP

PETC
PITTSBURGH
ENERGY
TECHNOLOGY
CENTER

COAL-OIL MIXTURE MASS FLOW METER

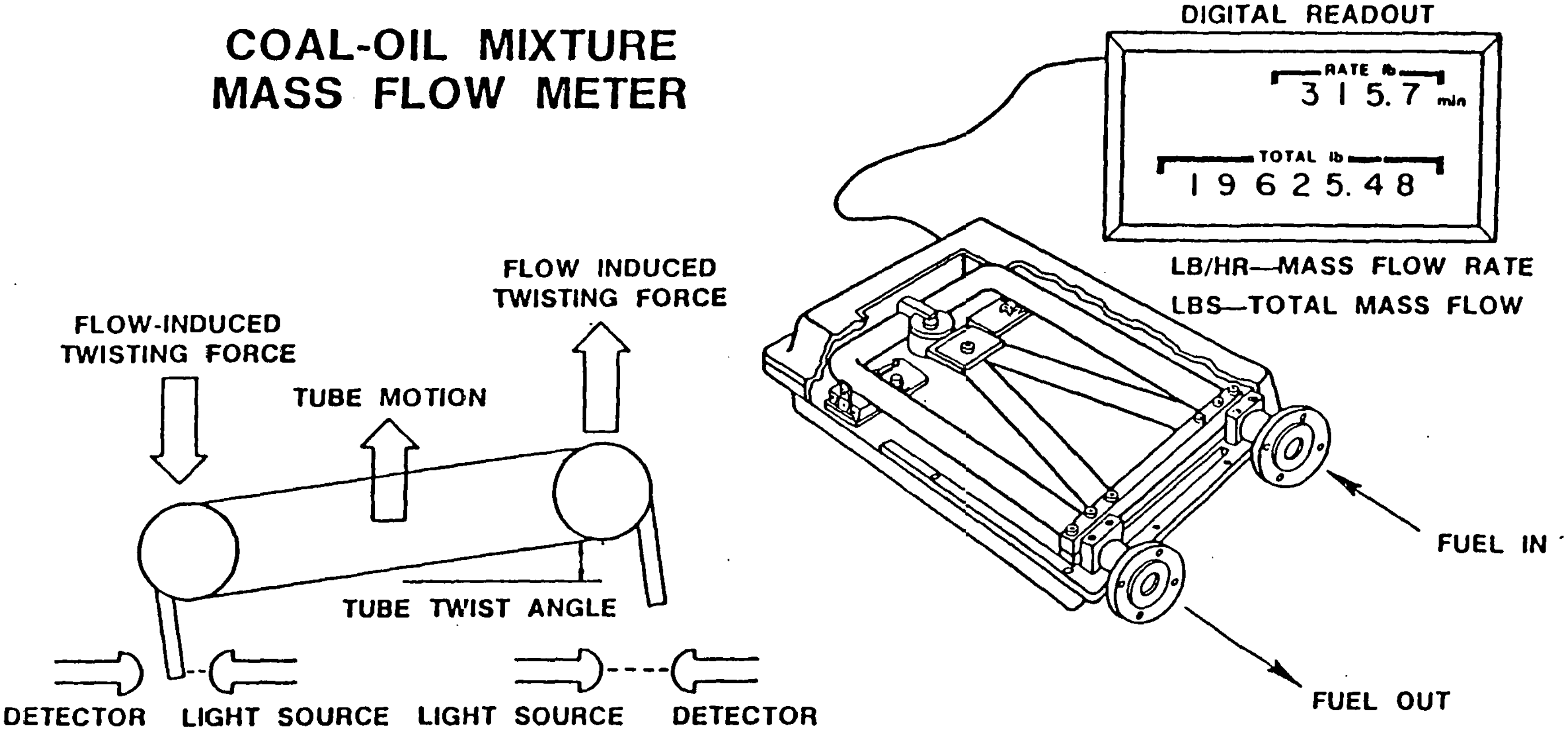

MICRO MOTION, INC.
2700 29th STREET
BOULDER, COLO. 80301

303-499-6400

FIGURE 19
MICRO MOTION FLOW METER

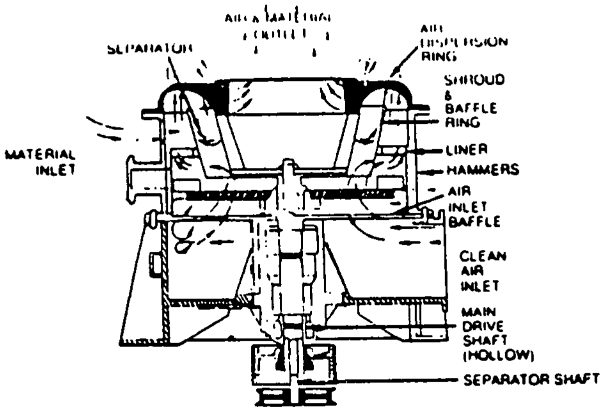

Sectional of MIKRO ACM PULVERIZER, illustrating air and material flow.

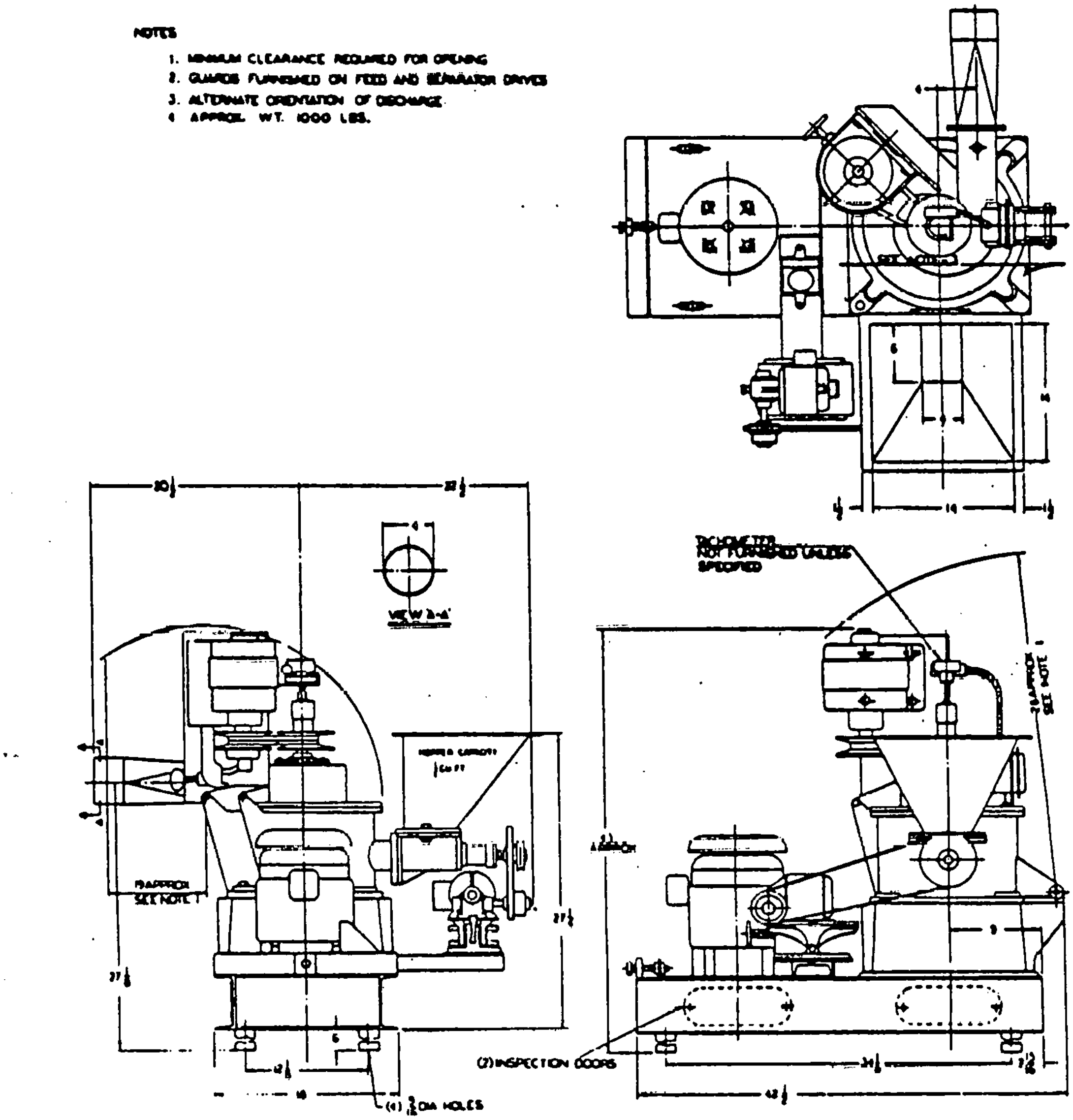

NOTES

1. MINIMUM CLEARANCE REQUIRED FOR OPENING
2. GUARDS FURNISHED ON FEED AND SEPARATOR DRIVES
3. ALTERNATE ORIENTATION OF DISCHARGE.
4 APPROX. WT. 1000 LBS.

FIGURE 20
PULVERIZER ARRANGEMENT

D. 700 hp BOILER FACILITY EQUIPMENT

(Shown in Figure 4.A, Appendix A)

D.1. Boiler Feedwater/Steam

a. Deaerator - Enpro Series 'A', Model CPD-310A with outlet capacity 30,000 lbs/hr

b. Boiler Feedwater Pump - Ingersoll Rand Type GTB rated for 80 gpm at 3550 rpm

c. Feedwater Flow Control Valve - Bailey Meter 1½-inch Globe Valve with Bailey Positioner

d. Steam Pressure Valve - Masoneilan 4-inch Globe Value

e. Air Cooled Condenser and Subcooler - Ecodyne Forced Draft System Condenser and Subcooler; Model 9W-38L-2F8 with nominal capacity of 25,000 lbs/hr steam and 21,180,000 Btu/hr heat transfer rate

f. Hot Well Tank - Carbon steel; rated for 200 psig at 400°F with a 150 gallon capacity

g. Steam Calorimeter - Croll-Reynolds Throttline Steam Calorimeter

D.2. Combustion Air Supply Equipment

a. Combustion Air Compressor - Joy Centrifugal four-stage compressor Model No. Turbo Air 30M4 Capacity: 2650 scfm at 135 psig

b. Combustion Air Heaters - Ionics, Inc., oil-fired closed cycle heaters (two)

c. Forced Draft Fan - Buffalo Forge type 45MW industrial fan arrangement No. 1, rated for 7300 acfm at 20 inches static pressure

d. Combustion Air Control Valve - C.E. Invalco 18-inch butterfly valve with Moore positioner (from fan)

D.3. General Fuel Handling/Supply Equipment

a. Raw Coal Storage Bin - 22-ton capacity, carbon steel construction

b. Rotary Valves - Butler Type HDR-F-S-8NH-1-RT-T3 Standard 2

c. Roller Mill - Williams Patent Crusher Gnome Roller Mill package unit; nominal rate: 2,000 lbs/hr

d. Cyclone Separator - Williams Patent Crusher Cyclone Collector

e. Dust Collector - Buffalo Forge Type P Aeroturn Square Weld

f. Pulverized Coal Supply Hopper - 18-ton capacity, carbon steel construction

g. CWM Mix Tank - 1800 gallon carbon steel, steam jacketed - agitator - 2 sets of turbine blades

h. Mix Tank Agitator - Proquip Model 7ZFS15B (10 hp motor) twin turbine blade agitator with 2-inch shaft (each turbine blade made up of four 11½-inch blades)

i. Recirc/Transfer Pump - Warren Rupp "Sandpiper" air powered diaphragm pump, Model SA2-A Type 3

j. CWM Hold Tank - 2800 gallon carbon steel, steam-jacketed, agitated by mixer with two turbine blades

k. Hold Tank Agitator - Proquip Model 7ZGS30B (7½ hp motor); twin turbine blade agitator with 2-inch shaft (each turbine blade made up of four 14½-inch blades)

l. CWM Variable Speed Pump - Moyno 5 hp 4E0ES1-CDQ progressing cavity pump with elastomer liner Buna-N stator and a 0.010-inch chrome plated undersized rotor

m. Recirculation Pump - Moyno 3 hp fixed speed; Model DF-CDT

n. Micro Motion Mass Flow Meter - Micro Motion Model C-100; Range: 0-100 lb/min range

o. Pinch Valve - RKL Controls Inc., cast iron diverter valve; 2-inch series DV-LH

p. Single Air Zone Register - Coen package single air zone register with wide-flare refractory throat and non-standard 9-inch offset extension

D.4. Flue-Gas Exhaust System Equipment

a. Stack Damper - W.K.M. Industries 24-inch butterfly valve with Bailey positioner

b. Flue-Gas Cooler - Ionics, Inc. shell and tube heat exchanger with gas on the tube side; designed for a maximum of 1,143,400 Btu/hr heat transfer; with 1151 sq ft heat transfer surface

c. Baghouse - American Air Filter Size 12-108-1732 Fabri-Pulse Dust Collector (for additional information, refer to Section III.2)

d. Induced Draft Fan - Zurn Clarage Series 1270, size 223

D.5. No. 6 Fuel Oil/Storage Handling Equipment

(Shown in Figure 4.A, Appendix A)

a. Storage Tank - 60,000 gallon carbon steel tank containing an internal steam coil

b. Suction Heater - Brown Fin Tube Tank Suction Heater Model No. 2BEU0805

c. Pump at Suction Heater - Roper Type 1 progressing cavity pump with 5 hp motor (not shown in Figure 5)

d. Pump - Moyno 3 hp Model 2L8-CDQ progressing cavity with elastomer liner, Buna-N stator and a 0.010-inch undersized chrome plated rotor

e. Heat Exchanger - Brown Fin Tube Double Pipe Hairpin Section, Type 40

D.6. SRC Fuel Equipment

(Shown in Figure 4.B, Appendix A)

a. Petrocarb Fuel Injection System - Petrocarb Pulverized Fuel Injection System for injecting fuel at a maximum rate of 1000 lbs/hr under a pressure of 103 psig ± 5 psi. Designed for coal particle size of 70 percent through 200 mesh and total moisture content not in excess of 1.0 percent water by weight. Figure 6 depicts this system. The system consists of a Feed Bin (3500 lbs capacity); two Storage Injectors in parallel (each 600 lbs capacity) and two Primary Injectors (each 1500 lbs capacity). The system is designed to operate, continuously, 24 hours per day. The Primary Injector is mounted on strain gauge load cells and the loss in weight recorded on a strip chart. The Storage Injectors are mounted above the Primary Injector and pressurized to 5 psi above the Primary Injector pressure. The system is automatically controlled by a series of differential pressure regulators and motorized valves.

b. ACM-10 Pulverizer - Pulverizing Machinery Co. Model 10 Mikro-ACM pulverizer of cast iron steel construction with 10 hp main drive motor

c. Vibra Screw Feed Bin - Vibra Screw Inc. Model LBB-8-400 Live Bottom Bin; 400-cu ft capacity

d. Bin Vent - Pulverizing Machinery Co. Model 10B Bin Vent; nine polyester felt bags, each four-feet long, HCE treated with Copper grounding wire

e. Bin Outlet Control Valve - Josam-Wey 6-inch knife valve

f. Feedscrew - Vibra Screw Feeder; heavy duty, 6-inch with 10-inch inlet and 27-5/8 inches from inlet to outlet

g. Blower - Buffalo Forge Size 5.5 Type E SWS1 fan arrangement rated for 2000 acfm at 3550 rpm and 70°F (first in series)

h. Control Valve - Centerline Manufacturing Co., 8-inch butterfly valve (Primary Air Shutoff)

i. Blower - Buffalo Forge Size 4 Type RE SWS1 fan arrangement rated for 1725 acfm at 3550 rpm and 70°F (second in series)

j. SRC Fuel Flow Control Valve - Centerline Manufacturing Co., 6-inch butterfly valve

D.7. SRC Residual Fuel Oil System Equipment

(Shown in Figure 4.C, Appendix A)

a. SRC Residual Fuel Oil Tank - 2500 gallon storage tank, externally heated by steam coils inerted with nitrogen

b. Recirculation Pump - Crane-Deming Type 20 positive displacement pump

c. Transfer Pump - DeLaval Imo positive displacement pump (Model #A3DE-106); variable 1-7 gpm at 200 psig

d. Mass Flowmeter - Micro Motion, Inc. mass flow meter, Model No. C50AFT1S; Range: 0-40 lbs/min

e. Steam Heater - Brown Fin Tube Co. Hairpin Section Type 80-1C000-320 shell and tube with oil on the tube side (two in series)

f. Fuel Flow Control Valves - Contromatics - 1-inch ball valves (recirculation or boiler feed valves)

D.8. SRC/Water Slurry Equipment

(Shown in Figure 4.D, Appendix A)

a. Center Air Flow Control Valve - North American 8-inch butterfly valve with Moore positioner

E. SYSTEM INSTRUMENTATION

Data Measurement Points (All information is fed to the DAS except as noted).

E.1. Boiler Feedwater

1. Temperature:
   Boiler Feedwater
   Condensate at DA Tank
   Feedwater Temperature at drum; (local)

2. Pressure:
   Feedwater Pressure before Steamdrum; 0-600 psig, (local)

3.	Flow:	Boiler Feedwater; Flow Orifice (0-100" H_2O) Boiler Feedwater Meter; Badger Meter (gallons) (local)
4.	Other:	Water Level Hot Well (gallons) Steamdrum Level, Bailey Control System (local)

E.2. Boiler Steam Recirculation System

1.	Temperature:	Steam from Boiler Subcooler Louvers (local)
2.	Pressure:	Steam Pressure at Boiler
3.	Flow:	Steam Flow from Boiler Flow Orifice (0-150" H_2O) Steam Flow Totalizer, Taylor, RDG x 360 = lb/hr, (local)

E.3. Secondary Air

1.	Temperature:	Secondary Air at Brandt
2.	Pressure:	Secondary Air, Brandt; (0-30" W.C.) Brandt 21DPT2235 transmitter

3. Flow: Secondary Air Flow, Brandt (0-2" W.C.) (Brandt Primary Element 10DSK1012-18; 601.6 lb/min)

E.4. Primary Air

1. Temperature: Center Fire Air Temperature at Brandt

2. Pressure (differential): Brandt PI-10PT2441-91 Transmitter

3. Flow: Center Fire Air Flow, Brandt (0-4.74" W.C.) (Brandt Primary Element B-NZP1131-8; (9165 lb/hr)

E.5. Flue Gas

1. Temperature:
Stack Blower Inlet
Stack Blower Outlet
Flue-Gas after Cooler
Flue-Gas at Sample Point (immediately downstream of boiler exit)
Duct Exit of Boiler
Flue-Gas Cooler Tube Temperature

2. Pressure:
Furnace Pressure (-1 - +3" H_2O)
Flue-Gas, Magnehelic; 0-1" H_2O (local)
Pulse-Jet Baghouse Pressure Drop (0-20" H_2O) (local)

3. Analysis: Opacity; Lear Siegler Model 611 (0-100%) (local)

O_2 after furnace, Taylor Model OA.269 (0-25%)

(See Appendix D for additional flue-gas analysis equipment.)

E.6. Fuel

1. Temperature:

   a. No. 6 Fuel Oil: Storage Tank (5 points)

   Test Fuel at Burner

   b. Coal: Coal Supply Hopper

   Dust Collector

   Proportioning Feed Tank

   c. Coal-Slurry Mixtures: Hold Tank

   Test Fuel at Burner

2. Pressure: Discharge Pressure at pump (0-400 psig) (local)

   Fuel Pressure before preheater (0-300 psig)

   Fuel Pressure at burner (0-150 psig) (local)

3. Flow: Floco Volumetric fuel flow (gallons) (local)
   Micro Motion Mass flowmeter (0-40 lb/min)
   Micro Motion Mass flowmeter (0-100 lb/min)

4. Other: Hold Tank Level, Magnehelic (0-100" H_2O) (local)

E.7. **Atomizing Steam**

1. Temperature: Atomizing Steam to Burner

2. Pressure: Pressure of Atomizing Steam at burner (0-150 psig) (local)

3. Flow: Atomizing Steam Flow (0-150" H_2O)

E.8. **Atomizing Air**

1. Temperature: Atomizing Air at orifice

2. Pressure: Atomizing Air Pressure at orifice (0-150 psig)

Atomizing Air Pressure at nozzle (0-150 psig)

3. Flow: Atomizing Air Flow (0-50" W.C.)

Note 1:

All temperatures are relayed to the Honeywell 48 point digital indicator and computer except as otherwise noted.

Note 2:

All pressure transmitters are of the type mentioned on the "Special Notes" at the end of this appendix.

Special Notes

In addition, special transmitter models and other instrumentation specifications are as follows:

1. All <u>high pressure transmitters</u> (i.e., pump outlet, nozzle pressure, atomizing air and atomizing steam) are Taylor Types 332TF (adj. 10-100 psig) or 333TF (adj. 50-500 psig).

2. All <u>low or differential pressure transmitters</u> except for Primary and Secondary air are Taylor Types 303TD (adj. 20-250" H_2O); 302TD (adj. 5-50" H_2O) and 301TD (adj. 0-10" H_2O).

3. Diaphragm seals for pressure transmitters on the SRC-I Residual Oil and SRC-I/water fuel trains are Ametek Models SN and SM with ranges to 1500 psig. Fill fluids were DC-200 silicone for low temperature applications (-60° +300°F) and DC-704 silicone for high temperature applications (30°-650°F).

4. The SRC 400-cubic foot bin weigh system was an Emery system No. J-10145. The weigh cell model was AC-10SH; the totalizer Model LT-4E; and the indicator Model AHE-24G.

5. The center air differential pressure transmitter and primary element were Taylor 301TD (0-10" H_2O) and Brandt Primary Element No. 10NZP1022-10-3.

6. The Residual Oil heater temperature transmitter was an AGM thermocouple transmitter with range of 0-400°F, type 'K'.

7. The Residual Oil tank temperature regulator was a Jordon Mark 80 with range of 160-225°F.

8. Indicating controllers for all processes were Taylor Models 1412RZ11 and 1414RZ11 with ranges of 3-15 psig.

F. FLUE-GAS ANALYSIS EQUIPMENT

Six flue-gas components are monitored continuously as they exit the boiler. They are:

1. Oxygen - Beckman Model 755 O_2 Analyzer; Operation Range: 0-25%
2. NO/NO_x - Beckman Model 951 NO/NO_x Analyzer: Operation Range: 0-1000 ppm
3. Carbon Dioxide - M.S.A. Lira 303 CO_2 Analyzer: Operation Range: 0-25%
4. Hydrocarbons - Beckman Model 400 Hydrocarbon Analyzer; Operation Range: 0-100 ppm
5. Carbon Monoxide - M.S.A. Lira 303 CO Analyzer; Operation Range: 0-1000 ppm
6. Sulfur Dioxide - M.S.A. Lira 303 SO_2 Analyzer; Operation Range: 0-4000 ppm

APPENDIX B

A. FIELD CLOTH COMPARATOR

The field comparator is a device designed to evaluate a fabric filtration in the field under actual operating conditions. Flue gas is extracted from the duct and piped to the test chamber where filtration takes place through one square foot of cloth. Heating jackets maintain the lines and chamber at constant temperature. In the filtration mode gas flows into the hopper side of the chamber--through the cloth--through the Balston filter #3, the condenser, dryer, pump, rotameter, and dry test meter. During reverse air cleaning, the opposite of the above occurs. Flue gas is pre-cleaned by Balston filter #1 before it enters the clean air side of the chamber. Dust, which is removed by the reverse cleaning, is trapped by Balston filter #2 prior to entering the condenser. The condenser is operated in an ice bath and serves to remove moisture from the flue gas prior to entry into the pump and rotameter. The silica gel dryer cartridge, placed between the condenser and pump, serves to remove all residual moisture not trapped by the condenser so that corrosive gases will not affect the pump.

A typical cycle involves 60 minutes of filtration. Cleaning is accomplished by 30 seconds to one minute of reverse air flow and 30 seconds to one minute of dust settling time. The frequency cleaning is dependent upon the pressure drop across the filter cloths. The reverse gas-to-cloth ratio was chosen to be at the gas-to-cloth ratio of 1:1.

Testing for each of the trial fuels proceeded as follows: A clean sample of cloth was installed in the test chamber. Flue gas was filtered for one hour at a given gas-to-cloth ratio taking data points (5 pressure readings and 10 temperature readings) every 10 minutes. Cleaning occurred whenever a ΔP across the filter reached 4 inches H_2O or as decided dependent upon the length of time until a given fuel was exhausted.

The filtration and cleaning cycle was repeated using the same sample of cloth for the duration of each test. Pressure drop data was averaged at each data point in order to plot the ΔP versus time graphs.

B. MOBILE ESP EQUIPMENT DESCRIPTION

The Wheelabrator-Frye Inc. mobile electrostatic precipitator, MESP, is a three field unit complete with automatic voltage controls, rappers, vibrators, hoppers and an induced draft fan capable of 9000 acfm at 700°F. The MESP is mounted on a trailer 8'0" wide by 54'6" long and 13'6" high.

CSH PLATE - STAR WIRE CONFIGURATION

Each field consists of discharge surface (DS) pipe frames that are 5'0" in height and 6'3" long and have 12 wires per frame. The collecting surface (CS) plate is 6'6" tall and consists of four interlocking strips for a length of 6'3". The plate spacing can be varied for gas passages of 10", 12", 14", 16", 18" and 20". The SRC program utilized five 10" gas passages which results in a collecting area of 1218.75 square feet.

The CS plate and DS pipe frames are of the Lurgi design. The interlocking strips of the CS plate are Lurgi's CSH design. Two standard wires are available in the pipe frames, the star wire which resembles a piece of square bar stock and the B-5 isodyn wire which resembles a large spiked saw blade. The star wire was used for the SRC program.

Each high voltage support frame is suspended from the casing with a three point insulator configuration. Each field also consists of a rapping insulator and a high voltage feed insulator. The insulators are kept clean by induced purge air and by compressed air which allows for any deposited ash to be blown off.

Each CS plate is individually bottom rapped with a rotating falling hammer. The hammers are a modified Lurgi DS hammer that weigh 8-10 pounds. All the DS pipe frames in each field are cleaned with a side mounted Eriez P-150 vibrator. Both CS rappers and DS vibrators are manually controlled for each field.

The ash or dust removal system consists of two trough hoppers per field with screw conveyors. The screws empty into two pyramidal hoppers which are emptied into 55-gallon drums by a vacuum system.

The required gas volume is induced with a Garden City Fan & Blower Co. RF19 fan. This fan is capable of pulling 9000 acfm at 700°F. The volume is controlled by an opposed louver damper. The specific collecting area, SCA, (ft^2/1000 acfm) for the MESP at 10" spacing is as follows:

ACFM	SCA
3000	406
5000	244
7000	174
9000	135

The gas face velocity (ft/sec) through the MESP is as follows:

ACFM	Ft/Sec
3000	1.9
5000	3.1
7000	4.3
9000	5.5

The automatic voltage controls are the Allen-Bradley Bulletin 1082 AVC. The transformer/rectifiers (T/R) are by Nothelfer Winding Laboratories (NWL). The controls have variable tap reactors which result in reactance of 30 percent, 50 percent or 70 percent. The T/R's have variable tap transformers which are rated at 45 KV and 75 KV. The T/R's also have a polarity switch for positive and negative corona. For the SRC fuels program the T/R's were set at 60 KV with 50 percent reactance with negative polarity. The current density ($\mu a/ft^2$) for the MESP at 10" spacing 25 $\mu a/ft^2$ at 10 ma and 123 $\mu a/ft^2$ at 50 ma.

The gas distribution devices consist of an inlet nozzle with two perforated plates and an egg crate flow straightener and an outlet nozzle with one perforated plate. The gas distribution has been measured with a hot wire anemometer and found to be 30 percent RMS at the inlet and 10 percent RMS at the outlet.

APPENDIX C

A. OPERATIONAL PROBLEMS ENCOUNTERED DURING NO. 6 FUEL OIL TESTING - SOLUTIONS, INNOVATIONS

During the three-week No. 6 fuel oil test period, persistent operating difficulties were encountered with the boiler feedwater chemistry, the atomizing steam differential pressure regulator, and the computer Data Acquisition System. These facilities and test operation problems were addressed and resolved during the test program and are explained in the following paragraph.

During the first week of parametric testing, computer shutdowns were a continuous occurrence due to a drop in the site power line voltage. Despite these computer shutdowns on three of the five days of the first week's testing period, shakedown testing proceeded with few interruptions. Two additional computer shutdowns occurred during the second and third week of steady-state testing, having no effects on the acquisition of data and completion of the No. 6 fuel oil test program.

Additional problems that occurred during the first week were the inability to maintain a 2.0-inch W.G. furnace pressure while running the boiler at an elevated excess air level (30 percent) and the lack of a necessary negative static pressure at the PETC isokinetic sampling port. To attain the specified 2.0-inch W.G. furnace pressure, the ESP induced draft fan was put into operation while adjusting the appropriate valving at the flue-gas flow splitter and ESP stack outlet.

In order to induce the desired negative static pressure at the PETC isokinetic sampling port, the butterfly damper valve at the inlet to the baghouse was opened slightly.

Prior to the start of the SRC Phase II program, a change to a different manufacturer's feedwater chemical treatment for neutralization of acidic conditions was made. Due to the chemical incompatibility of the new manufacturer's chemical water treatment with the former manufacturer's similar product, a problem arose as the following symptoms were noted: (1) poor steam quality as indicated by below average steam calorimeter temperature; (2) numerous boiler shutdowns that occurred after a false indication of a flow water level in the boiler steam drum caused a sudden and severe increase in boiler feedwater flow and consequently boiler steam flow. This false indication of the boiler water level was due to foaming, a chemical problem in which the high surface tension of the boiler water causes many of the steam bubbles to be encased by a water film. These film encased bubbles rose and passed out into the steam flow. The cause of the high surface tension was due to the high concentration of solids in the boiler which were a result of the incompatibility of chemicals recommended by the manufacturer for condensate treatment. To alleviate this problem the boiler water system was purged of the undesirable solids present by extensive surface blowdown during the latter portion of the No. 6 fuel oil test period. This eliminated the high solids concentration in the boiler water and, in conjunction with a new manufacturer's water treatment plan, prevented the foaming problem from occurring throughout the entire SRC Phase II program.

Over the course of the last two weeks of steady-state duration testing with No. 6 fuel oil, a problem developed in maintaining the flame in a desirable ball shape, concentrically centered in the firebox with no impingement. The problem was characterized by the flame periodically jumping into a "star" pattern as eight distinct fingers corresponded to the eight holes in the nozzle cap. As a result heavy impingement was observed on the firetubes. This undesirable condition was caused by a malfunctioning atomizing steam ΔP regulator. It could be alleviated by adjusting the boiler load and lowering the secondary air temperature until the flame returned to a ball shape and then re-establishing former full load conditions slowly, while critically adjusting the atomizing steam and fuel differential pressure. Additional insurance against this occurring was accomplished by maintaining an atomizing air/fuel ratio of 0.30. This higher atomizing air/fuel ratio was not attainable until after the atomizing steam ΔP regulator was bypassed. Atomizing air/fuel ratios prior to this were no higher than 0.17.

The minor problem of achieving a lower flue-gas temperature at the MESP inlet was remedied by removing a portion of the insulation covering the flue-gas duct line leading to the ESP from the flue-gas splitter.

B. OPERATIONAL PROBLEMS ENCOUNTERED DURING SRC FUEL TESTING - SOLUTIONS, INNOVATIONS

Prior to the inception of the formal SRC Fuel test program, shakedown of the SRC Fuel delivery system and slow mix burner was performed. Initial problems that arose were the following: (1) uneven flame distribution around the perimeter of the slow mix burner; (2) insufficient SRC Fuel flow that resulted in not being able to attain full boiler load; (3) severely fluctuating SRC Fuel flow to the boiler.

Early SRC Fuel testing during the week of August 15, 1982, indicated that some modifications would be necessary to the SRC Fuel burner to improve burner flame distribution. When viewing the flame from the rear of the boiler, it could be seen igniting only in the upper portion of the burner. Consequently, a scoop-shaped deflector was installed within the burner on the center guide pipe in an attempt to divert half of the SRC Fuel flow to the lower perimeter of the burner. Results from testing this deflector were unsuccessful as the flame shape remained unevenly distributed.

As a result, a "Tangential Inlet Elbow" was installed as shown in Figure 11.C which greatly improved the flame distribution characteristics.

Severe pulsations in the SRC Fuel flow, when utilizing the 3-inch feedscrew, resulted in a wide fluctuation in boiler load. This was corrected by eliminating the fluffing/fluidizing gas and operating the Vibra Screw and 400-cubic foot bin at a higher amplitude of vibration. This facilitated smooth fuel delivery by packing the fuel to a more uniform density without causing bridging or starving of the feedscrew.

The inability to reach full boiler load had become a continuing problem with the original 3-inch feedscrew during early shakedown runs. The utilization of a larger 5-inch feedscrew operating at a lower rotational speed enabled the successful attainment of full boiler load.

Unlike operations with the 3-inch feedscrew, it was necessary when using the 5-inch feedscrew to maintain the fluffing/fluidizing gases to the bottom of the 400-cubic foot bin and screw feed hopper in order to assure non-fluctuating fuel flow.

The subsequent problems which occurred during the SRC Fuel test period dealt primarily with the fuel delivery system and SRC Fuel burner. Initially, the "Econo" burner was tested. This burner had a straight 6-inch throat and was fabricated as a back-up to the slow mix burner. Problems encountered during the initial testing of the "Econo" burner were the inability to move the flame ignition point off of the burner tip, the resultant clinker buildup that this caused, and flame impingement on the boiler watertubes. The addition of a small amount of natural gas assistance to the SRC Fuel flame greatly aided in moving the flame off of the burner tip. Subsesquent testing of the slow mix burner resulted in similar burner fouling problems. Moderate flame impingement, which also occurred when using the slow mix burner, was alleviated somewhat by adjusting the position of the 30° co-current diffuser on the primary air/SRC Fuel guide tube within the burner.

The non-uniform delivery of SRC Fuel from the SRC Fuel storage bin via the 5-inch screw feeder caused moderate fuel flow fluctuations that resulted in combustion instabilities. These fluctuations were directly attributable to fluctuations in the SRC Fuel bin and feedscrew hopper pressures. To alleviate these pressure instabilities, a back-pressure-regulating-valve was installed on top of the SRC Fuel bin, maintaining it under a positive nitrogen pressure of ~32 inches W.G. In addition several nitrogen purge and/or fluidizing taps were installed on the bin bottom and on the feedscrew hopper maintaining a feedscrew hopper pressure of ~10-15 inches W.G.

Additional problems related to fuel handling were the occasional plugging and malfunctioning of the Petrocarb feed system to the 400-cubic foot SRC Fuel bin. This, at times, interrupted boiler operations when filling the SRC Fuel bin due to the disturbances of the SRC Fuel bin static pressure. To avoid this problem, the Petrocarb feed system was only operated when the boiler was not firing SRC Fuel, in the evening hours and at any other time during the daily testing hours, when warranted. To avoid the problem of not being able to fill the SRC Fuel bin due to a malfunctioning Petrocarb feed system, the 18-ton SRC Fuel storage bin in Building 93 was used to store and to transfer SRC Fuel to the Vibra Screw feed bin using an existing dense-phase pneumatic transport system.

☆U.S. GOVERNMENT PRINTING OFFICE: 1984-746-081/ 10134 REGION NO. 4