RL-2-10

Cover Sheet for a Hanford Historical Document Released for Public Availability

Released 1994

Prepared for the U.S. Department of Energy
under Contract DE-AC06-76RLO 1830

Pacific Northwest Laboratory
Operated for the U.S. Department of Energy
by Battelle Memorial Institute

Battelle

DISTRIBUTION OF THIS DOCUMENT IS UNLIMITED

[redacted]

BATTELLE-NORTHWEST
RECEIVED
JUL 22 1966
CIRCULATING COPY
TECHNICAL INFO. SECTION

DECLASSIFIED

RL-2-10

Hanford ~~Code~~ Category C-6S

Copy No. [redacted]

Date 6-1-66

RICHLAND FIVE-YEAR

02 R&D PROGRAM

HIGH POWER DENSITY FUEL PROGRAM

RICHLAND OPERATIONS OFFICE
DOUGLAS UNITED NUCLEAR, INC.
GENERAL ELECTRIC COMPANY - HAPD
ISOCHEM INC.
BATTELLE - NORTHWEST

[redacted]

[redacted]

DISTRIBUTION OF THIS DOCUMENT IS UNLIMITED

[redacted]

DECLASSIFIED

AEC-RL RICHLAND WASH.

DISCLAIMER

This report was prepared as an account of work sponsored by an agency of the United States Government. Neither the United States Government nor any agency thereof, nor any of their employees, make any warranty, express or implied, or assumes any legal liability or responsibility for the accuracy, completeness, or usefulness of any information, apparatus, product, or process disclosed, or represents that its use would not infringe privately owned rights. Reference herein to any specific commercial product, process, or service by trade name, trademark, manufacturer, or otherwise does not necessarily constitute or imply its endorsement, recommendation, or favoring by the United States Government or any agency thereof. The views and opinions of authors expressed herein do not necessarily state or reflect those of the United States Government or any agency thereof.

DISCLAIMER

Portions of this document may be illegible in electronic image products. Images are produced from the best available original document.

[redacted]

RL 2-10

HANFORD CODE C-65

Classification Cancelled and Changed To
DECLASSIFIED
By Authority of D S Lewis
CG-NMP-1 8-9-94
By J E Sabely 8-18-94
Verified By Jerri Maley
10-19-94.

This document consists of 25 pages. C[redacted]

RICHLAND FIVE-YEAR 02 R&D PROGRAM

HIGH POWER DENSITY FUEL PROGRAM

June 1, 1966

RICHLAND OPERATIONS OFFICE
DOUGLAS UNITED NUCLEAR, INC.
GENERAL ELECTRIC COMPANY - HAPD
ISOCHEM, INC.
BATTELLE MEMORIAL INSTITUTE

[redacted]

PLEASE SIGN BEFORE READING

Route To:	P.R. No.	Files Location	Route Date	Signature and Date
A R Kuenz	30009	328	JUL 22 1968	A R Kuenz 11-1-67

[redacted]

DECLASSIFIED

[redacted]

RICHLAND FIVE-YEAR

O2 R&D PROGRAM

HIGH POWER DENSITY FUEL PROGRAM

PRINCIPAL CONTRIBUTORS

R. W. Reid, Chairman	DUN
R. H. Shoemaker	GE
J. B. Kendall	ISO
J. E. Minor	BNW

MASTER

DECLASSIFIED [redacted]

[redacted]

RICHLAND FIVE-YEAR

02 R&D PROGRAM

SUMMARY	RL 2-0
BASIC PRODUCTION MISSION	RL 2-1
COPRODUCT MISSION	RL 2-2
INTEGRATED SITE OPERATION	RL 2-3
NON-DEFENSE PLUTONIUM MANAGEMENT	RL 2-4
TRANSPLUTONIUM PROGRAM	RL 2-5
PU-238 PROGRAM	RL 2-6
U-233 PROGRAM	RL 2-7
CO-60 PROGRAM	RL 2-8
PO-210 PROGRAM	RL 2-9
HIGH POWER DENSITY FUEL PROGRAM	RL 2-10
REACTOR MODERNIZATION	RL 2-11
FUNDAMENTAL AND GENERAL STUDIES	RL 2-12
NUCLEAR SAFETY PROGRAM	RL 2-13
COLUMBIA RIVER STUDIES	RL 2-14
WASTE MANAGEMENT	RL 2-15
OTHER ISOTOPES	RL 2-16
HIGHLY ENRICHED FUEL PROGRAM	RL 2-17

DECLASSIFIED [redacted]

[redacted]

TABLE OF CONTENTS

	Page
RL HIGH POWER DENSITY FUEL PROGRAM	5
INTRODUCTION	5
INCENTIVES	5
SCOPE AND OBJECTIVES	6
PROGRESS DURING REPORT PERIOD	7
BUDGET PERIOD PLANS AND EXPECTED RESULTS	8
STATISTICAL SUMMARY	10
EVALUATION OF PROGRESS AGAINST PLANS AND OBJECTIVES	11
DUN HIGH POWER DENSITY FUEL PROGRAM	12
SCOPE AND OBJECTIVES	12
PROGRESS DURING REPORT PERIOD	12
BUDGET PERIOD PLANS AND EXPECTED RESULTS	13
STATISTICAL SUMMARY	15
REFERENCES	16
GE HIGH POWER DENSITY FUEL PROGRAM	17
SCOPE AND OBJECTIVES	17
PROGRESS DURING REPORT PERIOD	17
BUDGET PERIOD PLANS AND EXPECTED RESULTS	18
STATISTICAL SUMMARY	19
REFERENCES	20
ISO HIGH POWER DENSITY FUEL PROGRAM	21
SCOPE AND OBJECTIVES	21
PROGRESS DURING REPORT PERIOD	21
BUDGET PERIOD PLANS AND EXPECTED RESULTS	21
STATISTICAL SUMMARY	23
PROGRAM CHART	24

DECLASSIFIED

[redacted]

RL HIGH POWER DENSITY FUEL PROGRAM

INTRODUCTION

Insertion of target materials into a reactor displaces fuel. The remaining fuel must have higher enrichment to maintain reactivity and must operate at higher power density, or higher specific power, to maintain total reactor power. A specific power increase of about 20 percent has been demonstrated in the U-233 program and in preliminary coproduct irradiations in the N Reactor. Some extension above this is probably feasible with present fuels. However, substantial increase, such as doubling the specific power, may require a change in fuel element design configuration, in fuel core alloy, and in materials used for fuel cladding. In addition, optimum utilization of the N-Reactor recirculating cooling system will require thorough study and perhaps some limited development work. Increasing specific power to improve reactor flexibility with minimum modification of the reactor is especially attractive for the K and N Reactors. It is a possible, though more difficult, alternative to reactor modernization at the small reactors, but it forgoes operating savings and introduces difficult reactor safeguards problems.

INCENTIVES

Successful development of high power density fuel should make it possible to double the power output of a reactor process tube. This would permit loading every other tube with a target material, loading the rest of the tubes with fuel, passing most of the reactor coolant through the fueled tubes, and maintaining present reactor power levels.

The productivity of the reactor under these conditions would depend on the blackness of the target and cooling requirements in the non-fueled process tubes. As an illustration of the reactor capability, however, the case has been analyzed wherein every other tube in the K Reactors is loaded with thoria and the fuel enriched to maintain reactivity. Under these conditions, the two K Reactors could produce 1300 kg of U-233 and about 800 kg of plutonium (6 percent Pu-240) annually. Hence, more than 60 percent of the neutrons would be diverted to the formation of a product other than plutonium.

The goal of being able to double the tube power in a Hanford reactor is very ambitious and challenging. However, even if this effort attains only limited success, such as 50 percent increase in power level, this would almost double the reactor capability for producing new products.

DECLASSIFIED

[redacted]

SCOPE AND OBJECTIVES

The objective of this program is to increase the fraction of reactor production which can be allocated to products other than plutonium-239 while operating the reactors at the maximum feasible power levels consistent with their design. The program has as its goal the diversion of one-half of the process channels for isotope production. Specific targets for the program are to demonstrate the operation of a large number of tubes in a K Reactor at tube power levels up to 3800 kilowatts and in an N-Reactor representative loading at tube power levels up to 10,000 kilowatts, and to define the chemical processing systems for the various fuel concepts. The assumption is made that technology and fuel design must be developed and demonstrated to support isotope production on a massive scale. Successful accomplishment of these objectives will depend upon identification of economically interesting design regions. The program is aimed at no particular isotopic target. When sufficiently developed, the program will be used to support work on the isotope program of interest at that time.

Major technical problems must be overcome to attain the program targets. For the B, C, D, KE and KW Reactors these include (a) use of alloying and heat treatment to obtain uranium metal with improved irradiation stability and behavior, (b) development of an aluminum-base cladding material and/or coatings with corrosion resistance superior to that of the present 8001-F aluminum alloy, (c) determination of the water voiding reactivity effect and the decreased Doppler effect and necessary associated modifications to the reactor safety control system, (d) analysis of the impact of higher specific power on coolant flow instability or meltdown involved with interruption of the reactor coolant supply, (e) development of the capability to obtain and maintain a more optimum axial flux distribution, and (f) determination of the orificing required to obtain the optimum coolant flow distribution in the reactor.

For N Reactor the major technical problem will be determination of the optimum distribution of coolant between process tubes containing driver elements and those containing target elements, together with the most economically attractive balance between production of candidate isotopes and Pu-239. In addition, in-reactor testing will be performed to demonstrate satisfactory performance of a high power density fuel. Problems associated with fuel development are provision of greater heat transfer area and increased flow capacities. These, together with requirements for minimizing temperature gradients and avoidance of chattering and vibration in high velocity flow, will be solved through analysis and laboratory experimentation. Calculations will be made to determine graphite moderator temperatures and will define development work required to avoid excessive hydriding of process tubes and graphite oxidation rates.

DECLASSIFIED

The Isochem program includes laboratory studies related to new dissolution procedures for both jacket removal and for uranium alloy dissolution. If new dissolver media are required, the effect on materials of construction and on downstream processing must be ascertained. Engineered studies are needed to define equipment, procedures and instrument systems for the safe dissolution, purification and conversion to oxide of irradiated uranium containing 2 to 5 percent U-235.

PROGRESS DURING REPORT PERIOD

Of the companies participating in this program, only Douglas United Nuclear, Inc., allocated significant funds to this program during FY 1966. However, advances made in fuel design and fabrication in General Electric Missions 1 and 2 contributed significantly to the technology required for high power density fuels in N Reactor, and preliminary dissolution characteristics of uranium alloys were obtained by Isochem.

In DUN, the initial five-tube irradiation test of 125 metal at about 150 percent of base specific power level was charged into KW Reactor during FY 1966. Irradiation testing of the aluminum-silicon cladding alloy was begun at 125 percent of normal tube power in D Reactor. Irradiation tests to investigate the dimensional stability of uranium alloys and the corrosion resistance of 8001 and high-silicon (10 percent) cladding alloys and nickel-plated 8001 cladding alloy in the K Reactors at 125 to 150 percent of present tube power were designed, and the fabrication of fuel elements for these tests was initiated.

Hot-die-size process parameters and techniques for nickel diffusion bonding of high-silicon aluminum alloy components to DUN fuel geometries were developed. Electro-plating and heat treating procedures were also developed for applying thin, high integrity nickel coatings to 8001 alloy clad hot-die-sized fuel.

Heat transfer experiments were completed to determine the conditions which would result in coolant flow instability at 200 percent of power using a full-scale model of a K-Reactor process channel.

Measurement of K infinity and flux distributions in wet and dry lattices was completed in the Physical Constants Test Reactor using a 125 metal - thoria supercell arrangement (3-to-1 fuel-to-target ratio) to normalize calculational models for evaluating reactor safety, operating characteristics and product buildup rates. A preliminary assessment of the incentives and techniques for obtaining a more desirable axial flux shaping as a means for reducing the maximum to average specific power was completed and documented.

DECLASSIFIED [redacted]

BUDGET PERIOD PLANS AND EXPECTED RESULTS

Douglas United Nuclear

Irradiation tests will be performed at 150 percent of base specific power level to develop uranium alloys and cladding materials or coatings for high power density applications. Operation of fuel elements at 150 percent of base specific power will be demonstrated. Tests at 200 percent of power will be initiated during the latter part of the budget period. Operation with fuel elements enriched to 2.1 percent U-235 will also be demonstrated at 130 percent of base specific power in an enriched fuel - lithium target reactor loading.

A mathematical model to predict the conditions resulting in coolant flow instability in a reactor process tube operating up to 200 percent of base specific power level will be developed from experimental data obtained in FY 1966. Heat flux burnout studies will be completed and a correlation model established.

The experimental data being obtained from PCTR reactivity measurements and from in-reactor demonstrations of product formation rates will be used to corroborate the accuracy of the calculational models for physics analysis.

Criticality experiments will be completed to establish firm criticality limits for 210 metal.

An in-reactor Production Test will be performed to evaluate the feasibility of axial flux shaping schemes.

General Electric Company

The performance capabilities of N-Reactor fuels being developed under other mission programs will be extended, and if necessary to achieve program objectives, development of a new fuel design will be initiated.

Engineering problems, such as providing adequate heat removal, reducing high temperature gradients, elimination of vibration and chattering in process tubes, limiting of thermal stress levels in process tube connectors, and achieving optimum coolant orificing between driver and target process tubes, will be examined and solved through analysis and laboratory experimentation.

The enrichment level of the fuel and optimum loading schemes are to be established for separate driver - target loadings. The reactor static and kinetic behavior of the designed loading will be characterized.

DECLASSIFIED

A new computer code capable of handling mixed lattices will be developed as needed. Exponential pile measurements to check predicted values will be made. Heat generation rates in the various components of the lattice will be determined as well as a new set of temperature coefficients. Safeguards analyses will be completed and fuel handling problems associated with highly enriched fuel will be identified.

Isochem

An engineering study will be made to define the criticality parameters for processing uranium enrichments in the range of 2 to 5 percent U-235 in the Purex solvent extraction system at the UO_3 Plant. This study will relate equipment designs, costs, capacities and performance to uranium enrichment and alloy and cladding composition.

A preliminary engineering study will be made to define the fundamental criticality parameters associated with the metal storage, transportation, and Purex dissolver systems.

DECLASSIFIED

[redacted]

STATISTICAL SUMMARY

	1967	1968	1969	1970	1971	5 Year Total
Dollars (in Thousands)						
General Electric (N Reactor)	70	68				
Douglas United Nuclear	160	220				
Isochem	33	40				
Pacific Northwest Lab	271	342				
Total	534	670	880	945	830	3,859
Man Years						
General Electric (N Reactor)	1.7	1.6				
Douglas United Nuclear	4.0	5.4				
Isochem	1.1	1.2				
Pacific Northwest Lab	5.4	6.8				
Total	12.2	15.0				
Equipment						
General Electric (N Reactor)						
Douglas United Nuclear	10	15				
Isochem	5					
Pacific Northwest Lab						
Total	20	15				

DECLASSIFIED

[redacted]

[redacted]

EVALUATION OF PROGRESS AGAINST PLANS AND OBJECTIVES

The schedule established for this program in FY 1966 was maintained. The intermediate objective of beginning irradiation tests at 150 percent power densities in a K Reactor during the budget period was achieved. Supporting analytical and laboratory work in engineering and physics was completed as planned.

DECLASSIFIED

[redacted]

DUN HIGH POWER DENSITY FUEL PROGRAM

SCOPE AND OBJECTIVES

The objective of the DUN High Power Density Fuel Program is to increase the fraction of reactor production which can be allocated to products other than plutonium. The specific target for the program is to demonstrate the operation of a large number of tubes in a K Reactor at tube power levels up to 3800 kilowatts,* and to do this by July, 1969.

Successful attainment of the above objective would permit half of the tubes in a K Reactor to be removed from heat production service and to be loaded with target materials without decreasing reactor power level. The characteristics of such a reactor would depend on the specific targets being employed, but for the illustrative case of thoria targets, more than 60 percent of the production would be U-233 and less than 40 percent would be plutonium.

Major technical problems must be overcome to attain the program targets. These include (a) use of alloying and heat treatment to obtain uranium metal with improved irradiation stability and behavior, (b) development of an aluminum-base cladding material and/or coatings with corrosion resistance superior to that of the present 8001-F aluminum alloy, (c) determination of the water voiding reactivity effect and the decreased Doppler effect and necessary associated modifications to the reactor safety control system, (d) analysis of the impact of higher specific power on coolant flow instability or meltdown involved with interruption of the reactor coolant supply, (e) development of the capability to obtain and maintain a more optimum axial flux distribution, and (f) determination of the orificing required to obtain the optimum coolant flow distribution between reactor process tubes.

PROGRESS DURING REPORT PERIOD

The initial five-tube irradiation test of 125 metal at 150 percent of base specific power level was charged into the KW Reactor during FY 1966. Irradiation testing of the aluminum-silicon cladding alloy was begun at 125 percent of normal tube power in a small reactor. Irradiation tests to

---

* This objective was stated as 3400 kw in the initial document of this series (Reference 1). This value is the average tube power required in the reactor with one-half of the process tubes loaded with target elements. Peak tube powers will reach about 3800 kw in these applications.

DECLASSIFIED

[redacted]

investigate the dimensional stability of uranium alloys and the corrosion resistance of 8001 and high-silicon (10 percent) cladding alloys and nickel-plated 8001 cladding alloy in the K Reactors at 125 to 150 percent of present tube power were designed, and the fabrication of fuel elements for these tests was initiated.

Hot-die-size process parameters and techniques for nickel diffusion bonding of high-silicon aluminum alloy components to DUN fuel geometries were developed. Electroplating and heat treating procedures were developed in the laboratory for applying thin, high integrity nickel coatings to 8001 clad alloy hot-die-sized fuel. An investigation of chemical plating methods using hydrazine as a nickel ion reducing agent was unsuccessful. The plate was porous and the adhesion properties were poor.

Heat transfer experiments were completed to determine the conditions which would result in coolant flow instability at 200 percent of power using a full-scale model of a K-Reactor process channel. The data indicate that the methods currently used to protect against coolant flow instability in individual fuel columns are applicable with slight modification to 200 percent power applications.

Measurement of K infinity and flux distributions in wet and dry lattices was completed in the Physical Constants Test Reactor using a 125 metal - thoria supercell arrangement (3-to-1 fuel-to-target ratio) to normalize calculational models for evaluating reactor safety, operating characteristics and product buildup rates. A preliminary assessment of the incentives and techniques for obtaining a more desirable axial flux shape as a means for reducing the maximum to average specific power was completed and documented. It was shown that up to a 50 percent tube power increase could be obtained in this manner without increasing the fuel failure potential, although this analysis extended beyond the demonstrated validity of the current fuel performance mathematical model.

BUDGET PERIOD PLANS AND EXPECTED RESULTS

Irradiation tests will be performed at 150 percent of base specific power level to develop uranium alloys and cladding materials or coatings for high power density applications. Operation of fuel elements at 150 percent of base specific power will be demonstrated. Tests at 200 percent of power will be initiated during the latter part of the budget period. Operation with fuel elements enriched to 2.1 percent U-235 will also be demonstrated at 130 percent of base specific power in an enriched fuel - lithium target reactor loading. Laboratory development of potentially improved cladding alloys or coatings will be continued in support of the fuels program.

DECLASSIFIED

A mathematical model to predict the conditions resulting in coolant flow instability in a reactor process tube operating up to 200 percent of base specific power level will be developed from experimental data obtained in FY 1966. Heat flux burnout studies will be completed and a correlation model established. These data will be used to determine safe reactor operating limits and for use in the preparation of safety analyses for high power density fuel applications.

The EXTERMINATOR two-dimensional, multigroup diffusion theory code has been obtained and will be normalized to permit accurate evaluation of composite fuel-target lattices. This code, and the one-dimensional HAMMER transport theory code will be used to normalize the more versatile but less rigorous MOFDA and ALTHEA codes for survey calculations of reactor safety, product buildup, and operating characteristics with complex lattices of fuel and target elements.

The experimental data being obtained from PCTR reactivity measurements and from in-reactor demonstrations of product formation rates will be used to corroborate the accuracy of the calculational models for physics analysis.

Criticality experiments will be completed to establish firm criticality limits for 210 metal. These measurements will provide the basis for establishing out-of-reactor criteria and specifications for the safe handling of fuel enriched up to 2.1 percent U-235.

An in-reactor Production Test will be performed to evaluate the feasibility of axial flux shaping schemes. This test will use available instrumentation and control mechanisms, but should identify instrumentation and control requirements to provide the necessary capacity for axial control on a full-scale basis.

By the end of the budget period, it is expected that fuel elements capable of operating up to 150 percent of base specific power will have been developed and demonstrated, and that the engineering and physics data required for 150 percent power applications in the DUN-operated reactors will be in place.

DECLASSIFIED

RL-401 (3 -66) AEC-RL RICHLAND, WASH

RICHLAND
OPERATIONS OFFICE

U. S. ATOMIC ENERGY COMMISSION

RESEARCH AND DEVELOPMENT STATISTICAL SUMMARY
02 PROGRAM

HAN-

1. MISSION NO. AND TITLE: Mission 10 - High Power Density Fuel
MISSION SUB-PROGRAM TITLE:

2. BUDGET ACTIVITY NO.: 02 50 10 10 65%
02 50 10 05 35%

3. CONTRACTOR AND CONTRACTOR NUMBER
A. Douglas United Nuclear, Inc. AT(45-1)-1857
B.
C.

4. PERSON IN CHARGE: T. W. Ambrose
INVESTIGATOR: R. W. Reid
INVESTIGATOR:

FIVE YEAR FORECAST

	CURRENT BUDGET YEARS * FY 19 67	FY 19 68	FY 19 69	FY 19 70	FY 19 71	5 YEAR TOTAL
5. MAN-YEARS						
A) SCIENTIFIC AND TECHNICAL	3.5	4.5				
B) OTHER	.5	.9				
TOTAL	4.0	5.4				
6. COSTS ($000'S)	$	$	$	$	$	$
A) DIRECT LABOR (INCL. COST OF SERV.)	80	108				
B) MATERIALS, TECH. SERV., SUB CONTRACTS	40	54				
C) SPONSORED WITH BNW	140	180				
TOTAL DIRECT	260	342				
D) INDIRECT EXPENSES	40	58				
TOTAL OPERATING COSTS	300	400	430	470	380	1980
E) EQUIPMENT (NEW)	10	5				
F) IRRADIATION UNIT COSTS						

7. COMMENTS:

DECLASSIFIED

* AGREES WITH SCHEDULE 189

PREPARED BY

DATE

[redacted]

REFERENCES

1. Woods, W. K. Richland Integrated Process Development Program - High Power Density Fuel Program. RL-GEN-22 SUP10 REV1. July 30, 1965. (SECRET).

2. Hladek, K. L. Production Test Authorization - 022, Preliminary Irradiation of 125 Metal. DUN-931. April 1, 1966. (SECRET).

3. Baars, R. E. Production Test Authorization - 010, High Silicon Aluminum Alloy Fuel Cladding. DUN-644. February 21, 1966. (SECRET).

4. Baston, G. D. Potential Tube Power Increases with Optimized Axial Flux Shaping. DUN-929. April 18, 1966. (CONFIDENTIAL).

DECLASSIFIED

[redacted]

GE HIGH POWER DENSITY FUEL PROGRAM

SCOPE AND OBJECTIVES

The objective of this program is to develop a fuel for N Reactor capable of supporting the economic production of radioisotopes other than plutonium-239 while operating the reactor at the maximum feasible power level consistent with its design. The goals are to provide the technology to make possible the diversion of one-third to one-half of the process channels for isotope production and the optimized loading schemes for fuel and targets. Individual tube powers may reach 8,000 to 10,000 kw with specific power density as high as 40 Mw/t.

PROGRESS DURING REPORT PERIOD

There has been no funding allocated to the program this fiscal year, and consequently, no direct efforts have been expended. However, the advances made in fuel design and fabrication under General Electric Missions 1 and 2 have contributed significantly to the technology required for development of the high power density fuel. In-reactor testing of various candidate fuel designs demonstrated dependable heat removal performances substantially as designed, and capabilities for operating fuels at significantly higher power density and under thermal conditions approaching those that will be experienced by the fuel to be developed in this program.

Some of the specific high fuel performance conditions achieved in different metallic fuel designs are central uranium temperature of 575 C, exposure greater than 3600 Mwd/t average and 5900 Mwd/t peak, specific power of 27 Mw/t, heat fluxes of 628,000 Btu/hr-ft^2, and swelling as low as 1.9 percent $\Delta V/V$ at 4000 Mwd/t exposure.

A test block of 2.1 percent enriched GE Mission 2 fuel having a designed capability of 33 Mw/t specific power and 785,000 Btu/hr-ft^2 heat flux, is undergoing exposure in the reactor. The fuel has been designed for 4800 Mw reactor operation with single tube power as high as 5650 kw. Other current programs include the design of Mark III fuel elements under Mission 1, weighing 22-25 lbs/ft for reactor power operation at 4800 Mw, and the design of an in-pile limited tube boiling test on Mark I fuel elements. The latter test is to determine primarily the effect of subchannel nucleate boiling on the tube flow stability, and the feasibility of narrowing the operating safety margins for raising power levels.

DECLASSIFIED

[redacted]

BUDGET PERIOD PLANS AND EXPECTED RESULTS

In order to make available one-third to one-half of the process channels for loading non-heat generating irradiation targets while maintaining the same reactor power levels, it will be necessary to concentrate heat generation into the fuel loaded in the remaining process channels. This calls for the development of a high power density fuel and the redistribution of coolant flow among the process tubes in order to provide adequate cooling and to minimize temperature gradients.

The performance capabilities of N-Reactor fuels being developed under other mission programs will be extended, and if necessary to achieve program objectives, development of a new fuel design will be initiated. Engineering problems, such as providing adequate heat removal, reducing high temperature gradients, elimination of vibration and chattering in process tubes, limiting of thermal stress levels in process tube connectors, and achieving optimum coolant orificing between driver and target process tubes, will be examined and solved through analysis and laboratory experimentation.

The enrichment level of the fuel and optimum loading schemes are to be established for separate driver-target loadings. Initial studies will include design of fuel with arbitrary geometry and enrichment for use as a survey tool in parametric studies made in exploration of feasibility for irradiation of such materials as Np-237, Co-59, and Bi-209 as targets. Driver enrichments of up to 3 percent U-235 will be considered. The reactor static and kinetic behavior of the designed loading will be characterized.

A new computer code capable of handling mixed lattices will be developed as needed. Exponential pile measurements to check predicted values will be made. Heat generation rates in the various components of the lattice will be determined to define development work to avoid excessive hydriding of process tubes as well as temperature coefficients. Safeguards analyses will be completed and fuel handling problems associated with highly enriched fuel will be identified.

Proposed milestones will include (1) in-reactor testing of a column of fuel at 10,000 kw during CY 1969, and (2) demonstration of a block of fuel columns at 10,000 kw per tube in a supercell arrangement during CY 1970.

DECLASSIFIED

[redacted]

RL-401 (3-66) AEC-RL RICHLAND, WASH

RICHLAND
OPERATIONS OFFICE

U. S. ATOMIC ENERGY COMMISSION

RESEARCH AND DEVELOPMENT STATISTICAL SUMMARY

02 PROGRAM

HAN-

1. MISSION NO. AND TITLE: Mission 10 - High Power Density Fuel
MISSION SUB-PROGRAM TITLE:

2. BUDGET ACTIVITY NO.:

3. CONTRACTOR AND CONTRACTOR NUMBER:
A. General Electric Company AT(45-1)-1350
B.
C.

4. PERSON IN CHARGE: M. C. Leverett
INVESTIGATOR: R. H. Shoemaker
INVESTIGATOR:

FIVE YEAR FORECAST

	CURRENT BUDGET YEARS * FY 1967	FY 1968	FY 1969	FY 1970	FY 1971	5 YEAR TOTAL
5. MAN-YEARS						
A) SCIENTIFIC AND TECHNICAL	1.3	1.2				
B) OTHER	.4	.4				
TOTAL	1.7	1.6				
6. COSTS ($000'S)	$	$	$	$	$	$
A) DIRECT LABOR (INCL. COST OF SERV.)	19	17				
B) MATERIALS, TECH. SERV., SUB CONTRACTS	26	24				
C) SPONSORED WITH BNW	70	102				
TOTAL DIRECT	115	143				
D) INDIRECT EXPENSES	25	27				
TOTAL OPERATING COSTS	140	170	350	350	300	1310
E) EQUIPMENT (NEW)						
F) IRRADIATION UNIT COSTS						

7. COMMENTS:

DECLASSIFIED

* AGREES WITH SCHEDULE 189

PREPARED BY

DATE

[redacted]

REFERENCES

1. Leverett, M. C. General Electric, Hanford Atomic Products Department Budget for FY 1968 and Revision of Budget for FY 1967. RL-GEN-918. April 15, 1966.

2. Woods, W. K. Richland Integrated Process Development Program - High Power Density Fuel Program. RL-GEN-22 SUP10 REV1. July 30, 1965. (SECRET).

DECLASSIFIED

[redacted]

ISOCHEM HIGH POWER DENSITY FUEL PROGRAM

SCOPE AND OBJECTIVES

The objective of the Isochem sponsored portion of this program is to define the technologies required to process safely the irradiated fuels used to achieve a high power density in the Hanford reactors. The studies include chemical systems for the decladding and dissolution of the new cladding materials and fuel alloys to be used; equipment, procedures, and instrument systems as needed to process uranium containing 2 to 5 percent uranium-235 safely in Isochem-operated facilities; new materials of construction for containment of the chemical systems used to declad and dissolve the new fuels.

PROGRESS DURING REPORT PERIOD

Preliminary engineering studies were made to identify the changes that would probably be required to permit the safe processing of irradiated uranium containing 2 to 5 percent uranium-235 in the Isochem-operated facilities. These studies indicate that, with dissolver inserts, additional instruments for control of criticality hazards, and new calcination equipment, enriched uranium can probably be safely processed in Isochem facilities.

Samples of unirradiated candidate fuels and cladding have been obtained, and exploratory laboratory studies to define the dissolution characteristics of these materials have been initiated.

BUDGET PERIOD PLANS AND EXPECTED RESULTS

Expected Results in FY 1967

Laboratory studies will be continued to define the process effects of the new materials being considered for cladding and uranium alloying. Alloying constituents currently identified include small amounts of iron, aluminum and silicon in the uranium and substantial amounts of silicon and nickel in (and on) the aluminum jackets. The process effects of potential concern include dissolution rates, increased corrosion induced by trace ions or modified chemical systems, emulsification of solvent extraction streams, and precipitation in concentrated waste streams.

Engineering studies will be initiated to identify development needs and to provide preliminary cost estimates for the plant modifications required to

DECLASSIFIED

[redacted]

process these fuels safely. Currently identified areas of study include new or modified equipment for 1) the safe transport and dissolution of the irradiated fuels in the indicated range of enrichment, 2) instrument and control systems required to control criticality hazards in the Purex processing equipment, and 3) calcination systems compatible with the throughput projections and geometric limitations imposed by criticality considerations.

By year end, preliminary estimates of processing capability and capital and operating costs will be available for each of the enrichments and fuel compositions under active investigation.

Anticipated Problems in FY 1968

Based on combined DUN, GE and Isochem studies, the fuel types of highest potential for Hanford will be chosen. Engineering development will be initiated as required to provide a technological basis for plant revisions to process the fuels of choice. Laboratory and engineering studies will be extended to characterize the process and engineering problems associated with additional fuel types of potential interest.

Programs for FY 1969, 1970, and 1971

Equipment and instrument systems development will be completed and plant revisions scoped to enable the Isochem facilities to process safely the chosen fuel types.

DECLASSIFIED

[redacted]

RL-401 (3-66) AEC-RL RICHLAND, WASH

RICHLAND
OPERATIONS OFFICE

U. S. ATOMIC ENERGY COMMISSION

RESEARCH AND DEVELOPMENT STATISTICAL SUMMARY

02 PROGRAM

HAN-

1. MISSION NO. AND TITLE: Mission 10 - High Power Density Fuel
MISSION SUB-PROGRAM TITLE:

2. BUDGET ACTIVITY NO.: 02 50 16 02 0

3. CONTRACTOR AND CONTRACTOR NUMBER
A. Isochem AT(45-1)-1851
B.
C.

4. PERSON IN CHARGE: R. E. Tomlinson
INVESTIGATOR: H. C. Rathvon
INVESTIGATOR: J. B. Fecht

FIVE YEAR FORECAST

	CURRENT BUDGET YEARS * FY 1967	FY 1968	FY 1969	FY 1970	FY 1971	5 YEAR TOTAL
5. MAN-YEARS						
A) SCIENTIFIC AND TECHNICAL	0.8	0.9				
B) OTHER	0.3	0.3				
TOTAL	1.1	1.2				
6. COSTS ($000'S)	$	$	$	$	$	$
A) DIRECT LABOR (INCL. COST OF SERV.)	12	13				
B) MATERIALS, TECH. SERV., SUB CONTRACTS	14	20				
C) SPONSORED WITH BNW	61	60				
TOTAL DIRECT	87	93				
D) INDIRECT EXPENSES	7	7				
TOTAL OPERATING COSTS	94	100	100	125	150	569
E) EQUIPMENT (NEW)	5					
F) IRRADIATION UNIT COSTS						

7. COMMENTS:

DECLASSIFIED

* AGREES WITH SCHEDULE 189

PREPARED BY

DATE

[redacted]

HIGH POWER DENS
IO-DUN AND

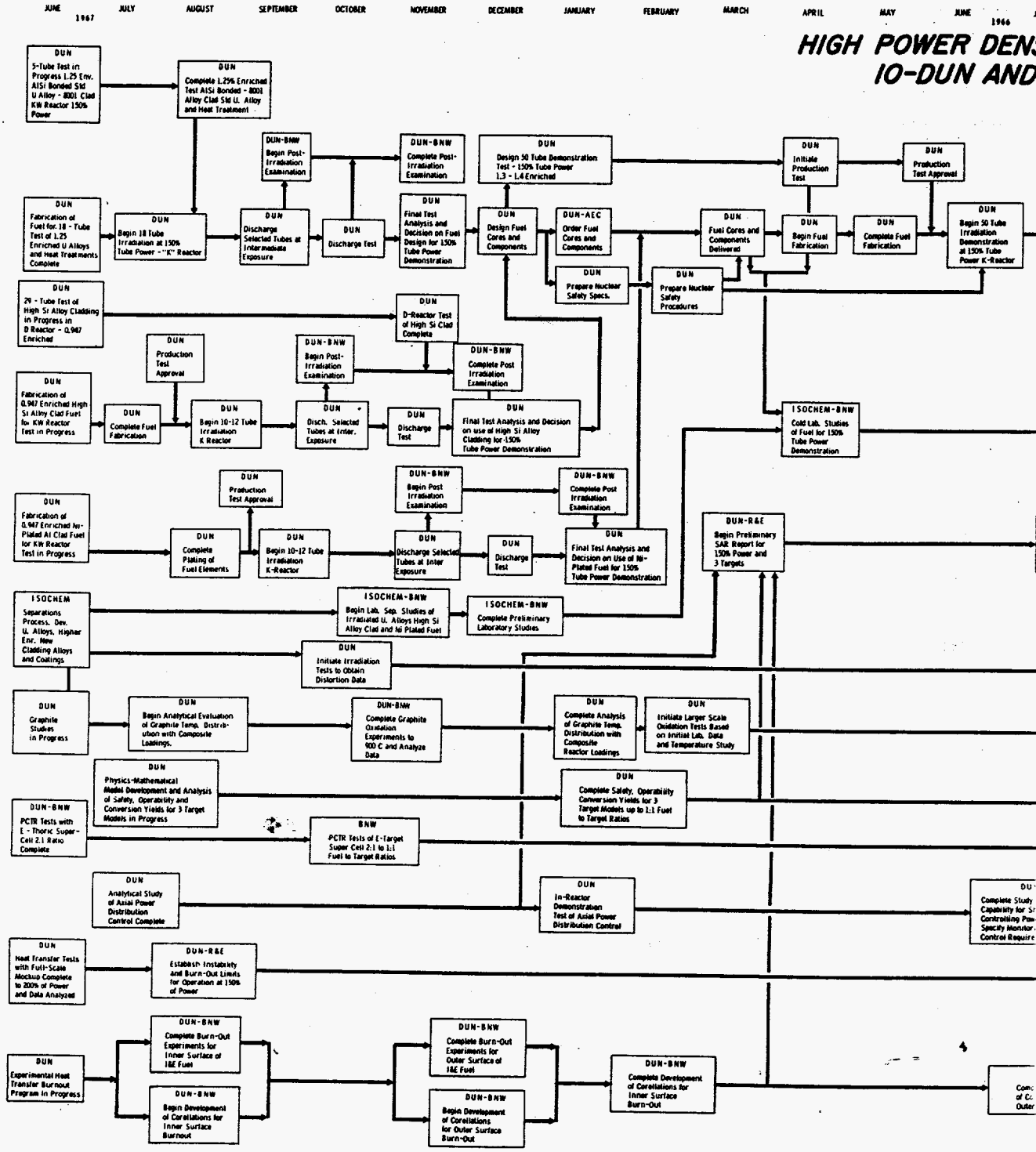

VSITY FUEL MISSION
D 10-ISOCHEM

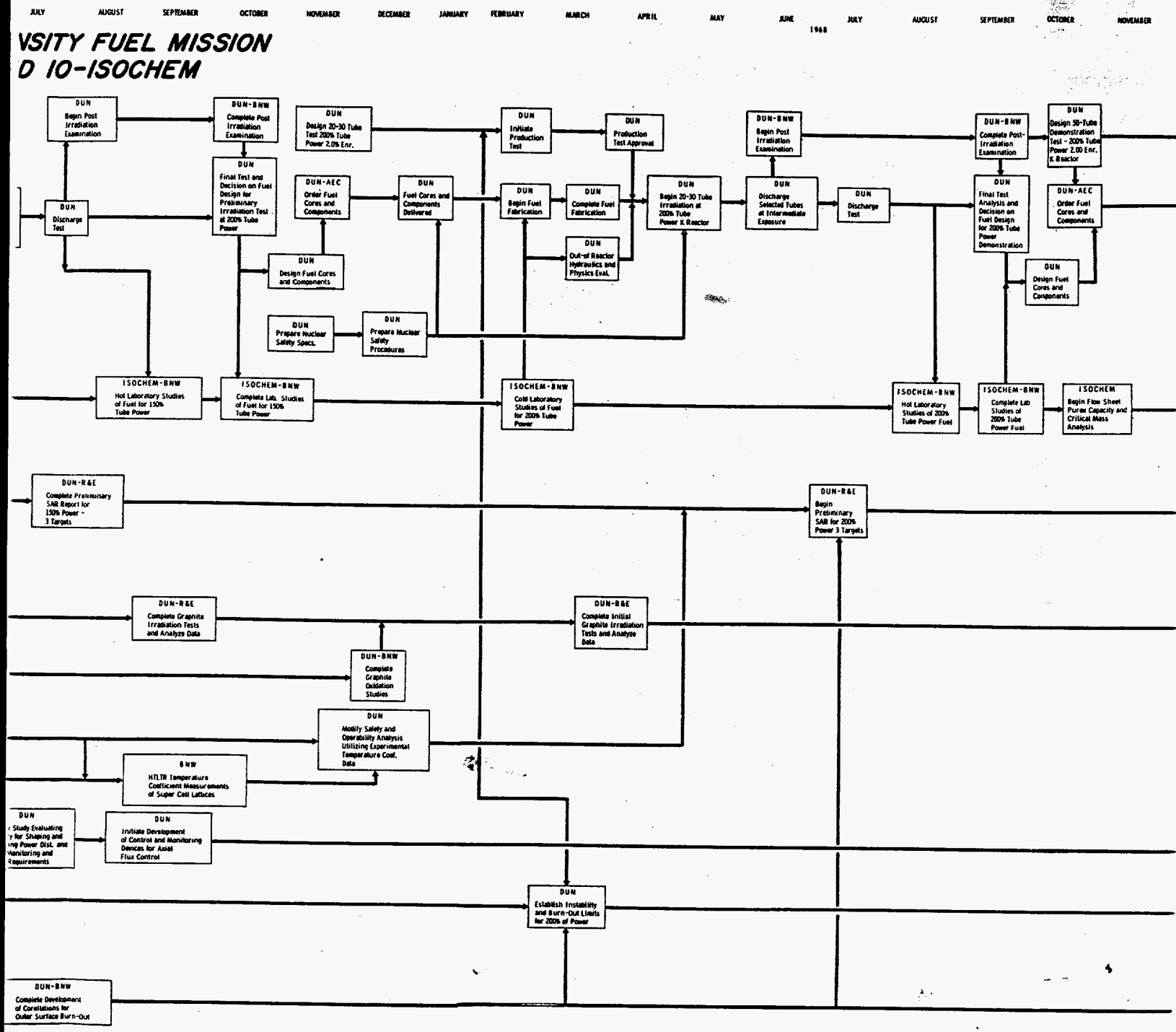

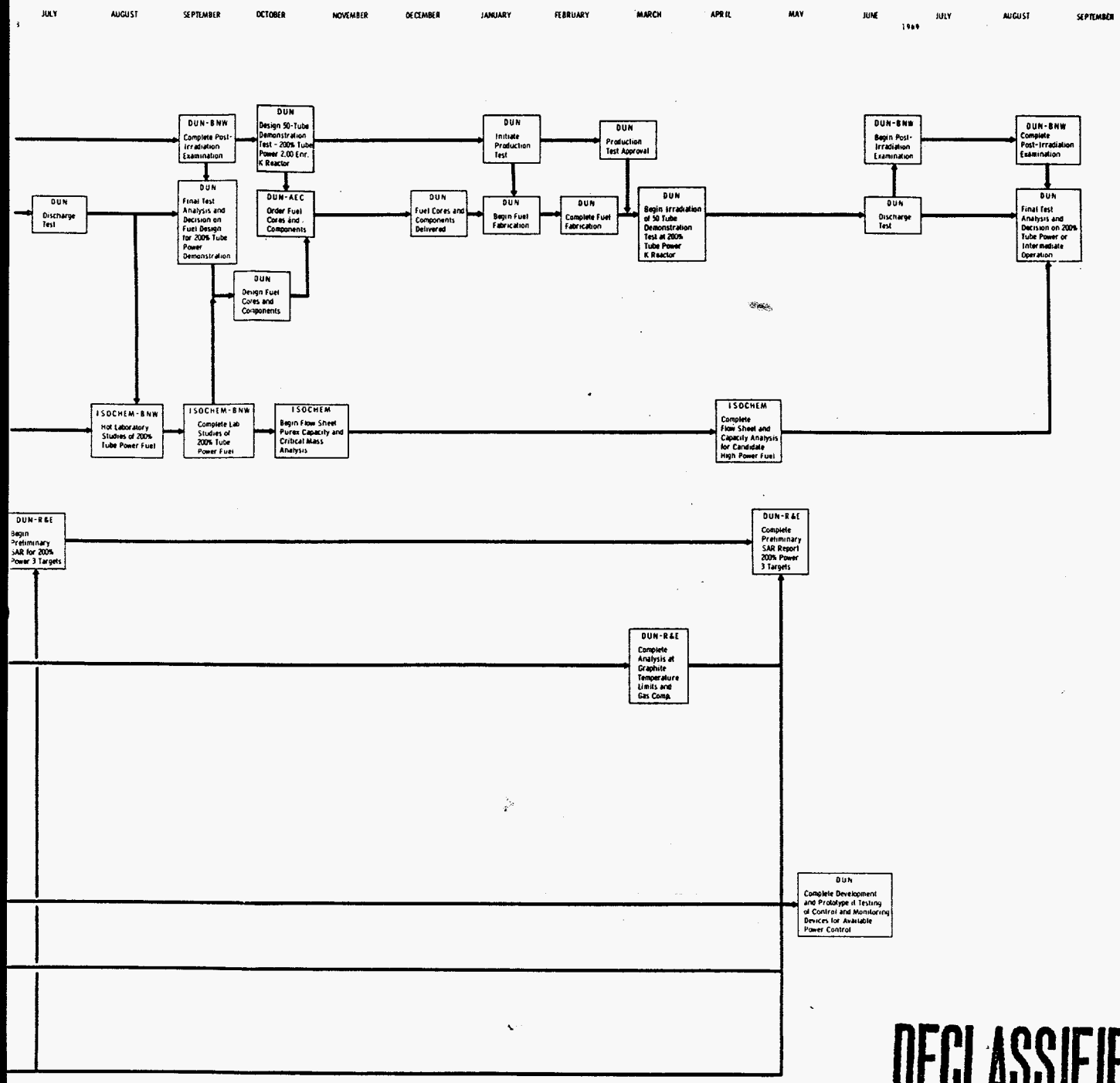

DECLASSIFIED

[redacted]

[redacted]

DISTRIBUTION

RICHLAND OPERATIONS OFFICE

1-23. D. G. Williams

DOUGLAS UNITED NUCLEAR, INC.

24. T. W. Ambrose
25. P. A. Carlson
26. R. G. Geier
27. C. D. Harrington
28. C. W. Kuhlman
29. W. M. Mathis
30. R. Nilson
31. G. F. Owsley
32. R. W. Reid
33. O. C. Schroeder
34. J. T. Stringer

GENERAL ELECTRIC COMPANY - HAPD

35. R. L. Dickeman
36. D. W. Leiby
37. M. C. Leverett
38. M. Lewis
39. J. S. McMahon
40. J. Milne
41. W. S. Nechodom
42. G. W. Nicholaus
43.-44. J. W. Riches/D. L. Condotta
45. R. H. Shoemaker
46. R. E. Trumble

ISOCHEM INC.

47. R. F. Campbell
48. R. A. Connell
49. J. B. Fecht
50. O. F. Hill
51. J. N. Judy
52. P. E. Reed
53. A. J. Scott
54. H. P. Shaw
55. A. E. Smith
56.-57. R. E. Tomlinson
58. J. H. Warren

BATTELLE-NORTHWEST

59. F. W. Albaugh
60. C. A. Bennett
61. J. J. Cadwell
62. F. G. Dawson
63. D. R. de Halas
64. E. A. Eschbach
65. J. J. Fuquay
66. H. Harty
67. E. R. Irish
68. A. R. Keene
69. G. A. Last
70. R. S. Paul
71. A. M. Platt
72. C. A. Rohrmann
73. E. E. Voiland
74. M. T. Walling, Jr.
75. E. C. Worlton

DECLASSIFIED

[redacted]