Conf-771029-15

PREPRINT UCRL- 79700

Lawrence Livermore Laboratory

A 25 MEGAJOULE ENERGY STORAGE AND DELIVERY SYSTEM FOR THE SHIVA LASER

W.L. Gagnon, P.R. Rupert, L. Berkbigler, S.M. Carder, D.G. Gritton, R.W. Holloway
M.M. Howland, and K. Whitham

October 18, 1977

This paper was prepared for the 7th Symposium on Engineering Problems of Fusion Research, Knoxville, Tennessee, October 25-28, 1977.

A 25 MEGAJOULE ENERGY STORAGE AND DELIVERY SYSTEM FOR THE SHIVA LASER*

W.L. Gagnon, P.R. Rupert, L. Berkbigler, S.M. Carder,
D.G. Gritton, R.W. Holloway, M.M. Howland, and K. Whitham

University of California, Lawrence Livermore Laboratory
Livermore, California 94550

ABSTRACT

A 25 megajoule, 20 kV capacitive energy storage and delivery system has been built and tested for Shiva - a 20 arm, 10 kJ, 20 TW neodymium glass fusion research laser. This system supplies over 3.5 megamperes to xenon flashlamps for optical pumping of the laser amplifier. About 15% of the energy is used to establish magnetic fields within Faraday rotator glass.

A digital based control and diagnostics scheme is employed through the entire pulse power system. This scheme utilizes a distributed digital data bus that addresses every element through two levels of optical isolation. The interfacing of low level digital circuitry to a pulse power environment is discussed, as well as the design and performance of the total system.

Cost and manufacturing details are important in a project of this size. The projected cost goal of 27c/joule, installed and operating, has been met. The general approach to the design, transient analysis, manufacture, and activation of this large power conditioning system is also discussed.

---

*Research performed under the auspices of the U.S. Energy Research and Development Administration under Contract No. W-7405-ENG-48.

INTRODUCTION

The Shiva laser is a twenty arm Nd:glass laser fusion facility currently in the final phases of activation at the Lawrence Livermore Laboratory. A model of this facility is shown in Figure 1. The laser is designed to explore advanced concepts in inertial confinement fusion and it is anticipated that thermonuclear energy release equal to one per cent that of the incident light will be achieved with sub millimeter size deuterium-tritium targets.

To achieve these experimental goals, the laser must produce an output energy in excess of 10 kJ with a pulse length of less than one nanosecond.

A 25 MJ energy storage system with a peak output power capability of 45,000 megawatts is required to supply the pump energy for the laser. This paper describes the design, construction and debugging of this pulsed power system.

ENERGY REQUIREMENTS

The laser consists of 20 identical, parallel arms with each arm containing a number of disk amplifiers, rod amplifiers and Faraday rotators. Figure 2 shows the staging of these elements and the energy required for each of them.

Over 85% of the total energy is used for pumping the disk amplifiers where the quantum states of the Nd:atoms are excited with intense broadband light output from large bore xenon flashlamps.

The remainder of the energy is used to establish magnetic fields in the Faraday rotator glass. These rotator coils are simple inductive loads with time constants in the millisecond regime.

Pump energy is delivered to the flashlamps in approximately 500 microseconds and the peak power requirements far exceed the capacity of the power grid. Thus, a large capacitor bank is used as the intermediate storage element necessary to time compress this energy by five orders of magnitude - that is, the 25 megajoules is taken from the grid over a period of 60 seconds and delivered to the loads in less than one millisecond.

FLASHLAMP LOADS

The xenon flashlamps used to pump the disk amplifiers are 1.1 m long, 15 mm diameter, and are filled with xenon gas at a pressure of 300 torr. The wall material is cerium-doped quartz. The desirability of cerium doping can be seen from Figure 3. This figure shows lamp output spectra for both clear-fused and cerium-doped quartz walls, together with the major pump bands for neodymium. It can be seen that the cerium-doped quartz spectrum cuts off sharply in the UV region but still has considerable output over most of the main pump bands for neodymium. This reduction of output in the UV region is highly important because much potential damage can occur within the optical cavities as a result of UV interaction with small dust particles.

The lamps are non-linear resistive loads with two distinctly different impedance states - roughly corresponding to the time during which the lamps are in the ionization or triggering mode and the time at which the full volume of the lamp is conducting current. Voltage and current waveforms for a lamp pair are shown in Figure 4. As shown, a high voltage pulse (25 to 35 kV) is required to initiate the ionization process. After the full volume of the lamp is ionized, the voltage and current are related by the non-linear relationship

$$V = KI^{B}$$

where K is a constant determined by the geometry and gas fill pressure of the lamp. The exponent B is approximately 0.5 at current maximum. The peak current is in the order of 4 kA and the peak voltage drop at current maximum is 10 kV.

FLASHLAMP ENERGY STORAGE MODULE

Two 44" lamps are driven in series and each series pair is driven by a capacitor module that is tailored to provide the required energy and pulse shape. The module (Figure 5) is comprised of a number of energy storage capacitors, a pulse forming inductor, a high voltage isolating fuse and appropriate charging and discharging resistors. It is assembled as a unit on a metal tray and can be installed or removed from the mounting racks with a modified fork lift as shown in Figure 6. A spark gap is placed across each pulse forming inductor to protect against fault generated, high voltage transients. A knife switch is included as an integral part of the capacitor bus bars in order to allow the module to be isolated and shorted for personnel safety.

The modules are mounted in racks seven shelves high, located in the basement underneath the laser. Figure 7 shows a segment of the capacitor bank as installed in the Shiva basement.

SWITCHING AND DISTRIBUTION

The energy storage modules are charged and switched in parallel segments using the circuit configuration shown in Figure 8. Here, 32 modules are charged from a common power supply and switched with a single size D ignitron switch assembly. The only impedance common to the circuit branches is the small inductance and resistance of the switch structure.

Thus, the current in each branch is a function of the voltage and impedance of only that branch. The number of parallel branches is limited by the Coulomb rating of the ignitrons, and our experience shows that this limit is about 60 Coulombs for the size D tubes. This is equivalent to switching 3,000 microfarads at 20 kV or 32 branches of 87 microfarads each (≧ 600 kJ). Generally more than one 32-circuit group is charged from a single supply and isolating diodes and fuses are included at the supply as shown in Figure 8.

The transient equivalent circuit referred to a single branch is shown in Figure 9. C1 is the parallel combination of energy storage capacitors and C2 and C3 are the bushing to case capacitances associated with C1. The capacitor cases are tied to the coax shields through damping resistor R2. This allows the displacement currents from C2 and C3 to be contained coaxially and damped by R2.

The initial high voltage overshoot required for lamp ionization is generated by allowing the combination of lamp capacitance C6, cable capacitance C5 and inductance L2 to resonate at about 160 kHz. The Q of this circuit, and thus the peak overshoot voltage, is set by adjusting the value of damping resistor R3.

At the onset of each charging cycle, the capacitor bank presents a short circuit impedance to the charging power supplies. Current limiting is therefore an important and necessary aspect of the design.

The three-phase voltage doubler circuit (Figure 10) provides both the aspects of constant current charging and current limiting. As shown, C2 is the bank capacitance (generally on the order of a few thousand microfarads) and C1 is the series doubling capacitance (approximately one microfarad). The peak output current is limited by the reactance of C1.

The time required to charge C2 to the desired voltage Vo is -

$$t = \frac{-\ln\ 1 - (V_o/2V_p)}{3F \ln(\alpha + 1)}$$

where

t = charge time in seconds

V_p = Peak line to neutral secondary voltage

F = Line frequency (60 Hz)

α = C1/C2

Thirty-two of these supplies are installed to charge the 25 MJ bank to a nominal voltage of 20 kV in approximately 60 seconds. These are shown in Fig. 11.

The supplies are voltage regulated to .1 in order to insure the repeatability of output energy from the laser on a shot to shot basis. The regulator operates in a bimodal fashion in that the primary SCR's act as contactors until the bank voltage is near final value. At this time, the regulator switches to a phase control mode and holds the output voltage constant.

GROUNDING, SAFETY AND FAULT CONSIDERATIONS

Safety is a foremost consideration in the pulse power system design. Although the hazards of similar high voltage capacitor banks developed for the C.T.R. and accelerator communities are well known, these banks present new and unique problems.

The banks are required to deliver energy to a large number of loads distributed throughout the laser bay. Thus, potentially hazardous voltage and energy levels are extended to almost every point in the laser room. A good deal of thought was given to the problems of routing and terminating the high voltage coax cables from the bank to the flashlamp and Faraday rotator loads.

Coaxial symmetry is maintained throughout the pulse power circuitry in order to reduce electro-magnetic radiation and displacement currents. In addition, a grounding scheme has been implemented which minimizes the possibility of high energy faults extending outside the pulse power environment.

Figure 12 shows the basic elements of this grounding scheme. The flashlamps and their associated reflectors in each of the amplifiers are insulated from the amplifier cases and tied to the shield of the coax cable from the bank. The shields are in turn tied to the pulse power ground bus which is insulated from the laser space frame and connected directly to the substation ground. This arrangement establishes the lamp reflector as an electrostatic shield between the pulse power circuity and the laser space frame, as well as providing a well defined path for fault and displacement currents that are insulated from the space frame.

This has proven to be an effective approach in that the many low level diagnostic and control circuits which are located in close proximity to the pulse power loads operate reliably and are not affected by pulse power noise.

CONTROL SYSTEM

A large number of tasks must be executed by the control system in the course of supervising the operation of the pulse power system. In addition, a large volume of system status information is collected, stored and displayed for each target shot. By necessity, the control interface circuitry is located in close proximity to the pulse power equipment where high levels of electrical noise exist. This combination of functional requirements and severe operational environment presented a difficult design task. On the one hand, the functional requirements are well suited to digital based control system technology, while, on the other hand, a pulse power involvement is a hazardous place to locate low level digital circuitry. For Shiva, we have designed and implemented a digital based control system with a high degree of electrical noise immunity.

The design is shown in block diagram form in Fig. 13. Redundant LSI-11 microprocessors address each control or diagnostic function by way of a parallel data bus. Each system element is assigned a unique digital address and these addresses are simply extensions of the internal memory space of the LSI-11. Bus interface units serve to provide common mode isolation and transfer digital information between the data bus and each element of the control or diagnostics.

The LSI-11's are isolated from the data bus at a level of 60 kV and the bus interface units are isolated input to output at a level of 3.5 kV.

We have a good deal of operating experience with this system and it is performing well.

BUDGET AND SCHEDULE

The target cost goal of 27c/joule (1977 dollars) has been achieved for the operating system. A cost breakdown for the pulse power system is shown in Fig. 14. Those components and sub-assemblies with high cost leverage were subjected to intense manufacturing and cost engineering analysis in order to insure that the system would be completed within the alloted resources.

In general, almost all components and sub-assemblies were manufactured by outside industry on fabrication contracts. The final assembly of the system was carried out on a small production line at the site using contract technician labor.

Construction was scheduled and carried out over an 18 month period and has in fact proceeded well within the original plan.

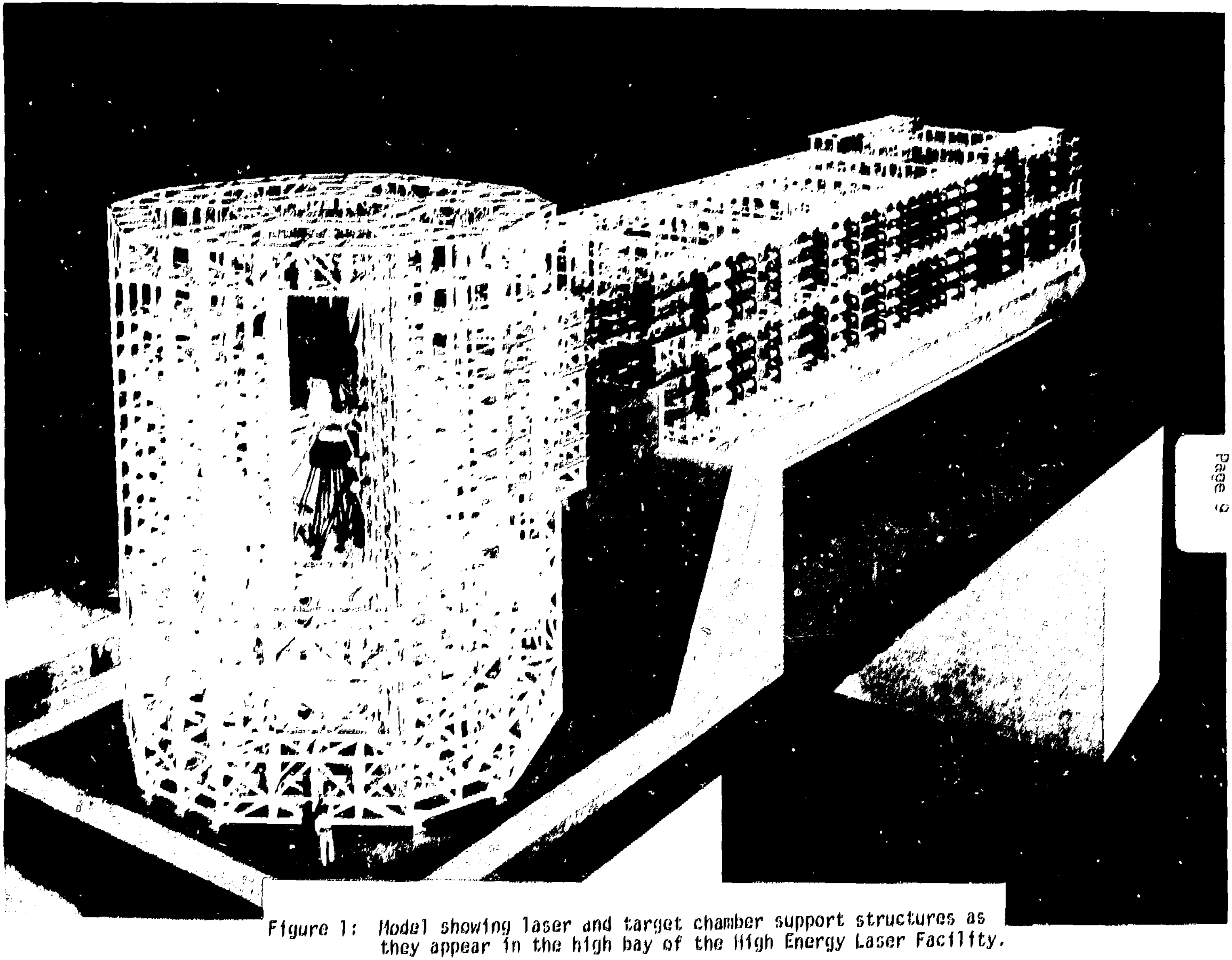

Figure 1: Model showing laser and target chamber support structures as they appear in the high bay of the High Energy Laser Facility.

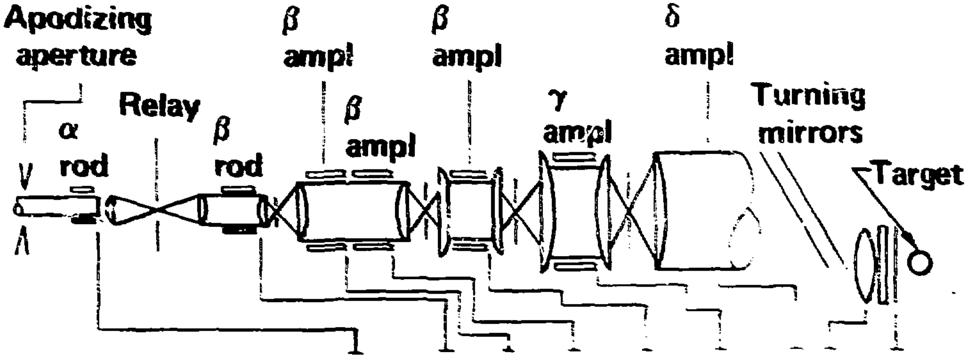

Power @ 100 ps (GW)	1.5	15	47	173	530	1100		1500
Power @ 1 ns (GW)	1	10	30	100	250	520		750
Bank energy (kj)			150	150	150	270	280	
Clear aperture (mm)	23	46	34	94	94	150	208	
F-No.	30	10		10	10	10		6

Figure 2: Optical profile of a single Shiva laser chain. Representative values of laser power are given for 0.1 and 1 ns pulses at each stage. Also shown is the clear aperture of each amplifier and the electrical energy supplied to the flashlamps.

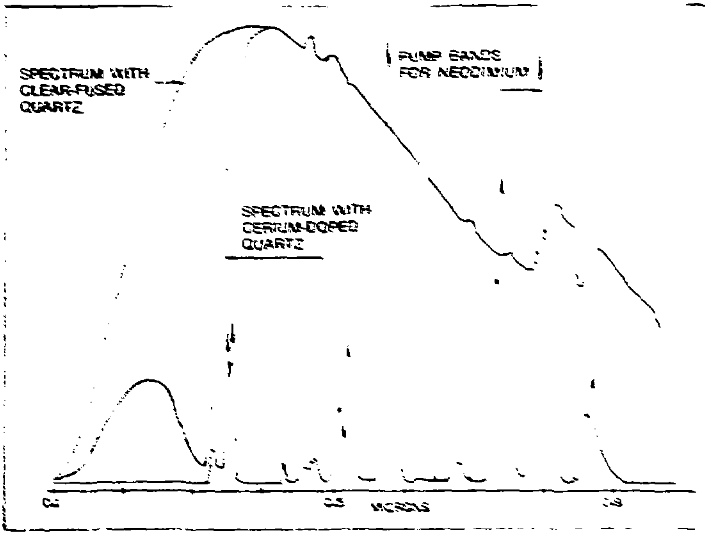

Figure 3: Xenon flashlamp spectra for walls of clear-fused and cerium-doped quartz. Note the pumping bands for neodymium.

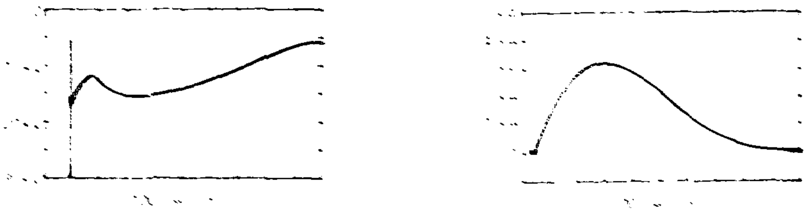

Figure 4: Typical voltage (a) and current (b) waveforms for flashlamps.

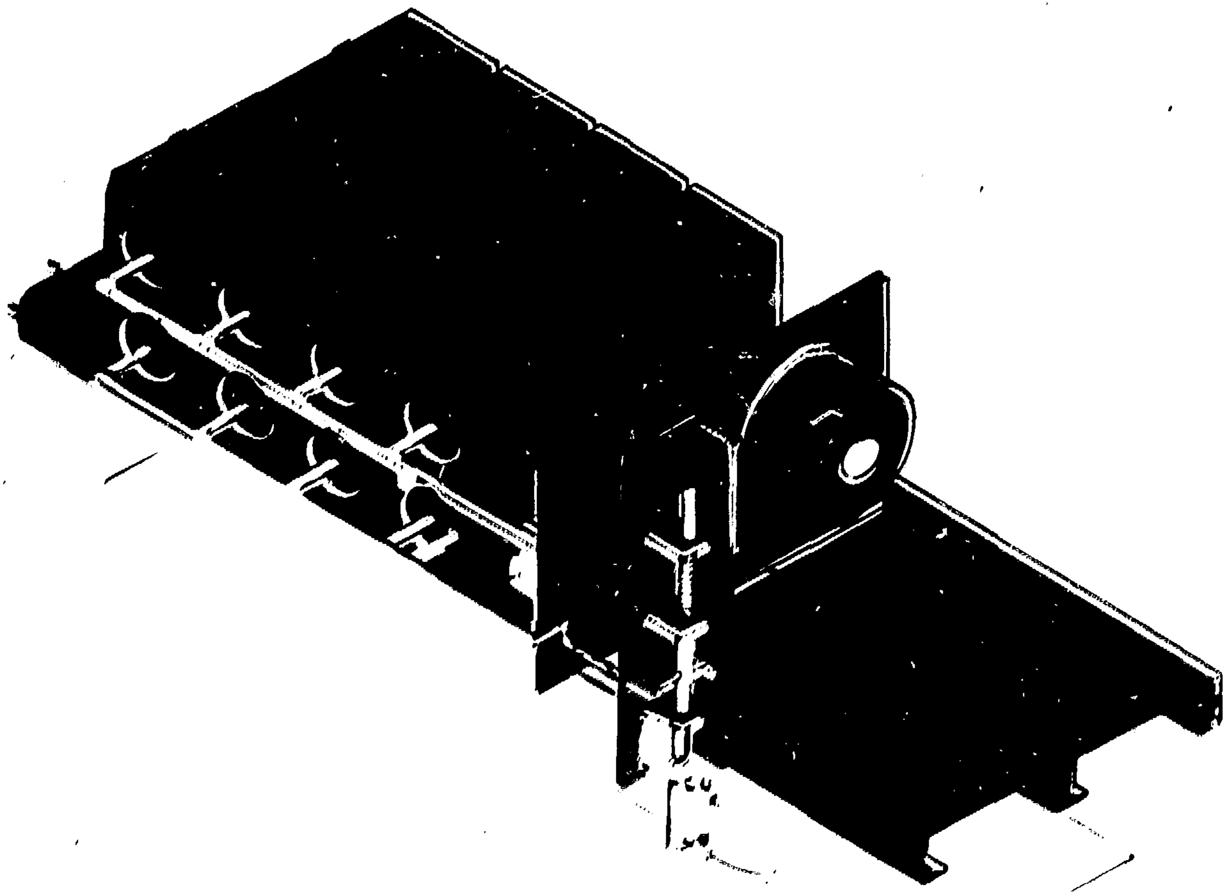

LAWRENCE
LIVERMORE
LABORATORY

Figure 5: Capacitor module each series pair flashlamp load is driven by a module as shown above. Over 1200 such modules were produced for the Shiva laser.

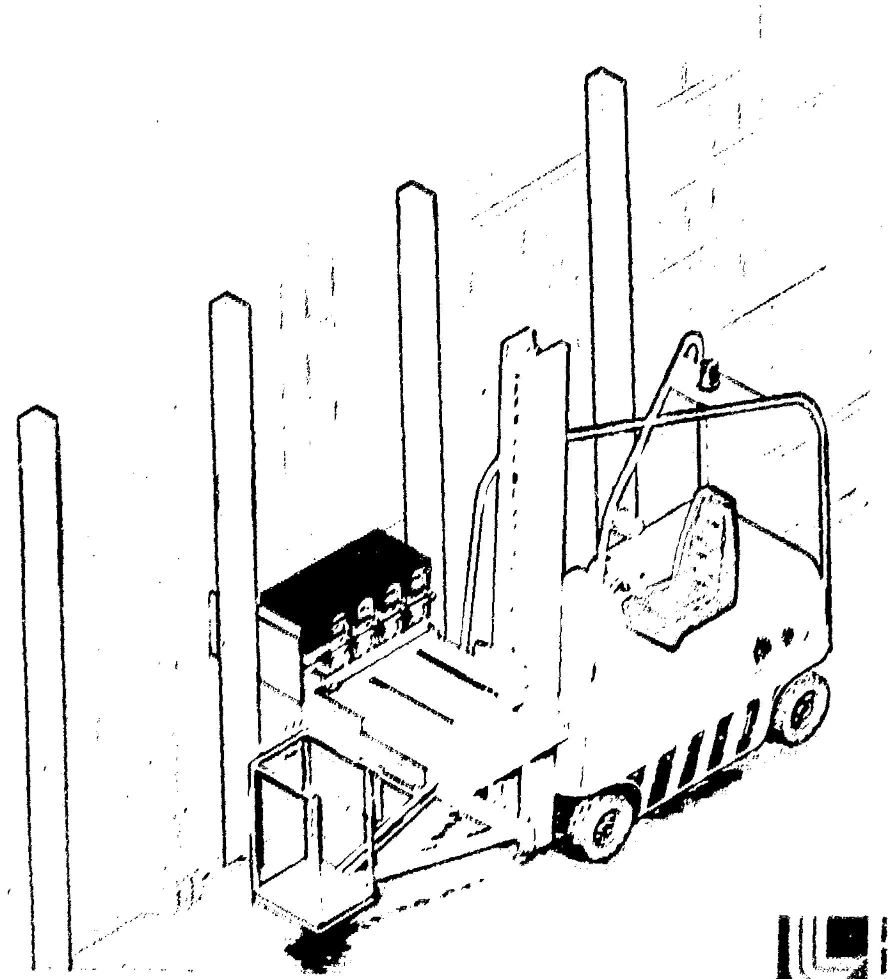

Figure 6: Modules are installed or removed from the mounting racks with a modified fork lift truck as shown above.

LAWRENCE
LIVERMORE
LABORATORY

Figure 7: Shown is a segment of the 25 MJ energy storage system as installed for the Shiva laser.

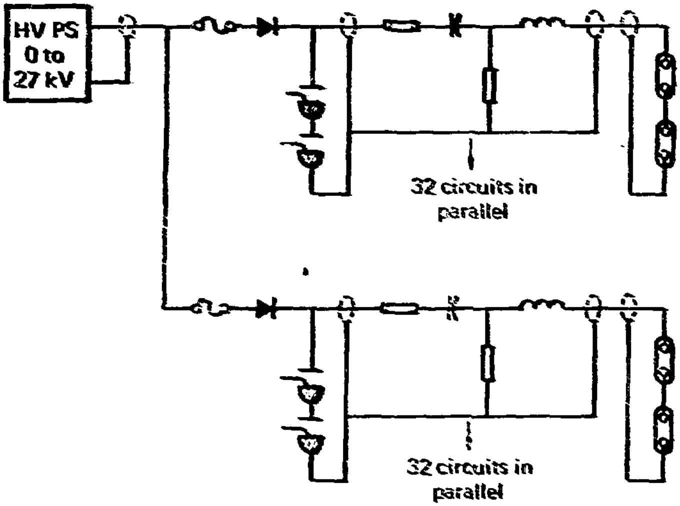

Figure 8: Energy storage modules are charged and switched in parallel. If more than one group of modules is charged from a common supply, isolating fuses and diodes are used as shown.

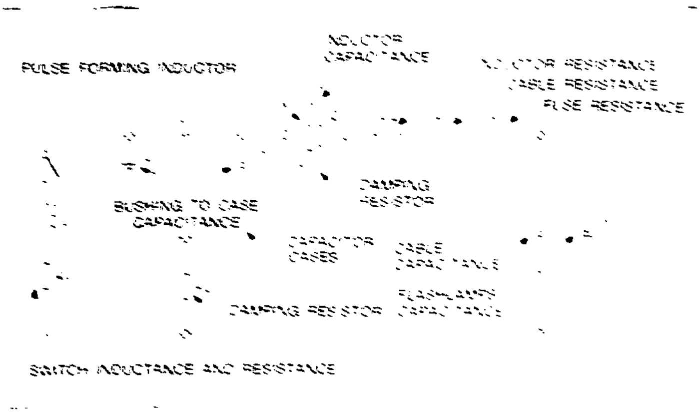

Figure 9: Transient equivalent circuit for a single energy storage module.

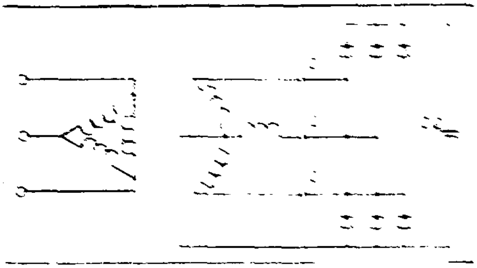

Figure 10: Simplified schematic of the three phase voltage doubler circuit.

Figure 11: Voltage doubler power supplies as installed in the Shiva system.

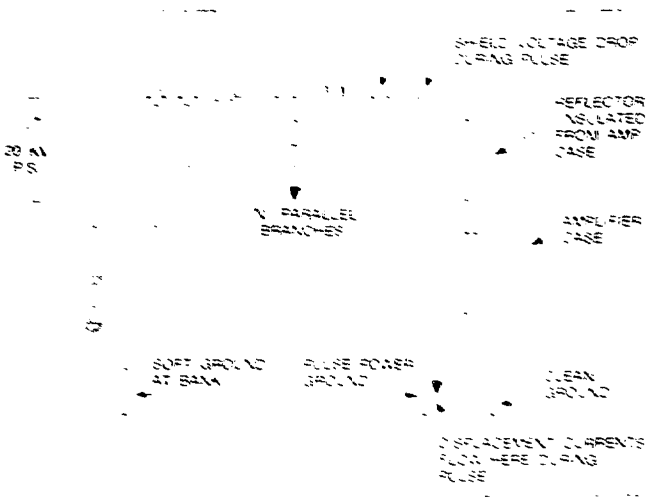

Figure 12: Grounding scheme for the pulsed power system. Flashlamp reflectors act as electrostatic shields between the high voltage circuitry and the laser space frame.

POWER CONDITIONING CONTROL SYSTEM — HOW IT DOES IT

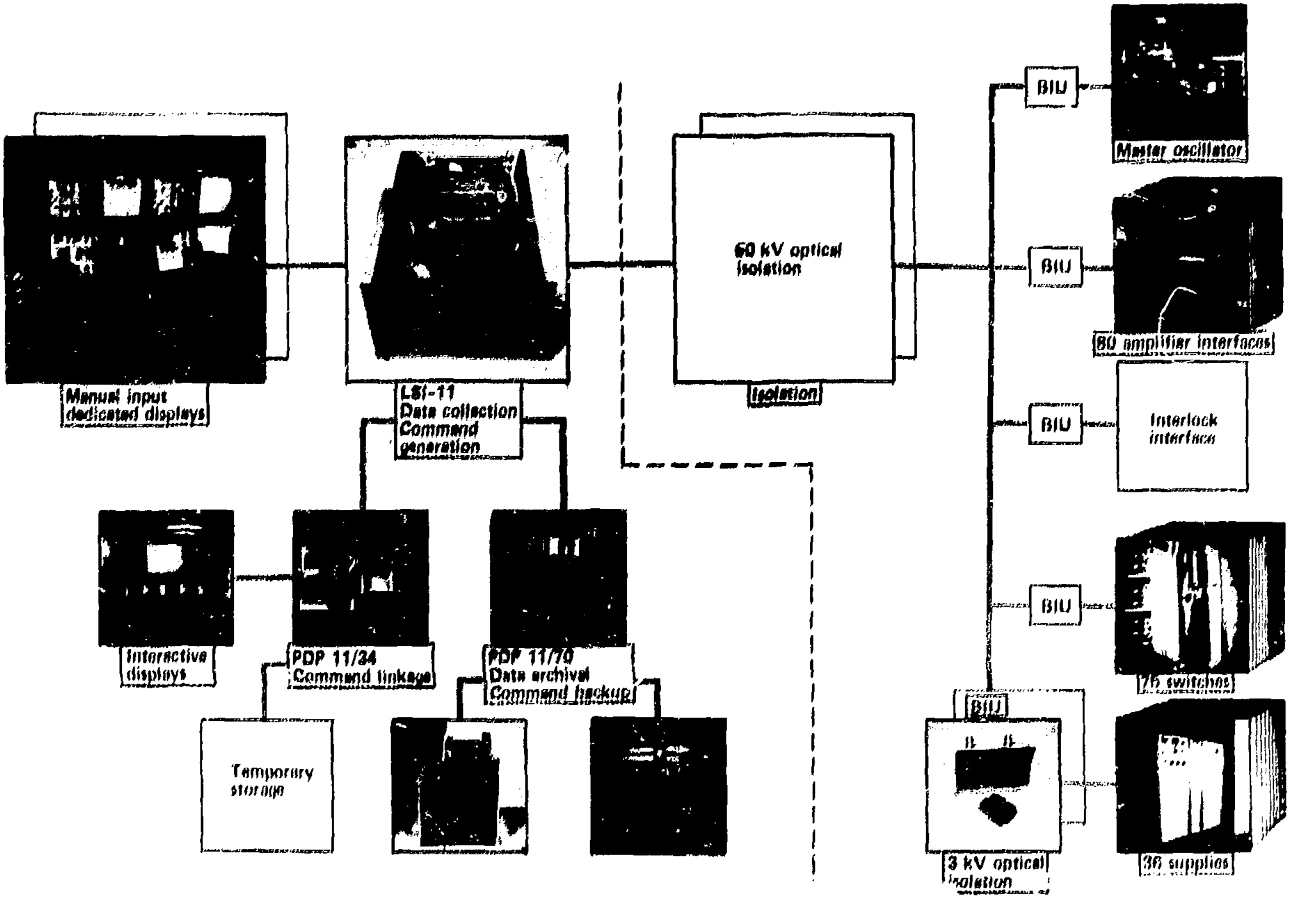

Figure 13: A digital based control system is used for the Shiva pulsed power elements. Two levels of optical isolation are employed to provide high noise immunity.

Component	Cost Cents/Joule
Energy Storage Modules	15.4
Flashlamps	3.9
Controls, Diagnostics and Interlocks	[illegible].5
Power Supplies	1.9
H.V. Cabling	1.3
Ignitron Switches and Triggers	.37
H.V. Junction Boxes	.57
Bank Dump Hardware	.5
Total	27.19

Figure 14: A cost breakdown for the pulse power system is shown. The target cost of 27 cents/joule was achieved for the 25 MJ installation.