228 py
2/10/68

DR-424

OAK RIDGE NATIONAL LABORATORY

operated by
UNION CARBIDE CORPORATION

for the
U.S. ATOMIC ENERGY COMMISSION

ORNL-NSIC-26
UC-80 — Reactor Technology

MASTER

TESTING OF CONTAINMENT SYSTEMS USED WITH LIGHT-WATER-COOLED POWER REACTORS

Frank C. Zapp

NUCLEAR SAFETY INFORMATION CENTER

NSIC

Printed in the United States of America. Available from Clearinghouse for Federal Scientific and Technical Information, National Bureau of Standards, U.S. Department of Commerce, Springfield, Virginia 22151
Price: Printed Copy $3.00; Microfiche $0.65

ORNL-NSIC-26

Contract No. W-7405-eng-26

Nuclear Safety Information Center

TESTING OF CONTAINMENT SYSTEMS USED WITH LIGHT-WATER-COOLED POWER REACTORS

Frank C. Zapp

AUGUST 1968

OAK RIDGE NATIONAL LABORATORY
Oak Ridge, Tennessee
operated by
UNION CARBIDE CORPORATION
for the
U.S. ATOMIC ENERGY COMMISSION

THIS PAGE

WAS INTENTIONALLY

LEFT BLANK

FOREWORD

The recent surge in the building of large nuclear power plants, particularly with the projected desirability of using urban sites for such installations, has focused attention on many aspects of the AEC's responsibilities for licensing reactors and insuring the public safety. Since the industry is "young," meaningful, long-term operating experience is sparse and the definition of the possible accident spectrum, as well as a set of firm design requirements, is subject to a largely analytical approach that necessarily involves conservative judgments. As plant designs become standardized and operating experience on the newer large reactors is gained, the inevitable process of refinement and of acquiring confidence in the operation of the plants will occur. This relatively slow evolutionary approach to acquiring firm design standards and criteria is not felt to be conducive to achieving the great national benefits of atomic energy within a reasonable time, in terms of the conservation of resources, combating air pollution, and the multitude of gains resulting from low-cost electricity.

As part of the effort to improve on this approach, the Regulatory Review (Mitchell) Panel recommended the formation by the AEC of a Steering Committee on Reactor Safety Research to coordinate the needs of the Regulatory Program with the direction of the safety research and development programs. This committee, in turn, recommended that several studies be undertaken to provide guidance for the research and development projects, and this was, in turn, implemented by the AEC Division of Reactor Development and Technology into the series of discussion reports herein described. It was intended that these reports provide a comprehensive assessment of the present status of specific aspects of nuclear safety and, by identifying accepted technology and the technology needing further experimental verification, that they enhance the understanding and confidence in this new industry.

Accordingly a number of the safety aspects of large light-water power reactors were selected by the AEC* as subjects for detailed study to

*Letter from Milton Shaw (Director, AEC Division of Reactor Development and Technology) to ORNL, March 28, 1966.

ascertain whether gaps in knowledge exist and where a research and development program could be of benefit. The subjects selected cover many of the areas for which inadequate factual bases exist and in which research that duplicates expected conditions is very difficult to perform. In general the subjects are in areas considered critical in the safety analysis of power reactor installations. Eight subjects were identified and a state-of-technology type of discussion report was prepared on each. The reports, which are directed primarily toward a technical-management audience, generally compare existing or planned plant applications with what is capable of being done at this time. Such comparisons have helped to identify inadequacies in assumptions, available data, or general basic knowledge so that, together with the opinions of experts in a particular field, areas of meaningful research and development have been identified.

This report is one of the series of eight companion reports listed below:

Title	Author	ORNL-NSIC No.
Missile Generation and Protection in Light-Water-Cooled Power Reactor Plants	R. C. Gwaltney	22
Potential Metal-Water Reactions in Light-Water-Cooled Power Reactors	H. A. McLain	23
Emergency Core-Cooling Systems for Light-Water-Cooled Power Reactors	C. G. Lawson	24
Air Cleaning as an Engineered Safety Feature in Light-Water-Cooled Power Reactors	G. W. Keilholtz, C. E. Guthrie, and G. C. Battle, Jr.	25
Testing of Containment Systems Used with Light-Water-Cooled Power Reactors	F. C. Zapp	26
Review of Methods of Mitigating Spread of Radioactivity from a Failed Containment System	R. C. Robertson	27
Earthquakes and Nuclear Power Plant Design	T. F. Lomenick and C. G. Bell	28
Protection Instrumentation Systems in Light-Water-Cooled Power Reactor Plants	C. S. Walker	29

Although not specifically one of this series, a related discussion report on reactor pressure vessels, ORNL-NSIC-21, edited by G. D. Whitman, G. C. Robinson, and A. W. Savolainen, has also been prepared at ORNL.

The general approach in the preparation of these reports was to select a primary author-investigator knowledgeable in the subject area and to establish committees of experts to review the work at several stages during its preparation. Review groups were formed both from within ORNL and outside. The external review committee members were drawn principally from other national laboratories, universities, and private research institutes — in all, 52 individuals participated and are identified in the reports. In some cases, part of the material used was developed and/or written by a subcontractor, who is similarly identified. In all cases, correspondence and/or visits were made to many sources of information, particularly to reactor operators, suppliers, architect-engineers, and public utilities, as well as to the appropriate national laboratories. This wide use of acknowledged experts was made in an attempt to include their opinions and knowledge toward the ultimate goal of achieving, through intensive research and development programs, well-defined design criteria to insure the public health and safety and to maintain a viable nuclear power industry. However, in all instances the authors have expressed conclusions and recommendations that reflect their own judgment and not that of any particular group, such as the AEC, reactor designers, or utilities.

In most subject areas more information was developed than it has been possible to include in the body of the reports prepared in this series. In some instances, such information has been included in the appendices and in other instances this information will be included in more technically oriented reports to be published in the near future. In addition, it is expected that additional discussion reports will be written on some of the many other safety aspects of large water-cooled reactors, as well as other types of reactors as they come into wider usage.

J. W. Michel
Coordinator, Discussion Papers
Oak Ridge National Laboratory

Wm. B. Cottrell
Director, Nuclear Safety Program
Oak Ridge National Laboratory

THIS PAGE

WAS INTENTIONALLY

LEFT BLANK

PREFACE

The Nuclear Safety Information Center was established in March 1963 at the Oak Ridge National Laboratory under the sponsorship of the U.S. Atomic Energy Commission to serve as a focal point for the collection, storage, evaluation, and dissemination of nuclear safety information. A system of keywords is used to index the information cataloged by the Center. The title, author, installation, abstract, and keywords for each document reviewed is recorded on magnetic tape at the central computer facility in Oak Ridge. The references are cataloged according to the following categories:

1. General Safety Criteria
2. Siting of Nuclear Facilities
3. Transportation and Handling of Radioactive Materials
4. Aerospace Safety
5. Accident Analysis
6. Reactor Transients, Kinetics, and Stability
7. Fission Product Release, Transport, and Removal
8. Sources of Energy Release Under Accident Conditions
9. Nuclear Instrumentation, Control, and Safety Systems
10. Electrical Power Systems
11. Containment of Nuclear Facilities
12. Plant Safety Features
13. Radiochemical Plant Safety
14. Radionuclide Release and Movement in the Environment
15. Environmental Surveys, Monitoring and Radiation Exposure of Man
16. Meteorological Considerations
17. Operational Safety and Experience
18. Safety Analysis and Design Reports
19. Bibliographies

Computer programs have been developed that enable NSIC to (1) produce a quarterly indexed bibliography of its accessions (issued with ORNL-NSIC report numbers); (2) operate a routine program of Selective Dissemination of Information (SDI) to individuals according to their particular profile of interest; and (3) make retrospective searches of the references on the tapes.

Other services of the Center include principally (1) preparation of state-of-the-art reports (issued with ORNL-NSIC report numbers); (2) cooperation in the preparation of the bimonthly technical progress review, Nuclear Safety; (3) answering technical inquiries as time is available, and (4) providing counsel and guidance on nuclear safety problems.

Services of the NSIC are available without charge to government agencies, research and educational institutions, and the nuclear industry. Under no circumstances do these services include furnishing copies of any documents (except NSIC reports), although all documents may be examined at the Center by qualified personnel. Inquiries concerning the capabilities and operation of the Center may be addressed to

J. R. Buchanan, Assistant Director
Nuclear Safety Information Center
Oak Ridge National Laboratory
Post Office Box Y
Oak Ridge, Tennessee 37830
Phone 615-483-8611, Ext. 3-7253
FTS 615-483-7253

ACKNOWLEDGMENTS

Appendix A contains a listing of persons who have in some way contributed information and/or assistance in preparing this report. Their helpfulness is gratefully acknowledged.

Special thanks are due the external Review Committee members, R. O. Brittan – Argonne National Laboratory, G. J. Rogers – Pacific Northwest Laboratories, and R. N. Bergstrom – Sargent & Lundy; the internal ORNL Review Committee members, W. R. Gall, F. T. Binford, and C. G. Robinson; N. K. Sowards – Phillips Petroleum Company; R. R. Maccary – AEC Division of Reactor Standards; members of the ORNL Reactor Division, W. B. Cottrell, J. W. Michel, S. E. Beall, and J. R. Buchanan and the Staff of the Nuclear Safety Information Center.

R. O. Brittan, G. J. Rogers, G. C. Robinson, R. R. Maccary, J. A. Hinds, and J. W. Michel have been especially helpful during the preparation of this report.

THIS PAGE

WAS INTENTIONALLY

LEFT BLANK

CONTENTS

ABSTRACT

An evaluation of the testing of containment systems used with light-water-cooled nuclear power reactors was made through discussions with members of the nuclear power industry and studies of published literature, reports of leakage-rate tests, technical specifications, and information available in preliminary and final safety analysis reports and their supplements. Conclusions are presented relative to leakage-rate test results, continuous leakage-rate monitoring, and developments that may affect future testing requirements. Also, recommendations are made relative to proposed codes, standards, and guides; isolation-valve testing; containment air-cooling and spray systems testing; and containment systems testing research programs.

The studies indicated that integrated leakage-rate test results are not currently being reported in a manner that is conducive to comparisons between plants or to an independent evaluation of the errors involved. In most cases there is insufficient information presented in the leakage-rate test reports to adequately support the degree of accuracy claimed or to give confidence in the leakage result reported. The majority of the errors are the result of inadequate precision of the test equipment used, inadequate test equipment calibration, and (more significantly) poorly designed sampling techniques. A major need appears to be that of providing guidelines for correctly defining the leakage-rate tests so that the accuracy and significance of the results can be predicted before the test is run.

The technology of containment systems testing is relatively well developed, but additional research and analysis is warranted to (1) improve leakage-rate testing accuracy and reliability, (2) to correlate leakage under test conditions with that expected under accident conditions, (3) improve and develop continuously monitoring integrated-leakage and/or leakage-rate surveillance systems, (4) investigate methods of continuously monitoring all containment engineered safety features, and (5) provide realistic and meaningful procedures for testing the capability and reliability of reactor containment engineered safety features under accident conditions.

SUMMARY

This report on Containment Systems Testing is one of a series prepared by the Oak Ridge National Laboratory at the request of the USAEC's Division of Reactor Development and Technology as part of their continuing program to review the safety aspects of light-water power reactor technology in order to determine where additional research and analysis would be useful. A substantial body of containment and associated systems design and operating experience has been accumulated for existing power reactors, and a comprehensive research program is being conducted, primarily in the Containment Systems Experiment at the Pacific Northwest Laboratories of the Battelle Memorial Institute. Containment technology is presently in a state of transition to designs for which no experience exists (prestressed concrete, new pressure-suppression devices, etc.) and the research programs will inevitably lag behind the changing technology.

An attempt is made in this report to relate the information gained from the experience to date to the information researchers hope to gain from test programs currently under way. This is done by discussing applicable codes, standards, and guides; testing techniques, experience, and current practice; administrative considerations; and the containment research programs that involve some degree of containment systems testing research. The discussion of testing techniques, experience, and current practice includes consideration of containment system strength tests, integrated leakage-rate tests, and leakage-surveillance tests, as well as testing of related engineered safety features. The discussion of containment systems testing research deals with the Containment Systems Experiment, the Loss of Fluid Test Program, and the In-Plant Test Program proposed for the Carolinas-Virginia Tube Reactor. On the basis of these discussions it is concluded that the technology of containment systems testing is relatively well developed but that additional research and analysis are warranted to (1) improve leakage-rate testing accuracy and confidence in test results, (2) to correlate leakage under test conditions with that expected under accident conditions, and (3) to provide realistic and meaningful procedures for testing the effectiveness and reliability

of reactor containment engineered safety features under postaccident conditions.

Testing requirements have not been developed for the new large [800–1000 Mw(e)] nuclear plants because the preliminary safety analysis reports require only statements of intent to satisfy AEC design criteria. In most cases this type of information, including testing procedures, is not available until the later stages of design and is therefore currently being developed and reviewed. The CVTR In-Plant Test Program was recently modified and realigned to emphasize testing of containment system response to simulated design-basis-accident conditions.

It is concluded that leakage-rate test results are not currently being reported in a manner conducive to comparisons between plants or to an independent evaluation of the errors involved. In most cases there is insufficient information presented in the leakage-rate test reports to support the degree of accuracy claimed or to give confidence in the leakage result reported. The majority of the errors are the result of inadequate precision of the test equipment used, inadequate test equipment calibration, and (more significantly) poorly designed sampling techniques. A major need appears to be that of providing guidelines for correctly defining the leakage-rate tests so that the required accuracy and significance of the results can be predicted before the test is run.

Recommendations are made relative to specific ways in which the current testing methods and research programs can be improved. Consideration should be given to providing additional government support of the work being done to develop codes and standards consistent with today's technology in order to decrease the time required to develop these important documents. Consideration should be given to testing the heat transfer capability and design performance of a typical air-cooling system in a simulated accident atmosphere. Design performance tests of a typical containment spray system under accident atmospheric conditions should also be conducted. Plans have been made by the PA&ET Branch of the Phillips Petroleum Company to perform tests of this type in the Carolinas-Virginia Tube Reactor. Reactor plant design and construction contractors should test their actual containment air-cooling systems under simulated accident conditions prior to installation in the reactor plant.

It is also recommended that the actual containment spray systems be tested. This could be done early in the construction schedule prior to the installation of equipment that could be damaged.

The subject of isolation-valve testing has been handled to date in a rather haphazard manner compared with the way other aspects of containment systems testing have been approached. It is considered that this area requires additional technical and regulatory effort, and work should be initiated to develop and standardize methods of performing isolation-valve tests.

Periodic integrated leakage-rate tests at relatively high pressure (usually 50% of design basis accident pressure) are now used to verify the allowable test leakage rates specified in technical specifications. The test results verify to the AEC Compliance Division that the leakage rate is within the prescribed limits only at the time of the test, and there is no guarantee that within a week or month there may not be a tenfold increase in leakage rate.

Continuous integrated leakage-rate testing at relatively low pressure is an extremely valuable tool, since it increases the assurance of both the reactor operator and the AEC that the health and safety of the public are being protected on a continuous basis. A continuously monitoring system of this type can be instrumented to immediately indicate any major leaks and to disclose minor leaks in a relatively short period of time. The level of containment leakage-rate integrity, however, will be related to the accuracy of the technique used, and it will not be possible to confirm that the containment system is meeting the technical specifications if the leakage rate specified is below the threshold of detection of the continuous monitoring system.

Research and development programs of both the AEC and industry should investigate ways to (1) improve existing continuous leakage-monitoring techniques to insure that containment integrity (to as great a degree as possible) is being maintained at all times and (2) develop new techniques. If possible, continuous monitoring methods should be developed to insure that all containment engineered safety features will function reliably and effectively following a loss-of-coolant accident.

It appears that the Absolute Method of integrated-leakage-rate testing will be utilized for many future large power reactor containment systems. The use of large metallic-lined concrete-encased structures with their inherent stable temperature conditions is a major factor in the selection of this method, as well as the simplicity of test preparation and instrumentation, savings in time, and lower overall cost.

There is a need to standardize the terminology used in the safety analysis reports, the technical specifications, and in the leakage-rate test reports. It is recommended that the terminology used in AEC Technical Safety Guide III, "Reactor Containment Leakage Testing and Surveillance Requirements," be adopted throughout the industry and that the leakage rates be reported in specific terms, as outlined in Section 3.5 of this report.

1. INTRODUCTION

1.1 Purpose and Scope

The tests that are performed on pressurized- and boiling-water nuclear power reactor containment systems to assure initial and continuing integrity and operability of these systems are discussed in this report, and an attempt is made to present a clear picture of the current state-of the art of containment systems testing in order to identify those areas where additional research and development are needed. The subject is introduced by first defining containment systems and describing the basis for establishing allowable leakage rates. The purpose of containment systems testing and the codes, standards, and guides used in performing such tests are then discussed.

Testing techniques, experience, and current practice are described. The categories of tests include strength tests, integrated and local leakage-rate tests, tests associated with equipment and devices that establish containment boundaries, and tests of certain engineered safety features. The administrative considerations associated with conducting these tests are described briefly. The final, and very important, section of this report discusses the research and development work currently being undertaken in the field of containment systems testing.

Because of the large amount of material already published on the containment of nuclear reactors and the short time available to complete a discussion report on the subject of containment testing, liberal use was made of the information contained in available publications. The publication "U.S. Reactor Containment Technology"[1] for example, presents an exhaustive study of this field and frequent references to sections in that document are made. Discussions with members of the nuclear power industry, including utilities, reactor manufacturers, the AEC, and architect-engineers and constructors regarding containment testing, as well as published reports of tests and information available in preliminary and final safety analysis reports and their supplements, were also considered. A basic ground rule excluded the use of proprietary information.

Power plant owners and operators are primarily interested in producing as much power as possible and maintaining a high plant availability factor; therefore they are interested in minimizing containment system testing on a shutdown basis. Downtime costs can be as high as $50,000 per day for large power plants, and thus there is an incentive to reduce the time required for containment testing and surveillance, consistent with maintaining safe plant operation. Enthusiasm for further development of in-service (during plant operation) testing can be expected from industry, although downtime testing will also be required for correlation.

Some operating organization representatives feel that the subject of leakage-rate testing has been overemphasized; although postaccident dose rates to the environs are a function of (1) activity concentration in the contained atmosphere, (2) containment leakage rate, and (3) reduction factors for atmospheric dispersion and dilution. The claim is made that since there are large uncertainties in factors (1) and (3), the present emphasis on containment testing appears to be out of line. Since the containment structure can be seen and its leakage rate measured, it is "beaten to death" in an attempt to allay the fears of a nuclear accident. While this may be the attitude of some, the safety of the public is a prime consideration, and as long as containment systems are incorporated in plant designs an effort must be made to insure that the intended design features are operable at all times. Testing is essential to this objective.

A number of related subjects are not discussed in this report, either because they are being discussed in separate reports (see Foreword) or because they are outside the scope; for example, containment system construction, research and development work on new containment concepts or systems, monitoring containment pressure-suppression engineered safety features, etc.

1.2 Containment Systems

In this report "containment system" is defined as the reactor containment structure and the appurtenant engineered safety feature systems and components provided to maintain its integrity. Provisions for initial

and future testing of containment systems must be made to assure that the systems are continuously capable of adequately containing any radioactive materials that may be released from the primary systems during the reactor operating lifetime. The containment system includes a basic envelope that surrounds a reactor primary system and which may assume many forms. The forms predominate in the U.S. power reactor field are steel pressure vessels and various types of concrete structures with steel liners. These structures are provided with various penetrations, including equipment and personnel air locks, electrical and instrument penetrations, and piping penetrations, together with their associated isolation valves, all of which are designed to maintain the integrity of the system.

Other engineered safety features considered to be part of the containment system include containment spray systems, containment air-recirculation and -cooling systems, and other heat-removal systems. The basic purpose of each subsystem is to reduce the postaccident containment atmosphere pressure and temperature as quickly as possible and thereby minimize the release of any fission products to the environment. Other systems or structures, such as in-core cooling, missile shields, and special earthquake-resistant structures and systems can also be considered as "engineered safety features." However, they are the subjects of other reports of this series, and therefore are not discussed in this report.

Two basic containment design concepts have been used predominantly with water-cooled power reactors in the United States. These are pressure containment and pressure-suppression containment. Multiple-barrier containment (a form of pressure containment) and augmented pressure-suppression containment are also discussed briefly. Each of these is illustrated in Fig. 1.1 (Refs. 2 and 3).

1.2.1 Pressure Containment

Pressure containment consists of a single-barrier pressure envelope to enclose the primary reactor system and, frequently, many of the auxiliary systems. Steel shells have been used for most nuclear power plants

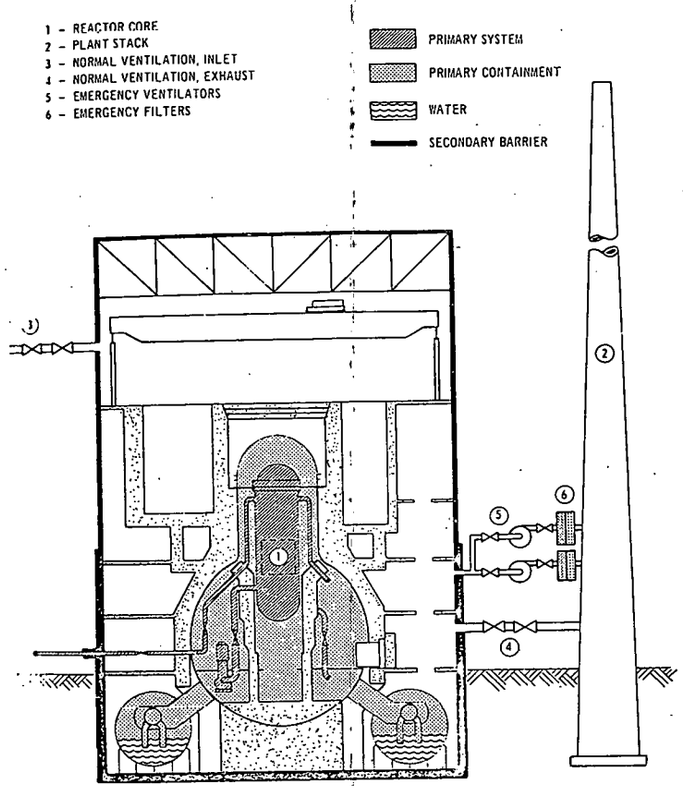

PRESSURE SUPPRESSION

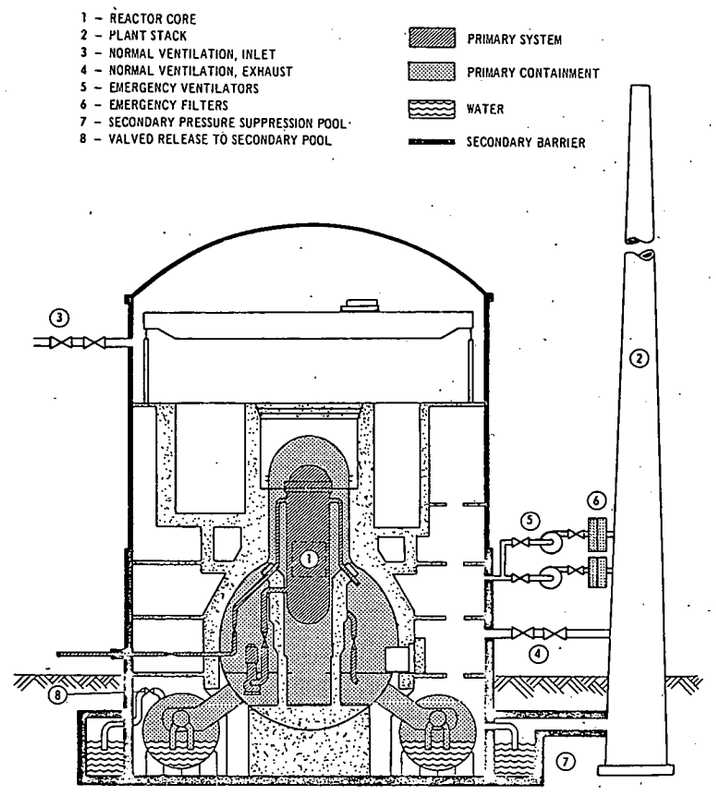

AUGMENTED PRESSURE SUPPRESSION

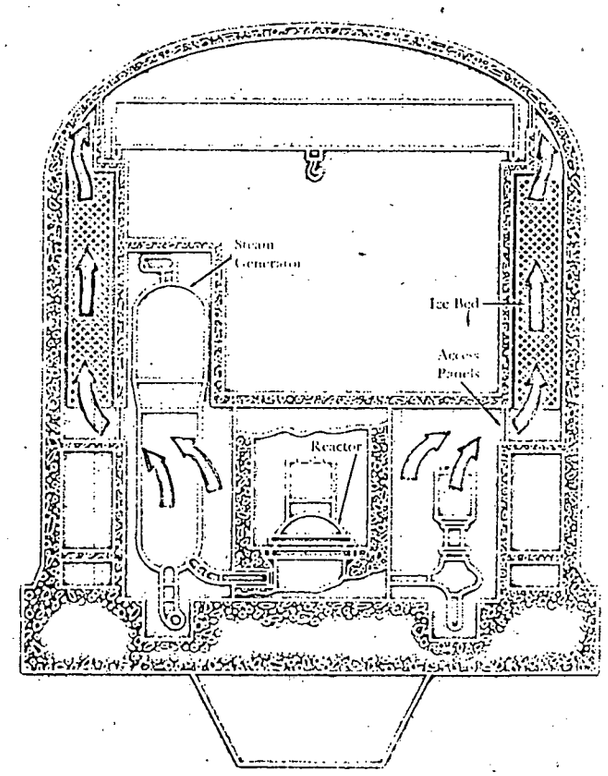

ICE CONDENSER

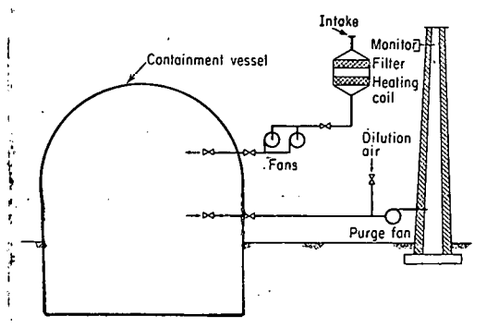

PRESSURE

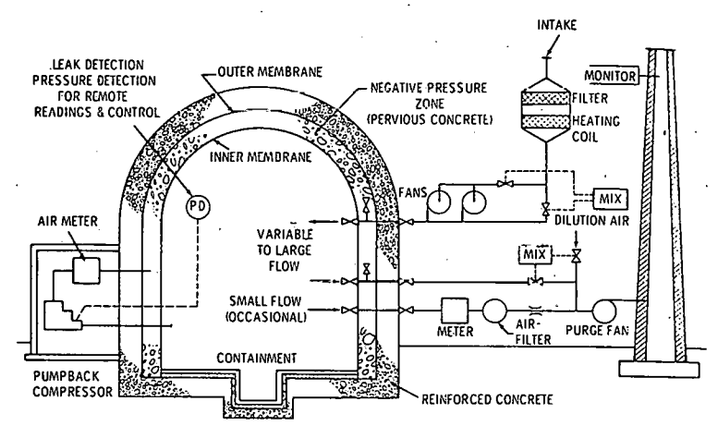

MULTIPLE BARRIER OR DOUBLE

Fig. 1.1. General Types of Reactor Containment Systems. (Refs. 2 and 3)

built to date, but as reactor sizes, power densities, and shielding requirements have increased, interest has increased in concrete structures with steel liners for pressure containment. Both reinforced-concrete and prestressed reinforced-concrete designs are being used.

Multiple containment barriers have been proposed for power reactors to be located in urban areas. In the multiple-barrier concepts, leakage past the first containment barrier is collected within a reduced-pressure zone between the first and a second barrier and is either exhausted through a filter system and stack or pumped back inside the containment space. These concepts offer greater control of leakage than the single-shell containment vessel; further, they may have an advantage in improved accuracy of leakage-rate testing and ease in performing continuous monitoring of the leakage rate.

1.2.2 Pressure-Suppression Containment

The pressure-suppression type of containment is based on ducting the reactor coolant discharge from a hypothetical loss-of-coolant accident into a heat sink (usually a pool of water) and thus reducing the pressure and temperature inside the containment space by condensing the steam-water mixture. Some of the fission products entrained in the coolant would also be removed in the pool water. New, large BWR plants have a steel drywell in the shape of an inverted light bulb surrounded by a toroidal steel pressure-suppression chamber. Both the drywell and the suppression chamber are enclosed in a relatively low-leakage building held at slightly negative pressure (~1/4 in. H_2O) by fans that exhaust through filters to a stack. This arrangement provides a form of multiple-barrier containment.

In this concept, leakage control can be further increased by augmenting the secondary containment building enclosing the suppression chamber and drywell with a low-leakage pressure-containing structure provided with a second pressure-suppression system in order to condense steam from possible process-line ruptures in the building area. This system has been referred to as "augmented pressure suppression" and has not been proposed for any commercial reactor plants thus far.

For the latest BWR plants the drywell and pressure suppression chambers are designed for the same pressure, and therefore it is possible to test the strength and leakage rate of both vessels simultaneously. Humidity measurements are more critical in a pressure-suppression containment leakage-rate test than in other types of containment because of the large exposed surface of water.

A recent development in pressure-suppression containment concepts is the Westinghouse ice condenser reactor containment system, which provides ice to condense any steam accidentally released within the containment structure. The ice is housed in a cold-storage compartment surrounding the nuclear steam supply system and is kept frozen by conventional refrigeration equipment. An increase in pressure in the nuclear compartment would activate the access panels located at the bottom of the ice storage compartment and permit steam and/or hot air to flow through the ice condenser bed and pass into the top discharge compartment via top access panels. This system reduces the size of PWR containment structures based on a lower design pressure and would eliminate a prolonged rise in containment pressure. The claim is made that reliability is increased, since no rotating equipment is required to activate the system.

If the AEC allows the reduction of containment design pressures from approximately 47 psia to about 10 to 15 psig this will imply a reduced design-basis-accident pressure (and associated temperature) and will influence leakage-rate testing procedures. Westinghouse is proposing the Absolute Method for leakage-rate testing the three containment compartments (pressure shell, ice storage, and discharge) shown in Fig. 1.1.

A reduced test pressure requirement would help to reduce the hazards involved in testing and make it possible to conduct periodic leakage-rate tests at full design-basis-accident pressure. Data obtained with a continuous low-pressure leakage and leakage-rate monitoring system would not require too great an extrapolation to the design-basis-accident pressure conditions. The ice-condenser concept might reduce the requirements of the containment air cooling system and could influence containment spray philosophy.

Another concept that is similar to pressure containment is subatmospheric containment, in which steam-ejector and vacuum-pump systems are utilized to maintain a relatively large negative containment pressure (~10 psia) during reactor operation. The claim is made that following a loss-of-coolant accident the containment pressure would be quickly (25 to 60 min) reduced by a recirculation spray system to subatmospheric pressure, and thereby all subsequent leakage would be eliminated. Excessive inleakage following the initial pressure excursion would require the continuous operation of a vacuum pump to maintain a slight negative pressure. The pumping system would discharge activity to the atmosphere through a stack.

1.2.3 Conventional Buildings as Containment Structures

Structures similar to conventional buildings are often used to house the reactor refueling equipment and act as secondary low-pressure containment structures. Containment structures of this type are often operated at reduced pressure; that is, leakage from the building is prevented by maintaining a ventilation system flow rate sufficient to produce a slightly negative pressure within the buildings so that all leakage is inward. The ventilation exhaust is usually directed up a stack; provisions for filtering are available in the event filtering is required. Leakage-rate testing of this type of structure is discussed in Chapter 3 of this report.

1.3 Leakage Rates

Containment leakage rate is one of the factors that enters into the determination of off-site radiation doses due to design-basis accidents. Generally, in large nuclear power plants, the lowest leakage rate verifiable by test is not adequate, without the action of other engineered safety features, to meet the AEC's siting guides of 10 CFR 100 (Ref. 4). Leakage rates of 0.1 to 0.5% per day are usually specified as the maximum-allowable design-basis-accident leakage rates. (The design-basis-accident leakage rate is the leakage rate at the maximum containment operating pressure (calculated peak pressure) that is applied in the safety

analysis to evaluate the consequences of containment leakage under the calculated design-basis-accident conditions, in accordance with the site-exposure guidelines set forth in 10 CFR 100.) The leakage rate, together with the action of engineered safety features, must be consistent with the AEC siting requirements.

When new engineered safety features have been developed, including new pressure-suppression concepts and improved fission-product-collection devices, and their performance and reliability have been successfully demonstrated, perhaps the present maximum design-basis-accident leakage rates can be appreciably increased. Such an increase would simplify the process of leakage-rate testing and improve reliability. On the other hand, multiple-barrier containment designs may be required if hazards considerations dictate lower maximum-allowable leakage rates or more positive control of leakage than can be achieved by single-shell containment vessels. If the secondary containment space did not contain a cleanup system, or if the cleanup system became inoperative, containment effectiveness would still be considerably improved because of the additional holdup time and opportunity for deposition and plate out of fission products the secondary space would provide. Because some leak paths are more important than others and gross leakage measurements may give an overly pessimistic picture of the accident situation, sophisticated accident analyses give consideration to the holdup time provided by conventional structures surrounding the primary containment system.

Robertson[5] has pointed out that if a containment volume of 2,000,000 ft^3, a leakage rate of 0.1% in 24 hr, containment conditions of 55 psia and 150°F, and the properties of steam are assumed, the leakage can be represented by that from a hole with a diameter of about 0.06 in. Considering the size and complexity of reactor containment systems, limiting leakage to that from a 1/16-in.-diam hole is quite a formidable requirement.

Most of the containment systems for large pressurized-water reactors, including plants now being designed, have a maximum-acceptable design-basis-accident leakage rate of approximately 0.1% in 24 hr. Since the major portion of the plant is usually enclosed within the containment

vessel, the free volume is large and one-thousandth of this volume represents a quantity that is just compatible with the measuring methods which have been used.

Although leakage rates as low as 0.1% per day have been apparently achieved, leakage rates much less than this (say 0.01% per day or less) may be very difficult to demonstrate for single-barrier containment systems because of the limited sensitivity of available leakage-rate testing methods, even though it might be possible to actually achieve such a low leakage rate by careful design and construction.

All boiling-water reactors have some type of pressure-suppression system (which can also entrain fission products) and have a smaller containment volume than is used for pressurized-water reactors of similar power; consequently, the BWR containment systems would be at a high pressure for a shorter time in the event of an accident. In addition, BWR plants are also enclosed in a secondary building that has a filtering system and stack that would retard the spread of any fission products released from the primary containment system.

After a containment structure has been completed and prior to licensing and initial operation (usually prior to installation of reactor pressure vessel and core), preoperational leakage-rate tests are usually performed at the maximum accident pressure and at a lower pressure that is to be used for subsequent retesting purposes. The lower testing pressure and its associated allowable test leakage rate (at ambient temperature and air atmosphere) is determined by the reactor operator organization and his consultants based on negotiations with the AEC Division of Reactor Licensing and is stated in the technical specifications that become part of the operating license. The higher accident test pressure and its allowable test leakage rate (at ambient temperature and atmosphere) does not appear in the technical specifications.

The results of the preoperational tests, the maximum design-basis-accident pressure and temperature, and the associated allowable leakage rate at accident conditions are usually presented in the final safety analysis report. The allowable leakage rate at the maximum accident pressure based on accident fluid composition and state is the basic

parameter used to establish all other test and operational allowable leakage rates. The calculations that establish the allowable test leakage rates do not normally appear in any formal document.

1.4 Containment Accident Conditions

The design-basis-accident leakage rate is directly related to the transient conditions within the containment structure following a major accident. Pressure, temperature, steam-air composition of the containment atmosphere, and fission-product release and transport are all parameters that must be considered in arriving at a reasonable allowable leakage rate. Typical BWR and PWR postaccident containment pressure response curves are shown in Figs. 1.2 and 1.3 (Refs. 6 and 7).

The BWR curve shows that in approximately 30 to 80 sec after an accident the pressures in the dry well and suppression chamber (wet well) would equalize to approximately 21 to 25 psig. After this time the pressure response would depend on the successful operation of various engineered safety features. If no safety features were activated, the

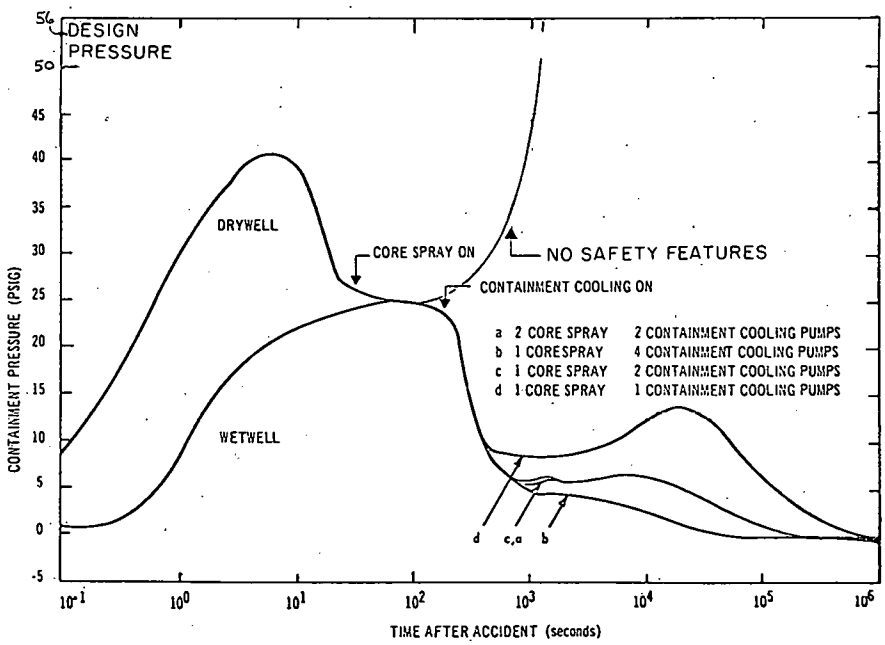

Fig. 1.2. Typical BWR Containment-Pressure Response Following a Major Accident. (From Ref. 6)

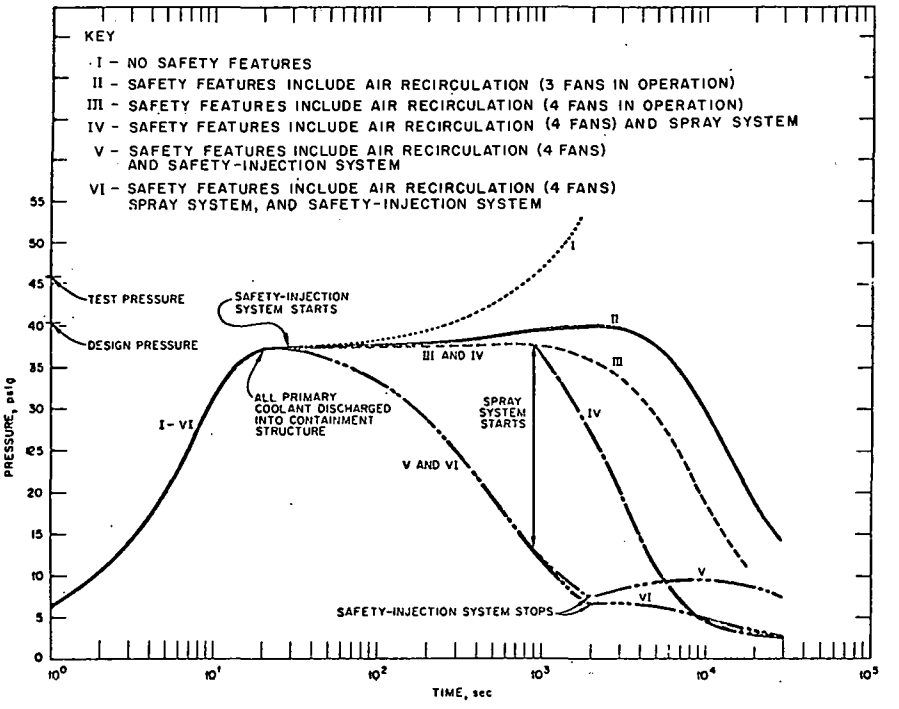

Fig. 1.3. Typical PWR Containment-Pressure Response Following a Major Accident. (From Ref. 7)

pressure would continue to rise and eventually would exceed the containment design pressure. As can be seen from Fig. 1.2 the pressure response is related to the number of core spray and containment air-cooling or spray systems that are successfully operated following the accident.

The typical PWR pressure response (Fig. 1.3) indicates a steep rise to approximately 38 to 48 psig within 8 to 20 sec, followed by a reduction in pressure, and then a second rise to a maximum pressure just below design pressure after 4 to 20 min. This response is typically based on partial safety feature operation. Again, if no safety features were activated, the pressure would continue to rise and would exceed the containment system design pressure. Following the original pressure increase the pressure transient would be related to the number and type of engineered safety features operational following the accident.

A theoretical fission-product release curve is shown in Fig. 1.4. The curve only indicates a probable time and magnitude relationship relative to the pressure transient following an accident in either a BWR or

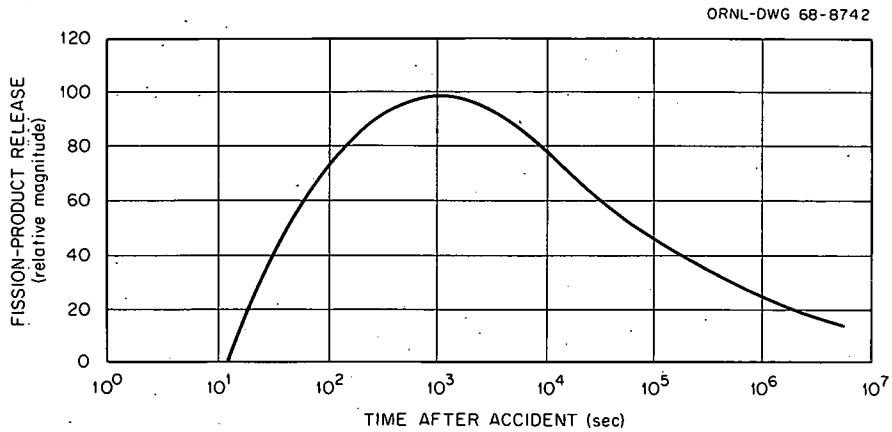

Fig. 1.4. Typical Fission-Product Release Following a Major Accident.

PWR reactor. This curve is based on the theory that a few fuel element failures would occur after about 20 to 30 sec following the initial accident and that the mechanism for displacing the fission products is the new steam formed from the injected core spray coolant. The maximum release would coincide with the related decrease in pressure due to the spray addition, and the release rate would subside rapidly after the peak was reached.[8]

The USAEC document[9] on "Calculations of Distance Factors for Power and Test Reactor Sites" provides an analytical method for calculating siting distances and gives reference information and guidance on procedures and basic assumptions for reactor siting. As stated in this document:

> "It is assumed that the reactor is a pressurized water type for which the maximum credible accident will release into the reactor building 100 percent of the noble gases, 50 percent of the halogens and 1 percent of the solids in the fission product inventory. Such a release represents approximately 15 percent of the gross fission product activity.
>
> "The release of available (airborne) radioactivity from the reactor building to the environment is assumed to occur at a constant leakage rate of 0.1 percent per day. The leakage and pressure conditions are assumed to persist throughout the effective course of the accident, which for practical purposes, would be until the iodine activity becomes insignificant. The maximum pressure within the reactor building and the leakage rate would actually decrease with time as the steam condenses from contact with cooling surfaces. By assuming no change in leak rate as

a function of pressure drop, it is estimated that the final off-site doses calculated may be too high by factors of 5-10.

"The exact release can vary so much with the reactor system and with the detailed nature of an accident that the degree of conservatism in the assumptions made in any given case, is not known. Further, there is a multiplicity of possible combinations of the physical and chemical form of the radioactive materials released into the containment vessel and of the ways that atmospheric conditions might cause these radioactive materials to be transported to regions beyond the site boundary."

These quotations are indicative of the AEC philosophy used in establishing leakage rates. There are many factors that contribute to the difficulty of determining the exact radioactive fission-product content of the containment atmosphere and the actual transient pressure condition that provides the driving force required to produce containment leakage. (Additional information on fission-product release and dispersion can be found in Chapters 4 and 7 of Ref. 1.)

Estimates of radiological releases due to design-basis accidents are made by license applicants and by the AEC Staff. The applicant's preliminary safety analysis report (PSAR) usually presents optimistic assumptions and calculations that result in very low estimated dose rates. Credit is always taken for some containment safety features, such as containment spray or air cooling, and in most cases in-core cooling. The calculated dose rates are shown to be very low, and indeed statements to the effect that the rates are far below the guideline radiation doses given in 10 CFR 100 are presented to indicate ample margin to absorb much larger fission-product releases than those postulated and still adequately protect the public.

In reviewing the PSAR, the AEC staff uses procedures similar to those described in Ref. 9, which postulates an initial release to the containment system of approximately 15% of the gross fission-product activity, whereas the applicants use approximately 1% or less. Discrepancies in exposure dose rates calculated by the AEC staff and by applicants can range from factors of 100 to 500,000.[10,11] These differences are accounted for by differences in the detailed chain of phenomena involved in the release and transport of activity. The 15% release is representative of a total core meltdown accident. It should be pointed out that the meltdown

accident is only a model used for calculating the dose to the public and not the sole factor in evaluating containment integrity. Table 1.1 shows the estimated degrees of conservatism in exposure calculations based on Ref. 9, which indicates that there are potential, conceivable conditions that could result in fission-product releases larger than those assumed and that the consequences could be much more hazardous. A core meltdown accident presents no radiological danger to the public so long as the containment system functions properly and other containment safety features, such as air cooling, spray, and filtering systems, are successfully operated.

However, the basic assumption of a complete core meltdown is incompatible with containment integrity unless some device or system is provided to confine the molten heat source (~30 to 40 Mw for a large reactor) within the containment envelope.

Table 1.1. Estimated Degrees of Conservatism in Exposure Calculations[a]

Calculation or Assumption	Degree of Conservatism
Removal of iodine from containment vessel atmosphere by various physical phenomena, such as adsorption, adherence, and settling	3–10
Removal of iodine by protective safety features, such as cooling spray and filtration of internal-air-recirculating systems	10–1000
Vessel leakage rate calculated at constant peak pressure	5–10
Wind direction shift during extended period of time	2–50
Wind meandering from center-line direction	~3
Atmospheric dispersion under other than inversion conditions	5–1000
Particulate fallout from radioactive cloud	2–5
Direct gamma dose, with shielding from structures and topography neglected	2–1000

[a]From Ref. 1.

Criterion 49 of the AEC General Design Criteria for Nuclear Power Plants[12] requires the design of a containment structure or system to accommodate an accident in which the emergency core-cooling system fails to function, therefore (without regard for the Chinese Syndrome dilemma[13]) the engineered safety features of containment systems must be designed, built, installed, tested, maintained, and operated in the most reliable manner possible. Some form of containment cooling is essential to prevent destruction of the containment vessel due to overpressure. Further, there can be no compromise in the manufacturing and inspection procedures used for individual system components, and many off-the-shelf items will not be adequate. Recent trends in electrical equipment failure appear to bear out the need for tightening quality-control specifications.[14]

1.5 Purpose of Containment System Testing

The purpose of containment systems testing is to provide assurance that the containment structure and associated engineered safety features will function as designed in the event of an accident. The methods of conducting these tests, as well as the considerations that go into determining the frequency of periodic tests, are discussed further in other sections of this report.

The basic objective is to design and build an integrated containment system that will prevent or minimize radioactive releases to the atmosphere in case of a serious accident to the primary system. Reliability and testing requirements must be considered in the initial design stages. The major difficulty in evaluating containment system tests (especially leakage-rate tests) is the relationship between accident and testing conditions. Correlations between the two conditions must be developed before ambient-temperature air-leakage rate data can be quantitatively applied to accident analysis. This type of information can then provide a basis for establishing meaningful ambient-temperature leakage-rate criteria.

A typical listing of accident and testing conditions, given in Table 1.2, indicates that leakage-rate testing conditions only simulate one parameter versus four or more parameters that represent the accident

Table 1.2. Comparison of Accident and Containment Systems Testing Conditions

Parameters	Conditions	
	During Accident	During Testing
Atmosphere	Steam plus air plus radioactive particles and gases	Dry air
Temperature	Increasing	Ambient
Pressure	Increasing	Maximum for design-basis accident
Induced stresses	Transient thermal and pressure	Pressure[a]

[a]Measured with strain gages.

conditions, and this is only during the preoperational leakage-rate test at design-accident pressure conditions. Subsequent surveillance testing is with air at some lower test pressure.

An outline of the general types of containment system testing is given below:

Vessels and Penetrations

1. Strength
2. Periodic local
   a. Leak
   b. Leakage rate
3. Periodic integrated leakage rate
   a. Maximum accident pressure
   b. Intermediate pressure
   c. Low pressure
4. Continuous
   a. High-pressure local leakage rate
   b. Low-pressure integrated leakage rate

Spray, Air-Cooling, and Heat-Removal Systems and Valves

1. Strength
2. Leak
3. Leakage rate
4. Performance

The usual testing sequence is the following:

Bare-Vessel Tests

1. Strength
2. Leak
3. Leakage rate

Preoperational Tests

1. Strength
2. Leak
3. Leakage rate
4. Performance

Periodic Surveillance

Continuous Surveillance

Strength testing is repeated under preoperational tests because this test will probably be performed just prior to the required preoperational integrated leakage-rate tests associated with metal-lined concrete containment vessels. This procedure results in a minimum containment vessel pressure-time exposure consistent with present AEC testing requirements.

The following general types of tests are performed to provide increased assurance that in the event of a serious accident, the containment structure leakage rate will be within allowable limits.

1.5.1 Strength Testing

The purpose of strength testing is to demonstrate that the containment structure has been designed and constructed so that it will subsequently be able to contain the design pressure without failure. These tests are conducted in accordance with the procedures presented in Sections III and VIII of the ASME Boiler and Pressure Vessel Code.

1.5.2 Integrated Leakage-Rate Testing

Integrated leakage-rate testing at relatively high pressure is performed initially and at intervals during the life of a reactor plant to confirm the leaktightness of the containment structure. Although integrated leakage-rate testing has often been performed immediately after completion of the vessel and prior to installation of penetrations and isolation valves, tests performed at this time are not very meaningful and will probably be performed less in the future. This prepenetration test is not required by the AEC but is a contractual requirement to insure the purchaser that the vessel supplier has built a vessel that is sufficiently airtight prior to the installation of penetrations and isolation valves. A development that is receiving more attention is continuous low-pressure integrated leakage-rate testing performed while the plant is operating at power. This testing has the primary purpose of insuring that during operation no appreciable changes occur in the integrated containment leakage rate as a result of such incidents as leaving an air lock open, failing to close a purge line, failure of valve packing, etc. Experience to date indicates, however, that this technique will also detect small changes in leakage rate (comparable to the allowable rate) within 30 to 60 days.

1.5.3 Leakage Surveillance Testing

Leakage surveillance testing is the testing performed on those components most likely to leak, such as penetrations, isolation valves, air locks, etc. These tests are normally performed more frequently than integrated leakage-rate tests, since successful performance in these tests permits inference of a high probability that leakage measured in an integrated leakage-rate test of the complete containment system will not be excessive. These tests are usually performed by pressurizing the component in question and then monitoring leakage by measuring pressure decay or by other means. In some cases, surveillance testing is conducted continuously by maintaining an internal pressure on the penetration and monitoring the pressure decay when the plant is operating. It has been argued that continuously pressurizing penetrations to full accident

pressure will decrease the probability of leakage through these penetrations should an accident occur. This is due to the zero or negative pressure gradient, which in turn prevents outleakage of the containment atmosphere. It is not clear that this degree of conservatism is warranted, particularly if constant penetration pressurization were made a requirement for power operation, and failure of the pressurization system could necessitate shutdown of the reactor plant. From the standpoint of direction of leakage under accident conditions, a negative pressure or vacuum test would be preferable.

1.5.4 Engineered Safety Feature Testing

The purpose of testing engineered safety features is fairly obvious — to provide the reactor operator with assurance that these vital systems will operate properly in the event of an accident that requires their use. Achievement of this purpose is complicated by the fact that it is usually impossible to test the engineered safety features under actual accident conditions (with the containment system pressurized with steam). In some cases, use of operating equipment that is normally operating (containment air coolers, for example) to provide containment cooling in the event of an accident provides a high degree of assurance that the equipment will be operating at the time when an accident occurs. This is another form of continuous testing that is similar to the continuous low-pressure integrated leakage-rate test.

2. APPLICABLE CODES, STANDARDS, AND REGULATORY REQUIREMENTS

Design codes usually refer to nationally recognized standards and represent only minimum requirements. Each containment system is reviewed for conformance to governing legal criteria and for adequacy of provisions for public safety. The majority of codes do not have legal status; however, many cities and states have adopted sections of codes and, as such, those sections attain legal status. The standards, codes, and guides associated with containment system testing are primarily used as guides by plant designers and operators.

The AEC regulatory staff can request that various codes, guides, and standards be referenced in construction and operating license documents and, because of this, the referenced documents acquire legal status. The AEC Division of Reactor Standards has also developed its own series of documents to establish minimum standards from AEC's viewpoint of responsibility for safety — "Safety Standards, Criteria, and Guides for the Design, Location, Construction, and Operation of Reactors." Included in this series is Part III. Technical Safety Guide — Reactor Containment Leakage Testing and Surveillance Requirements, which is now being used by the Division of Reactor Licensing as a guide in establishing leakage-rate testing requirements. Because of its importance, this guide is discussed separately in Section 2.2 below and is included in this report as Appendix B.

Other codes, standards, and guides representing those that are now being applied or are being referenced in documents related to containment testing are discussed in Section 2.1. Table 2.1 lists all existing and/or planned documents that pertain to or are indirectly associated with containment system testing.

2.1 Codes, Standards, and Guides

Water-cooled and -moderated power reactors are entering a design and construction phase in which many design features are being standardized. A number of "standards" have been written to cover various phases of design, fabrication, and testing of reactor plant containment systems, and these

Table 2.1. Containment System Testing — Related Codes, Standards, and Guides

Sponsoring Organization[a]	Standards Committee	Chairman, Address	Codes and Standards Activities	Standard Number	Status	Date of Standard or Latest Draft	Remarks
ACI	Committee 349	Raymond C. Reece, Raymond C. Reece Associates, P. O. Box 556, Toledo, Ohio	Criteria for concrete containment structures for nuclear reactors		Active		Task group preparing criteria to include reinforced and prestressed designs; cooperating with ASME group
ACI	Committee 318	Raymond C. Reece, Raymond C. Reece Associates, P. O. Box 556, Toledo, Ohio	Building code requirements for reinforced concrete	318	Approved	1963	Periodically reissued
ANS	ANS-7	S. S. Bacharach, Aerojet-General Corp., Sacramento, Calif.	Leakage rate testing of containment structures for nuclear reactors	ANS-7.60	Active	June 1967	Approved by ANS June 14, 1967
API	Division of Refining	Division of Refining, American Petroleum Inst., 1271 Avenue of the Americas, New York, New York	Recommended rules for design and construction of large, welded, low-pressure storage tanks	API-620	Approved	Nov. 1966	Third edition
ASCE	Task Committee on Nuclear Materials	S. H. Fistedis, Argonne National Laboratory, Argonne, Illinois	Testing of containment capabilities of reinforced-concrete enclosures	ANL-6664	Approved	March 1963	Issued as an informal document
ASME	ASME Boiler and Pressure Vessel Code Committee	American Society of Mechanical Engineers, United Engineering Center, 345 E. 47th St., New York, New York	Rules for construction of unfired pressure vessels	Sect. VIII	Approved	1965	Addenda issued twice a year
ASME	ASME Boiler and Pressure Vessel Code Committee	B. F. Langer, Westinghouse Electric Corp., Bettis Plant, Pittsburg, Pennsylvania	Boiler and Pressure Vessel Code, Sect. III, Nuclear Vessels	Sect. III	Approved	1965	Addenda issued twice a year; often refers to Sections II and IX of the Boiler and Pressure Vessel Code
ASME	ASME Boiler and Pressure Vessel Code Committee	C. Rogers McCullough, Southern Nuclear Engineering Co., Dunedin, Florida	Criteria for concrete reactor vessels for nuclear plants		Active		Task group preparing criteria to include reinforced and prestressed designs
ASME		W. R. Smith, General Electric Co., 175 Curtner Ave., San Jose, Calif.	ASME code for pumps and valves for nuclear service		Active	Nov. 1966	Tentative draft issued for comments
IEEE	WG-1, Electrical Penetration Assemblies	H. W. Meswarp, Gibbs & Hill, Inc., 393 Seventh Ave., New York, New York	Guide for electrical penetration assemblies in containment structures for stationary nuclear power plants		Active	Sept. 1966	Proposed seventh revision issued for comments
USASI	N6.2	R. N. Bergstrom, Sargent & Lundy Engineers, 140 S. Dearborn St., Chicago, Illinois	Safety standard for design, fabrication, and maintenance of steel containment structures for stationary nuclear power reactors	N6.2-1965	Approved	April 1965	
USASI	B 31	E. C. Pandorf, Cincinnati Gas & Electric Co., P. O. Box 960, Cincinnati, Ohio 45201	American standard code for pressure piping	B31.1	Approved	1955	Addenda issued; sponsored by ASME
USASI	B 31	W. R. Gall, Oak Ridge National Laboratory, P. O. Box X, Oak Ridge, Tenn. 37830	American standard code for nuclear power piping	B31.7	Active	Feb. 1968	Tentative draft issued for comments; sponsored by ASME
USASI	N6.9	W. B. Cottrell, Oak Ridge National Laboratory, P. O. Box Y, Oak Ridge, Tenn. 37830	Compilation of U.S. nuclear standards		Approved	1966	Reissued annually

[a]Code to sponsoring organizations:

ACI — American Concrete Institute
ANS — American Nuclear Society
API — American Petroleum Institute
ASCE — American Society of Civil Engineers
ASME — American Society of Mechanical Engineers
IEEE — Institute of Electrical & Electronics Engineers
USASI — United States of America Standards Institute

are very helpful. However, their use to design specific equipment items, such as penetrations, valves, etc., should be avoided, since this would tend to fix designs at a minimum level and could result in the subjugation of design initiative and progress in the development of safer and more reliable reactor plants. Such further development is particularly desirable because of the strong incentive to locate reactors in urban areas. Use of standards primarily as guides, as well as use of codes similar to the ASME Power Test Codes or the Instrument Society of America's Tentative Recommended Practices, is appropriate at this phase of the industry's development.

The Atomic Energy Acts of 1946 and 1954 placed many areas of the nuclear industry under the regulatory control of the government. However, the development of nuclear standards in the United States is, at present, primarily the responsibility of the various technical societies, scientific organizations, trade associations, manufacturers, and other groups directly affected by these standards. To be useful, a standard must be approved by all affected organizations.

The United States of America Standards Institute (USASI) was created in 1966 as the successor to the American Standards Association in order to expand the program and to accelerate the output of voluntary national standards serving the entire economy. Standards approved by the new Institute are designated USA Standards. This designation also applies to all previously approved American Standards. Broader participation by all interested groups, including departments and agencies of the Federal Government, increased representation and leadership in the international standards programs, and emphasis on consumer interests are major objectives of the Institute.

Three councils make up the operating arms of the Institute. These are (1) the Member Body Council, which is responsible for standards activities, (2) the Consumer Council, and (3) the Company Member Council. Consumer representatives and company representatives can recommend areas for the development of appropriate standards. They can request the opportunity to review and approve or disapprove any standard. The new Consumer Council has representation from the Member Body and Company Member Councils and five members who need not be representatives of Institute members and

who are appointed by the Executive Branch of the Federal Government. The Consumer Council is concerned primarily with the application of the Institute's procedures for certification and labeling of consumer goods.

Approval of USA Standards is based on consensus of all parties concerned. The hundreds of national trade associations and technical, professional, and scientific societies that develop standards and work with the Institute are encouraged to extend this consensus principle to their own operations. The Institute, under the terms of its constitution, is not permitted to develop standards on its own. It does, however, promote and accent the development of needed standards by appropriate, competent, and accepted organizations and provide the mechanism for approval and dissemination of standards.

There are many company standards and technical society standards that have never been submitted to USASI for approval. Such standards are nonetheless valid when accepted by those concerned, and some are nationally recognized. An informal cooperative relation is maintained between USASI and the AEC, since industry standards and government regulations should be compatible. Although many groups are involved in the production of standards through USASI, technical and professional societies with nuclear interest also prepare and publish documents that are regarded as standards as far as the particular society is concerned.

A comprehensive review of nuclear containment system codes and standards is included in Section 2 of "U. S. Reactor Containment Technology,"[1] and compilations of all U.S., foreign, and international nuclear standards are issued yearly by the Nuclear Safety Information Center located at Oak Ridge National Laboratory. The major codes, standards, and guides that affect reactor containment systems testing are described briefly below:

1. <u>USA Standard N6.2-1965, Safety Standard for Design, Fabrication and Maintenance of Steel Containment Structures for Stationary Nuclear Power Reactors</u>. This standard outlines suggested practice for the design and construction of welded steel-shell containment vessels. Its purpose is to assure, through the proper design, fabrication, and maintenance of containment structures, that radioactive material cannot be dispersed from nuclear power reactors in a manner that would be harmful to personnel or the public. The Standard is limited to welded steel shells, and it includes

specifications on materials, allowable stress values, shell and head design, design of openings and penetrations, spacing of openings, welding, containment insulation, and foundation and support requirements. Data are also provided on pressure testing for strength, leakage testing, periodic inspection and testing, etc.

The leakage-rate testing provisions of the Standard, although in less detail and somewhat more limited in application, are generally consistent with the provisions of the ANS Standard described below.

2. ANS Standard 7.60, Proposed Standard for Leakage-Rate Testing of Containment Structures for Nuclear Reactors (Latest draft dated June 1967). This proposed standard suggests techniques for local leak detection and for both reference and absolute methods of integrated leakage-rate testing of containment vessels. It reflects the practice that has generally been used in the past and which might be expected to be followed in the future. The provisions of the proposed standard apply "to containment structures for nuclear power, test, research, and training reactors, wherever a gastight containment structure is specified as a condition for operation." (See Appendix C.)

3. Proposed Criteria for Concrete Containment Structures for Nuclear Reactors. This proposal is being prepared by ACI Committee 349, which was recently organized by the American Concrete Institute to develop criteria and design codes for concrete containment vessels. Several meetings have been held and there are hopes that criteria may be available soon.

4. ACI Code 318, Building Code Requirements for Reinforced Concrete. This is the standard of the American Concrete Institute for the design of reinforced-concrete structures. Although it does not strictly apply to concrete pressure vessels, its provisions may be applied to any reinforced-concrete structure, and it is used to the extent it applies for concrete containment vessels.

5. ASME Boiler and Pressure Vessel Code, Section VIII, Unfired Pressure Vessels (Latest edition, 1965; applied when referenced in Section III of the Code). This well-known code and several code interpretations relating it specifically to containment vessels have been used in the design of most existing containment structures. It defines structural design and

testing requirements for welded steel-shell pressure containment vessels. Addenda are issued twice a year (summer and winter) to keep the code up to date.

6. ASME Boiler and Pressure Vessel Code, Section III, Nuclear Vessels (Latest edition, 1965). This portion of the ASME code was first issued in 1963 to define the special requirements for all nuclear vessels. Subsection A applies to reactor primary pressure vessels and is the largest section of the code. Subsection B applies to containment vessels. This code covers the minimum construction requirements for the design, materials, fabrication, testing, and certification of vessels for use in nuclear power plants. Separate addenda are also issued twice a year (summer and winter) for nuclear vessels.

7. API Standard 620, Recommended Rules for Design and Construction of Large, Welded, Low-Pressure Storage Tanks. This standard of the American Petroleum Institute applies specifically to large liquid and gas storage tanks used in the petroleum industry. It has been referred to in a few cases for low-pressure containment vessels designed for pressures below those for which the ASME codes are applicable.

8. B31.7, Nuclear Piping (Latest draft, January 1968). This tentative code is a section of the USA Standard Code for Pressure Piping sponsored by the ASME and as such is part of USA Standard B31. This code prescribes minimum requirements for the design, materials, fabrication, erection, testing, examination, and inspection of piping in nuclear power plants. Its rules provide minimum safety requirements of both steady and fluctuating loads, including thermal stresses that may be expected in the intended service.

9. ASME Code for Pumps and Valves for Nuclear Service (Latest draft, November 1966). This code covers requirements for the design, materials, manufacture, examination, inspection, static testing, and certification of pumps and valves for use in the nuclear energy system of any water-cooled nuclear power plant. Pumps and valves for which rules are specified by this code are those designed to provide a pressure-retaining barrier in a nuclear energy system or for the overall containment of the system. These rules provide requirements for new construction. They cover mechanical

and thermal stresses due to cyclic operation but do not yet cover deterioration that may occur in service as a result of radiation effects and instability of material.

10. Guide for Electrical Penetration Assemblies in Containment Structures for Stationary Nuclear Power Reactors (Proposed, latest revision, September 1966). This document, which was issued by IEEE, covers mechanical, electrical, and test requirements for design and installation of electrical penetration assemblies in vapor-containment structures for nuclear power reactors. The requirements and specifications for vapor-containment structures are inherent in the nuclear safeguards evaluation for the particular reactor. At the present time it is not feasible to establish standards for electrical penetration assemblies independent of these other considerations. Accordingly, this document is intended as a guide and delineates requirements that must be considered to assure that electrical penetration assemblies are consistent with the overall requirements for containment.

2.2 AEC Technical Safety Guide

The AEC guide entitled "Reactor Containment Leakage Testing and Surveillance Requirements" (see Appendix B for latest revised draft, Dec. 15, 1966), was prepared by the AEC Division of Safety Standards. It is Part III, Technical Safety Guide, of a draft of a document entitled "Safety Standards, Criteria, and Guides for the Design, Location, Construction, and Operation of Reactors" and was made available to the Division of Reactor Licensing for interim guidance in establishing leakage-rate testing and surveillance requirements for reactor containment vessels.

The guide outlines specific relations for establishing test leakage rates based on the initial limit of leakage rate under design basis accident conditions, and it suggests a containment retesting schedule that many industrial representatives believe does not give enough credit for such systems as continuous penetration monitoring, weld-channel monitoring, and continuous low-pressure integrated containment leakage monitoring. Some credit or advantage is gained by using these systems, since (1) the use of a continuous penetration monitoring system eliminates the need for class B

tests (penetration tests), (2) weld-channel monitoring reduces the risk of leakage development at weld areas which, if undetected, could contribute to excess leakage and result in a penalty of more frequent integrated tests, and (3) continuous low-pressure leakage monitoring surveillance of the conditions of the containment system assures the plant operator that containment integrity is maintained to the degree that no gross leaks have developed (based on limits of accuracy of the continuous monitoring technique employed).

The Division of Reactor Licensing uses the Technical Safety Guide only as a guidance document and does not rigorously apply it. An example of this is the leakage rate specified for the San Onofre Reactor,[15] which has the design-basis-accident leakage rate as the allowable leakage rate under test conditions and thereby neglects the correction factors for temperature and air testing conditions. While this leakage rate does not result in excessive exposures with respect to the guideline set forth in 10 CFR 100, there is still an inconsistency with the Technical Safety Guide in the method of applying the relative leakage-rate factors. Another example is that a summary technical report which includes specific information about the test is suggested in the guide, but it is seldom required that such a report be submitted officially.

A previous issue of the guide (January 15, 1966) indicated that plans were being made to issue the guide for public comment upon completion of a supporting technical information document that would accompany the guide and outline the bases for its requirements; however, the latest revision, dated December 15, 1966, only mentions that the recommended testing and surveillance program has evolved from a survey of containment leakage characteristics and reported testing experiences.

The guide's purpose is stated as follows:

> "These minimum test requirements are intended to verify periodically the leak-tight integrity of the containment system, and to establish the acceptance requirements of each test. The purpose of the tests is to assure that leakage of the containment system is held within allowable test limits and that the periodic surveillance tests assure proper maintenance and repair."

Four types of tests are suggested in the guide. The class A test is an overall integrated leakage-rate measurement of the containment system.

Class B tests are individual local leakage tests, such as at penetrations, etc., and class C tests are for isolation valves. Class D tests cover other engineered safety feature systems that influence containment leakage under postaccident conditions. The guide states that these tests are to be performed under class A test conditions, although this has not been required in any licensing action completed to date. The requirements for testing engineered safety feature systems are currently being reviewed, and the AEC criteria that evolve may influence these requirements.

Either the absolute method or the reference method of leakage-rate testing (as described in Sect. 3.2 of Chap. 3, this report) is acceptable, and the minimum testing time is 24 hr. The initial integrated leakage-rate tests are performed after completion of the containment structure and installation of all penetrations. These tests are conducted at two pressure levels, with the first being at 100% maximum containment system operating pressure. This is the maximum calculated peak pressure for the design-basis accident. This pressure can be equal to or below the design pressure of the containment vessel. The second pressure is established as not less than 50% of the maximum containment system operating pressure. This pressure is used for subsequent class A retesting. The two tests measure the representative leakage characteristics of the containment system. The reduced-test-pressure leakage-rate test is justified by conducting more frequent surveillance tests of various containment components, including valves, at a test pressure equal to the maximum calculated peak accident pressure. In addition to the two class A preoperational leakage-rate tests, a third leakage-rate test may be conducted at a lower pressure corresponding to that maintained during the operation of a continuous leakage monitoring system.

A method of determining retest schedules is included in the guide which recognizes that the containment leakage potential and its consequences depend on the magnitude of the calculated peak accident pressure and activity and its corresponding leakage rate as influenced by siting criteria. More frequent testing is considered necessary where low leakage rates are specified, since test experiences have shown the difficulty of maintaining these low rates. It should be noted that if the engineered safety features operate as intended, the containment system will be at its

peak pressure condition for only a short time, and this could, in turn, represent a sizable safety factor.

A retest schedule provides for a graduated increase in the interval between tests for the first three class A tests. During this period, the adequacy of the test program can be evaluated by the observed leakage behavior of the containment system. The test frequency is then established at a level governed by the leakage measurements of the successive tests. Leakage measurements that yield results in excess of allowable test limits then indicate the existence of deteriorative service conditions or inadequate maintenance programs during the test interval, and therefore reveal the need to decrease the interval between successive tests. On the other hand, leakage measurements within limits attest to the adequacy of the test program and result in increasing or maintaining the time interval before the following test. The test schedule reflects this flexible approach of allowing the observed leakage behavior of the containment system during service to dictate the test frequency.

The allowable test and operational leakage limits (which are specified in the technical specifications) establish the acceptance criteria for class A tests. These limits are determined by adjusting the design-basis-accident leakage rate to reflect the differences between the calculated accident and test conditions. A further adjustment is made to account for testing at pressures other than the calculated peak pressure of the design-basis accident. Following each class A test and before resumption of plant operation, the allowable operational leakage rate may be intentionally decreased to provide a margin for any leakage increase the containment system may experience in future service. The margin is proportionally adjusted as the interval between class A tests is extended by the test frequency schedule.

The guide specifies that all class B tests (individual local leakage tests) are to be performed by local pressurization at the maximum containment operating pressure. Retesting is required when any leakage rate per 24 hr per component exceeds 0.1% of the maximum allowable test leakage rate (L_p). This approach would allow approximately 1000 such leaks to be present. The class B retest schedule requires two tests between class A tests, with one year as a maximum limit. An exception is made for airlocks

that are to be retested every four months. Additional retests are required if there is no provision for testing components.

Class C tests, which cover all valves that could cause breaching of the containment system, include both closure and leakage tests. The piping between isolation valves is to be pressurized at the maximum containment system operating pressure, and each individual valve leakage rate per 24 hr must not exceed 1% of the maximum allowable test leakage rate. This approach would permit operation with each of 100 valves leaking at approximately 1% of the maximum allowable rate. Class C retesting is based on the schedule of class B tests and must be conducted at least once per year.

The guide states that class D tests (tests of other engineered safety systems) are to be conducted initially in conjunction with the preoperational leakage-rate test at maximum design-basis-accident pressure (P_p). Future tests are then conducted at ambient conditions during class A tests and at least once a year.

A continuous leakage monitoring system is acceptable to measure or detect changes in rates provided the system is operated at 10% or more of the containment vessel test pressure. Leakage rates, testing intervals, and acceptance criteria are outlined in the guide for continuous monitoring systems. Class A tests are also applicable to multiple-vessel and multiple-barrier containment systems.

The guide specifies that summary technical reports for all class A, B, C, and D tests are to be submitted. The reports are to include a schematic arrangement of the leakage-measurement system, the instrumentation employed, the test procedure, test results in graphic form, and the analysis and interpretation of leakage-rate results in terms of the allowable leakage rates specified in the license.

Reactor operating and prime contractor firms appear to be in general agreement that the underlying basis of the retest schedule was arbitrarily set by the AEC Division of Reactor Standards, who developed the retest schedule on the basis of existing containment leakage-rate tests but did not publish this information. An objective rationale for the retest schedule cannot be established at this time; however, the AEC feels that a conservative approach is prudent, since the maximum accident pressure and associated temperature probably will increase containment leakage rates.

The containment design pressure is usually based on the expected maximum accident pressure, and it is assumed that the associated leakage hazard is therefore greater for higher design pressures. The schedule, as presented in Fig. 2 of the guide (App. B), classifies reactor containment systems on the basis of the maximum operating pressure and the design-basis-accident leakage rate.

Section 3.2 of the guide indicates that the testing accuracy is to be verified by a supplementary means to demonstrate the validity of measurements. An indirect method that has been successfully employed in containment leakage-rate tests involves the accurate measurement of a leakage rate through a calibrated leak intentionally superimposed on the existing leakage rate during the latter part of a test.

The use of a continuous penetration-monitoring system is discussed in the guide. This system can be pressurized to accident- or full-vessel-design-pressure conditions and continuously monitored to indicate leakage. Individual penetrations can then be isolated and leak tested, if necessary. In some plants, a similar system has been proposed for continuously testing the space enclosed in steel channels welded over all containment vessel welded joints. Since experience has shown that piping, electrical, and instrumentation penetrations are major areas for concern as potentially significant leakage paths, the use of such systems is given consideration in establishing the overall retest schedule. A system for monitoring isolation-valve seals that maintain a leg of water in lines penetrating the containment vessel was proposed and was recently incorporated in the guide.

The provisions included in the guide for reporting test results should be valuable in designing for future tests and as a means of reviewing and checking to insure that the containment system is meeting the license requirements. It should be noted that many such reports have been written and, if not submitted to the AEC officially, have been made available to AEC inspectors for review. It would be desirable to perform tests at enough pressures to establish a curve of leakage rate versus pressure. Subsequent testing pressures could then be chosen based on this curve.

The guide, which essentially has been adopted as a "standard," should be continuously reviewed and revised by the AEC based on experience,

research, and development information, as well as administrative criteria and decisions. The proposed standard for leakage-rate testing (ANS 7.60) has been approved by the American Nuclear Society and issued for USA Standards Institute approval. It is now referenced in the AEC Technical Safety Guide (December 15, 1966, Revision) and is included in this report as Appendix C. However, it will probably be revised before being issued as a USA Standard. Steel containment vessel manufacturers feel that the standard is too restrictive if applied to bare-vessel leakage-rate testing by the reference method.

With the current trend toward building reinforced- and prestressed-concrete reactor containment structures, it is imperative that criteria be developed and, eventually, design codes be written to cover this field, which would also be considered as supplementary to the AEC guide. Along this line, the American Concrete Institute's Committee 349 was organized and is coordinating its activities with those of the ASME Committee organized to develop criteria and design codes for concrete primary reactor vessels for nuclear plants. Also, an ASME Code for pumps and valves for nuclear service is in draft form, but it will probably not be approved for several years. This Code (which is similar in purpose to the proposed USA B31.7, Code for nuclear piping) covers design, materials, manufacture, examination, inspection, static testing, and certification requirements to upgrade equipment utilized in nuclear facilities. While it does not cover in-service testing, the importance of this activity cannot be overemphasized, since the reliability of many complex systems, such as engineered safety features, is directly related to the quality of each component (pipe, valve, etc.) that becomes part of the system.

While the sponsoring societies and members of industry are pursuing these tasks as fast as possible, it is well known that the time required to produce an approved code is measured in years. A good example is the proposed Nuclear Power Piping Code, B31.7, which was started in 1961 and is not yet approved. Since the AEC has a joint responsibility with industry in seeing that the required codes are developed, perhaps progress could be accelerated by having the AEC act as sponsors of the task force meetings and supplementing the industrial force with a small committee of qualified personnel from the national laboratories who would be given

adequate time, resources, and the specific task of speeding up the development of these important documents.

The AEC has recently established the RDT Standards Program, which entails development of standards for engineered safety features and the establishment of guides, codes, and standards for government-owned or -sponsored reactor facilities. Much of the information to be developed in this program will be useful as a foundation for a similar program related to large commercial power-reactor plants.

2.3 Regulatory Provisions

In connection with performing tests of containment systems, a variety of regulatory requirements must be considered. The major regulatory considerations are summarized below, and the improvements being made in the administration of containment system tests are outlined. The discussion includes sections on the Regulatory Review (Mitchell) Panel, Reactor Design Criteria, AEC Regulatory Staff, and Basic Documents.

2.3.1 Regulatory Review Panel

The Regulatory Review Panel (known as the Mitchell Panel) appointed by the Atomic Energy Commission in 1965 issued a report[16] that has since become a guide for revising regulatory procedures. Many recommendations were made, including the following three that are pertinent to containment system testing and which cover preliminary safety analysis reports, technical specifications, and criteria, standards, and codes:

1. "The AEC should define more precisely and realistically the scope of information to be supplied by the applicant at the construction permit stage. It would be desirable also for the AEC to establish a format for the application and Preliminary Hazards Summary Report to facilitate use by the staff, the ACRS, and the Atomic Safety and Licensing Boards."

2. "Technical specifications should be limited to those aspects of the reactor system which bear a direct relation to public safety, rather than a detailed description of all components of the reactor such as is suggested in Appendix A of Part 50 of the Commission regulations. The Task Force on Technical Specifications, which has been working on this

approach, should be encouraged to complete its work and issue a report. The regulatory staff should adopt the new approach as rapidly as possible and especially on new reactors."

3. "The AEC should continue and intensify its efforts, in cooperation with industrial and professional groups, to develop criteria, standards and codes for nuclear reactors. In the case of criteria, the AEC should assume primary responsibility, with the assistance of industrial and professional groups. In the case of standards, industry, working through professional groups and with the assistance of the AEC, should assume primary responsibility. The AEC should also encourage and assist industry to develop codes for nuclear reactors following the same practices that have been used in other fields."

The first two recommendations resulted in several proposed amendments to the Commission's regulation, 10 CFR Part 50, Licensing of Production and Utilization Facilities,[17] to "(1) establish a revised system of technical specifications which would focus attention on items more directly related to public safety, (2) provide for systematic documentation of the technical and operational bases for specifications, and (3) provide guidance as to the content of preliminary safety analysis reports and safety analysis reports required of applicants for permits to construct, and licenses to operate, production or utilization facilities." The new guide for the organization and contents of safety analysis reports[18] established a uniform format that is very useful in reviewing and assessing the information presented.

The first power reactor technical specifications prepared in accordance with the new standards were submitted for the San Onofre Nuclear Power Plant. A recent Nuclear Safety article[19] discussed the new technical specifications.

The recommendation of the panel concerning criteria resulted in a document that presents 70 general design criteria for nuclear power plant construction permits.[12] These criteria are discussed in the following section.

2.3.2 Reactor Design Criteria

2.3.2.1 General Design Criteria. In a paper presented at the 1966 Winter Meeting of the American Nuclear Society,[20] Commissioner James T. Ramey emphasized the need for general criteria to provide broad guidelines for reactor plant performance. He said, "These criteria will include, for example, the General Safety Design Criteria which are being developed by the Commission and the recently issued Technical Specification Procedure and Guide." He also emphasized that the basic responsibility for safety of a reactor facility rests with the owner or operator.

A revised compilation of general design criteria, which includes 70 criteria pertaining to various design features, was recently issued by the AEC for review and comment by the nuclear industry. Those criteria specifically concerned with containment and containment pressure-reducing systems are presented in Appendix D of this paper. A previous issue of the General Criteria, which included 27 items, was quickly implemented in regulatory matters and was generally accepted throughout the industry.

2.3.2.2 Supplementary Design Criteria. A document entitled "Supplementary Criteria for the Design of Stationary Pressurized-Water Reactor Plants" is being developed by a special task force established under the sponsorship of the N6 committee of the former American Standards Association (latest draft, July 1968). Similar supplementary criteria for BWR power plants are being prepared by a combined General Electric Company and AEC group. Both documents are currently working drafts that are still in the process of development and are not to be given general distribution prior to final AEC review and acceptance. These BWR and PWR supplementary design criteria are being prepared as guides to minimum design requirements, and they represent the general basis for design that is reflected in plants licensed to date. There is no intent to restrict the designer who desires to propose alternate criteria.

The PWR criteria, Section 5.0, Engineered Safeguard Systems, and the BWR criteria, Section 6.0, Containment System, cover the respective containment systems, which include structures, subsystems, and devices relied upon to constitute the containment barrier. In general, both documents use the same codes for steel and concrete containment vessel design, materials,

fabrication, inspection, and proof testing, and refer to the documents discussed in Chapter 3 of this report relative to containment testing. The PWR supplementary criteria also make reference to containment isolation valve criteria, which are to be developed by the committee.

2.3.3 Atomic Energy Commission Regulatory Branch

The Regulatory Branch of the AEC now consists of six divisions, three of which are directly concerned with reactor plant containment testing. These are the Division of Reactor Licensing, the Division of Compliance, and the Division of Reactor Standards. The Division of Reactor Standards assists in the preparation of documents such as the Technical Safety Guide, which covers reactor containment leakage testing and surveillance requirements. The Division of Reactor Licensing is responsible for issuing the construction permit and the final operating license, including the technical specifications that specify the containment system testing and surveillance requirements.

The Division of Reactor Licensing has the difficult task of establishing containment leakage-rate and surveillance requirements for each reactor plant. Among other factors, requirements must be based on (1) the design-basis accident postulated in the safety analysis report (which may take credit for various engineered safety features), (2) federal regulations and criteria adopted by the Commission, (3) reasonable time, manpower, and economic considerations to permit the licensee to operate successfully, and (4) the applicable AEC technical safety guides. It is presently impossible to eliminate judgment from the safety analysis evaluation process.

The Division of Compliance has five field offices located throughout the United States and a staff of inspectors who actually witness strength and leakage-rate tests and evaluate the recorded data and its interpretation, correction, and extrapolation with the tester, who may be the plant operator or representatives of a firm under contract to the owner or operator. When agreement is reached, the inspector certifies the leakage rate, and a report is issued to the Division of Reactor Licensing. These reports are not submitted to the owner, since they can differ with his conclusions, and are considered to be privileged information. The owner is required to keep records of all testing performed; however, established

practice does not require the licensee to submit the initial strength test or subsequent leakage testing procedures, the raw data, or the corrected and extrapolated data to the Division of Compliance. However, copies of the reactor plant owner's testing procedures and test information, including the data obtained and its correction and extrapolation, are made available for review by the inspector.

This procedure is used to avoid issuing a formal report which, in turn, would require a large number of copies and would release the information to the general public. Many of the testing reports that have been made available to date were prepared in such a manner that they are difficult to interpret and evaluate, and therefore no useful purpose would be served in widely disseminating the information.

2.3.4 Basic Documents

Some of the more important documents related to containment system testing are discussed below.

2.3.4.1 Preliminary Safety Analysis Report. This document specifies the design pressure and temperature for the containment structure and tentatively defines the strength-test requirements and the allowable leakage rate for the containment system based on a preliminary analysis of postulated maximum accident conditions. Other information may also appear in amendments.

2.3.4.2 Construction Permit. This document is issued only after review and approval of the overall preliminary safety analysis by the ACRS and the AEC Division of Reactor Licensing (DRL).

2.3.4.3 Final Safety Analysis Report. Shortly before initial loading of the reactor with fuel, a final safety analysis report is issued. This report normally specifies in detail the conditions for the initial preoperational containment leakage-rate tests and includes a proposed technical specification that outlines a suggested program for future periodic and surveillance testing of the containment structure and associated equipment.

2.3.4.4 Operating License. At the time of submittal of the final safety analysis report, the owner applies for an operating license. The

license, which is subject to future amendments and revisions, is granted by the AEC Division of Reactor Licensing after satisfactory completion of their review. The technical specifications are reviewed, revised if required, and approved by DRL, and they then become part of the operating license. The sections in the technical specifications specifically related to containment testing are based on (and/or reviewed on the basis of) the AEC technical safety guide discussed above.

2.3.4.5 Construction Contract. Contractual requirements for containment systems will, of course, vary from plant to plant, but the general intent is to provide the reactor plant owner with assurance that he can easily demonstrate that the completed containment structure and associated systems are performing as intended and as required by the plant technical specifications. The containment manufacturer is usually required in construction contracts to write the test procedures, perform the tests, and complete a final test report that is submitted to the plant owner or his architect-engineer representative. This does not usually cover associated equipment, such as isolation valves, engineered safety features, and penetrations. The contract also usually specifies the provisions to be made in the plant design to facilitate periodic or continuous retesting of the containment vessel and its associated systems.

2.3.4.6 Miscellaneous Documents. This category includes test procedures, schedules, and reports, both internal to the utility and those submitted officially. These documents are extremely important not only to assure the quick and successful performance of each test but also to make the test results useful in planning future similar tests.

3. TESTING TECHNIQUES, EXPERIENCE, AND CURRENT PRACTICE

Containment testing experience has been developed in a number of reactor plants. Data from 11 representative existing reactor plants[21-31] are listed in Table 3.1 in order to present a cross section of this experience for review. In addition, the preliminary testing requirements for six reactor plants[6,32-36] currently being designed and constructed are listed to identify testing requirements being established in current design and licensing action. Table 3.1 also gives power rating and type of reactor, along with names of the companies involved in design, construction, and operation of the plant.

All the plants discussed are light-water cooled and moderated except the Carolinas-Virginia Tube Reactor (CVTR), which is heavy-water cooled and moderated. The CVTR is included in this discussion because proposals for containment system tests that can be conducted at that plant have been prepared in connection with the AEC-sponsored in-plant test program. Of the six new plants, Browns Ferry and Dresden 2 and 3 are believed to be representative of new BWR's; Haddam Neck has a typical PWR reinforced-concrete steel-lined pressure-containment vessel; Indian Point No. 2 is located closest to a metropolitan site; Oconee is a Babcock & Wilcox PWR; and Turkey Point 3 and 4 have fully prestressed steel-lined concrete pressure-containment vessels.

The following discussion of testing techniques, experience, and current practice does not attempt to describe the details of testing techniques or recummarize the large amount of containment systems testing that has been performed on power reactors in the United States. Instead, major conclusions reached as a result of this experience are discussed and a reflection of this experience on the part of industry and government in developing current practice is described. For a complete discussion of testing techniques, reference should be made to the report on U.S. Reactor Containment Technology[1] and to the ANS standard for leakage-rate testing (Appendix C). Tabulations of data from individual containment leakage-rate tests, as well as tests of engineered safety features, are presented in Ref. 1, in an article by Robinson and Horton,[37] and in other documents. A number of leakage-rate test reports have been written by the reactor

Table 3.1. Data on Existing and New Representative Power Reactors

Reactor Name	Electrical Output (Mw)	Type of Reactor	Prime Contractor	Architect-Engineer	Containment Vessel Fabricator	Nuclear Equipment Supplier	Operator
Existing plants							
Big Rock Point	75	BWR	Bechtel	Bechtel	Chicago Bridge & Iron	General Electric	Consumers Power Company
CVTR	17	D_2O, pressure tube[a]	Westinghouse	Stone & Webster	Daniel Construction	Westinghouse	Carolinas-Virginia Nuclear Associates, Inc.
Dresden 1	210	BWR	General Electric	Bechtel	Chicago Bridge & Iron	General Electric	Commonwealth Edison
Elk River	22	BWR	Allis-Chalmers	Sargent & Lundy	Chicago Bridge & Iron	Allis-Chalmers	Rural Cooperative Power Associates
Humboldt Bay	70	BWR	General Electric and Bechtel	Bechtel	Bechtel and Chicago Bridge & Iron	General Electric	Pacific Gas and Electric
Indian Point No. 1	275	PWR	Consolidated Edison	Consolidated Edison	Chicago Bridge & Iron	Babcock & Wilcox	Consolidated Edison
Oyster Creek	670	BWR	General Electric	Burns & Roe	Chicago Bridge & Iron	General Electric	Jersey Central Power and Light
Pathfinder	62	BWR	Allis-Chalmers	Pioneer Service & Engineering	Pittsburgh-Des Moines	Allis-Chalmers	Northern States Power Co.
San Onofre	450	PWR	Bechtel and Westinghouse	Bechtel	Chicago Bridge & Iron	Westinghouse	Southern California Edison
Shippingport	100	PWR	Westinghouse	Stone & Webster	Pittsburgh-Des Moines	Westinghouse	AEC, Duquesne Light Co.
Yankee	185	PWR	Yankee Atomic Electric Co.	Stone & Webster	Chicago Bridge & Iron	Westinghouse	Yankee Atomic Electric Co.
New plants							
Browns Ferry	1100	BWR	TVA	TVA	Pittsburgh-Des Moines	General Electric	TVA
Connecticut Yankee (Haddam Neck)	490	PWR	Westinghouse	Stone & Webster	Stone & Webster and Chicago Bridge & Iron	Westinghouse	Connecticut Yankee Atomic Power
Dresden 2 and 3	753	BWR	General Electric	Sargent & Lundy	Chicago Bridge & Iron	General Electric	Commonwealth Edison
Indian Point No. 2	906	PWR	Westinghouse	United Engineering & Construction	United Engineering & Construction and Chicago Bridge & Iron	Westinghouse	Consolidated Edison
Oconee	874	PWR	Duke Power	Duke Power	Duke Power	Babcock & Wilcox	Duke Power
Turkey Point 3 and 4	728	PWR	Westinghouse	Bechtel	Bechtel	Westinghouse	Florida Power & Light Co.

[a]Heavy-water moderated and cooled.

operators, and some of these are cited in Refs. 38 through 47. Testing techniques, experience, and current practice are discussed below under the headings Strength Testing, Integrated Leakage-Rate Testing, Leakage Surveillance Testing, and Testing of Engineered Safety Features Associated with the Containment System.

3.1 Strength Testing

Pressure vessels of almost all kinds are commonly tested to greater than design pressure before being placed into operation. Although differing in many respects from common pressure vessels, most reactor containment structures built to date have been made of steel and designed and tested in accordance with accepted pressure vessel codes. The strength-testing procedures used for evaluating concrete containment structures are not defined by code requirements and are usually established for each structure on an individual basis. Strength testing, normally performed by pneumatically pressurizing the containment vessel or structure, tests the structure's ability to resist internal pressure loading. The ability of the structure to resist other loading conditions (for example, pipe reactions, air-lock loads, accident reactions that create jets, and accident missiles) cannot normally be experimentally verified, and analytical methods have to be relied on. An important safety consideration, and one that can be overlooked, is the installation of a system to prevent compressor oil from contaminating the containment atmosphere during the pressurizing procedure. This system prevents the formation of explosive mixtures and allows personnel entry at low pressures, if necessary. A system of this type, consisting of aftercoolers, a large filter, and a demister, was used during testing of the Connecticut Yankee (Haddam Neck) Reactor Plant containment vessel. Strength-testing experience at the 11 representative existing plants is summarized in Table 3.2, and Table 3.3 summarizes requirements for the six typical new plants.

3.1.1 Steel Containment Vessels

Most steel containment vessels have been designed and tested in accordance with the ASME Code for Unfired Pressure Vessels, and a number of

Nuclear Case Interpretations have been issued by the ASME Boiler and Pressure Vessel Code Committee to clarify the application of the code to nuclear vessels. The USA Standard for steel containment structures is applicable to containment vessels with design pressures above 5 psig and, with some modification, even to vessels with design pressures below 5 psig. At least one low-pressure containment vessel has also been designed in accordance with API Standard 620, which applies to vessels with design pressures up to 15 psig and operating temperatures up to 200°F.

Section III of the ASME Boiler and Pressure Vessel Code was published specifically to cover vessels used in nuclear installations. Section III classifies containment vessels as class B vessels, and it applies to vessels having a design pressure greater than 5 psig. Subsection B covers class B vessels and incorporates many of the provisions of the Unfired Pressure Vessel Code and the latest Code Case Interpretations for containment vessels.

The ASME Code (Section VIII) requires that vessels designed in accordance with its provisions be pressure tested pneumatically to 1.25 times the vessel design pressure. API Standard 620 also requires a pneumatic pressure test of the completed vessel to 1.25 times the vessel design pressure. Consequently, many containment vessels have been pneumatically tested to 1.25 times design pressure. The 1965 edition of Section III specified that pressure tests for containment vessels be conducted at not less than 1.15 times design pressure when pneumatic tests are made. This reduced requirement came about because Section III allowed design membrane stresses for containment vessels to be 1.1 times those allowed for other code-designed pressure vessels in lieu of the 10% increase in pressure permitted for vessels fitted with pressure-protection devices.

The "Winter 1965 Addenda" to Section III revised the code so that the allowable stress-intensity values are now equal to the allowable stresses tabulated in Section VIII of the code. This requirement is compensated for by allowing the design internal pressure to be 90% of the maximum containment internal pressure. Hydrostatic and pneumatic test requirements are now related to the design internal pressure but require a test pressure in accordance with Section VIII, which is 1.25 times this

Table 3.2. Containment Structure Tests — Existing Plants

Reactor Plant	Containment Geometry	Containment Net Volume (ft^3)	Maximum Accident Conditions			Containment Design Conditions		Bare-Vessel Tests				Preoperational Tests (Penetrations and Installed Equipment)			
								Strength-Test Pressure (psig)	Leakage-Rate Test						
			Pressure (psig)	Temperature (°F)	Leakage Rate[a]	Pressure (psig)	Temperature (°F)		Pressure (psig)	Allowable Leakage Rate[a]	Measured Leakage Rate[a]	Date Performed	Test Pressure (psig)	Allowable Leakage Rate[a]	Measured Leakage Rate[a]
Big Rock	Steel sphere	940,000	20	223	0.5 wt % at 27 psig	27	235	33.75	27	0.5	0.036	6/62	10	0.121	0.021
CVTR	Concrete cylinder with steel top and liner	243,000	19	214	0.5 vol % at 21 psig	21		26.25				1962	21	0.5	0.074
Dresden 1	Steel sphere	2,880,000	29.5	325	0.5%[b] at 37 psig	29.5	325	37	29.5	0.5	0.0187	1959	10	Soap-bubble test only	
Elk River	Vertical steel cylinder	287,000	21	220	0.1%[b] at 21 psig	21	220	26.25	21	0.1	0.05	1962	21.5	0.1	0.09
Humboldt Bay															
Drywell	Steel cylinder	12,500	36	252	0.1[c] vol % at 72 psig	72	650	90	72	0.05	0.025	12/62	10	0.1	0.043
Suppression chamber	Concrete with steel liner	34,300	10/25[d]	130	1.0 vol % at 10 psig	10/25[c]	>130	12.5/25.75				11/62	10	1.0	0.31
Indian Point No. 1	Steel sphere in concrete building	1,845,000	24.2	227	0.1 wt % at 24.2 psig	27.5	230	31.25	25	0.1	0.014	5/62	10	0.1	0.033
Oyster Creek															
Drywell	Steel vessel	180,000	33	275	0.5%[b] at 35 psig	62	281	62		Not available			Not yet performed		
Suppression chamber	Steel torus	127,000				35	150	35		Not available			Not yet performed		
Pathfinder	Steel cylinder	145,000	78	342	0.2 vol % at 78 psig	78	342	97.5	76	0.2	0.04 ± 0.04	11/63	50	0.11	0.083
San Onofre	Steel sphere	1,210,000	46	271.2	0.5 vol % at 46 psig	46.4	271.2	53.4	46.4	0.1		10/23/66	46.4[e]	0.1	0.073
Shippingport	Complex steel structure	510,000	59.0	287	0.15 vol % at 60.9 psig	60.9	287	70				12/57	10	0.065	<0.065
Yankee	Steel sphere	840,000	34.5	250	0.1 wt % at 34.5 psig	31.5	250	40	15	0.1	0.021	None (now done continuously)			

[a]All leakage rates given in units of % per 24 hr.

[b]No information given as to weight or volume percentage.

[c]Recent accident analyses performed with a leakage rate of 10% per day for the drywell and suppression chamber; leakage rates in table are those used in initial design.

[d]Increased from 10 to 25 psig by structural modifications when stainless steel core replaced with Zircaloy in 1965.

[e]Leakage-rate test also run at 23.2 psig; rate measured, 0.055% per 24 hr.

Table 3.3. Containment Structure Testing Requirements for New Plants[a]

Reactor Plant	Containment Type	Containment Geometry and Construction	Containment Net Free Volume (ft^3)	Maximum Accident Conditions			Design Conditions		Bare-Vessel Tests			Preoperational Maximum-Pressure Test		Initial Reduced-Pressure Test		Operational Leakage Monitoring
				Pressure (psig)	Temperature (°F)	Leakage Rate (%/24 hr)	Pressure (psig)	Temperature (°F)	Strength-Test Pressure (psig)	Leakage-Rate Test Pressure (psig)	Leakage-Rate Test Leakage Rate (%/24 hr)	Pressure (psig)	Leakage Rate (%/24 hr)	Pressure (psig)	Leakage Rate (%/24 hr)	
Browns Ferry	Pressure suppression	Flask and torus liner, reinforced concrete	278,000	40 in DW,[b] 25 in PSC[c]	280	0.5	56	281[d]	70	56	0.2	(e)	(e)	(e)	(e)	(e)
Connecticut Yankee (Haddam Neck)	Pressure containment	Cylinder with flat base and hemispherical dome and liner, reinforced concrete	2,232,000	31	260	0.1	40	260	46	(e)	(e)	40	0.25	15	0.153	Yes, 1.5 psig or greater
Dresden 2 and 3	Pressure suppression	Flask and torus liner, reinforced concrete	278,000	39 in DW,[b] 21 in PSC[c]	281	0.5	62	281[d]	71.3	62	0.5	62	0.5	(f)		Yes[g]
Indian Point No. 2	Pressure containment	Cylinder with flat base and hemispherical dome and liner, reinforced concrete	2,610,000	44.2	280	0.1	47	280	54	(e)	(e)	47	0.1	47	(e)	(e)
Oconee	Pressure containment	Cylinder with flat base and shallow dome and liner, prestressed concrete	2,900,000	56.8	286	0.5	59	286	67.9	(e)	(e)	59	0.5	30	(e)	(e)
Turkey Point 3 and 4	Pressure containment	Cylinder with flat base and shallow dome and liner, prestressed concrete	1,550,000	58.7	286	0.25[d]	59	286	67.8	(e)	(e)	59	0.25[h]	29.5 14.75	(e) (e)	(e)

[a]Information on approved test pressures and frequencies of periodic tests is not available at this time.

[b]DW = drywell.

[c]PSC = pressure-suppression chamber.

[d]For both drywell and pressure-suppression chamber.

[e]Undefined at this time.

[f]A series of preoperational reduced pressure tests will be run, and the reduced pressures for periodic tests will be determined after a review of the results of these tests.

[g]Inert atmosphere system to be used to add pressure.

[h]Percent by weight of contained volume.

value. The net results of these changes (which have been applied to Browns Ferry) are (1) that the initial leakage-rate test is conducted at a lower test pressure, and (2) the required material compensation at openings is reduced by almost 10%.

Pneumatic pressure-strength tests of containment vessels are commonly conducted before the installation of any concrete or equipment within the structure. Air locks and doors that are part of the pressure-containing structure are normally installed and subjected to the pressure test. In an air lock, both doors are pressure tested; this is done by pressurizing the air lock after the containment vessel test pressure has been reached with the inner door closed. Penetrations that are to be used for piping and wiring are made in the vessel prior to the test but are often blanked off during the strength test. The strength test is followed, either immediately or after installation of reactor equipment and penetrations, by an integrated leakage-rate test of the containment structure.

After the pressure test has been completed (with the pressure normally held for 1 hr), all seams of the vessel are visually inspected. This may be accomplished with a soap-bubble test immediately following the strength test. The procedure requires that all seams of the vessel be accessible at the time of the test and precludes placing any concrete either inside or immediately outside the vessel walls prior to the test. However, ASME Code Case 1272N-5 and Section III allow an exception to this procedure for multiple-stage construction, in which concrete may be placed over some of the welded joints before the vessel is completed provided all joints are completely radiographed and there are no penetrations in the area covered by the concrete. When the vessel is completed, a pneumatic pressure test is conducted.

The requirements for strength testing containment structures other than the conventional steel pressure-containing type are not standardized and must be established for each case.

An interesting construction method has been developed to provide free space around installed containment drywell vessels in BWR plants.[48] The space width is established by vessel thermal expansion considerations (due to maximum accident conditions) and the possible release of missiles that would require close backup by the concrete to prevent puncture of the steel

wall. A bare-vessel expansion process is employed that exposes the vessel to 40 psia at 180°F. This method presents an opportunity to install temporary instrumentation and obtain data for a partial correlation of expected vessel stresses under accident conditions.

3.1.2 Reinforced-Concrete Containment Structures

Reinforced-concrete structures are normally built in accordance with Standard ACI-318 (or USA A-89.1), Building Code Requirements for Reinforced Concrete. Pressure tests for demonstrating structural integrity are not required under this code, largely because reinforced concrete is not often used for pressure vessels. However, if the design pressure of the concrete structure is sufficiently high that good engineering practice dictates a pressure test, the test requirements of a standard pressure vessel code, such as the ASME code, can be adapted on a case basis. A provision for structural testing of concrete structures will probably become a standard requirement of licensing acceptance. The current practice followed in strength testing concrete containment structures is not related to the requirements of the ASME code. Because of the structural nonhomogeneity introduced by the combination of constructional materials (i.e., steel and concrete), the vessel designers attempt to calculate the maximum test pressure that will not overstress the concrete wall section and yet will provide a stress pattern in the liner as close as practical to that predicted under accident loading.

This value of test pressure for several containment structures coincidentally agrees with the 115% of design pressure initially specified for steel containment vessels built in accordance with Section III of the ASME code. It should not be interpreted, however, that this value is appropriate for all concrete containment structures.

A metal liner is usually used to assure low leakage from a reinforced-concrete containment structure. The liner does not add to the structural strength, but it maintains leaktightness, even if the concrete cracks when the structure is pressurized beyond the tensile strength of the concrete.

The Haddam Neck plant has a reinforced-concrete containment vessel, which was recently strength tested.[49] The operator found that some testing details were not specifically dictated or controlled by existing codes or

practices, and judgment based on experience was followed in some instances. AEC requirements led to the following amendment to the license application (included in Amendment No. 15 to License Application Docket No. 50-213, submitted March 23, 1967):

"Item B — Structural Acceptance Criteria for the Containment

"Question:

"Quantitative and qualitative acceptance criteria to be used in evaluation of containment pressure tests.

"Answer:

"The following criteria are proposed as a measure of containment structural performance during and after the strength test at 40 psi gage:

"(1) The maximum vertical elongation of the structure shall not exceed 1.2 in.

"(2) The increase in containment diameter shall not exceed 1.3 in.

"(3) The maximum concrete crack width shall not exceed 1/32 in.

"(4) When containment pressure is reduced to atmospheric, the width of any cracks which have developed in the concrete during the test shall not exceed 0.010 in.

"(5) There shall be no visual distortion of the liner plate.

"The first two criteria correspond to calculated elastic deflections of the structure under 40 psi gage pressure, increased by 20% to allow for potential errors in measurement. The stress in the steel reinforcement corresponding to these deflections is approximately 19,000 psi, compared to a minimum yield strength of 50,000 psi. Adherence to these criteria will insure that no gross yielding of the structure has taken place.

"The maximum crack width of 1/32 in. is specified to insure that local yielding does not occur, and the concrete is able to transmit shear forces to the steel liner. The value of 1/32 in. was proposed by the AEC Staff consultants and was accepted by Connecticut Yankee.

"As long as the structure remains in the elastic range, no permanent distortion should exist in the liner or in the concrete once the pressure is reduced to atmospheric. Strain in the liner will be measured throughout the test by strain gages located at various points on the liner, and particularly around the main equipment hatch.

"Both the liner and the concrete will be visually inspected after the test. Only very small, hairline cracks in the concrete (<0.010 in.) will be considered acceptable and no visual distortion of the liner will be tolerated. However, it is fully expected that there will be small residual cracks as a result of shrinkage in the concrete.

"If any of the foregoing criteria are not met, it is intended that a critical review of the test results will be performed with the Staff and its consultants, in order to determine the reasons for failure to meet the criteria, and the course of action required. In any case, a report will be prepared documenting the conditions of the test and the results of all measurements. This report will be submitted to the AEC staff."

Nine days were required to complete the test program. Many linear variable differential transducers (LVDT) were used to monitor concrete wall movement, and optical devices were employed to observe concrete cracking. No excessive cracking or deformation occurred, and the tests demonstrated that each of the criteria was satisfactorily met. Figure 3.1 shows a typical PWR reinforced-concrete containment vessel.

3.1.3 Prestressed-Concrete Containment Structures

Prestressed-concrete structures are designed to maintain the concrete in compression and thus prevent its cracking. Nevertheless, since concrete is relatively porous, a metal liner is used to provide a leaktight structure. A typical example of a prestressed-concrete containment structure is that of the Turkey Point 3 plant. This PWR plant has a containment structure consisting of a steel-lined, prestressed, posttensioned concrete cylinder with a shallow-domed roof and a foundation slab. The design is based on a state building code and applicable sections of ACI Code 318.

Figure 3.2 shows a typical prestressed concrete containment structure. Testable liner weld-joint channels are utilized in the floor liner, which is embedded in concrete.

Since Turkey Point 3 is one of the first vessels of this type being built (others include Turkey Point 4, Palisades, Point Beach, and Oconee 1 and 2), the analytical design will be verified by installing strain gages at strategic locations in the containment vessel to continuously monitor stress development during the initial pressure test. The stress in a representative number of tendons, the stress in the liner plate, and the

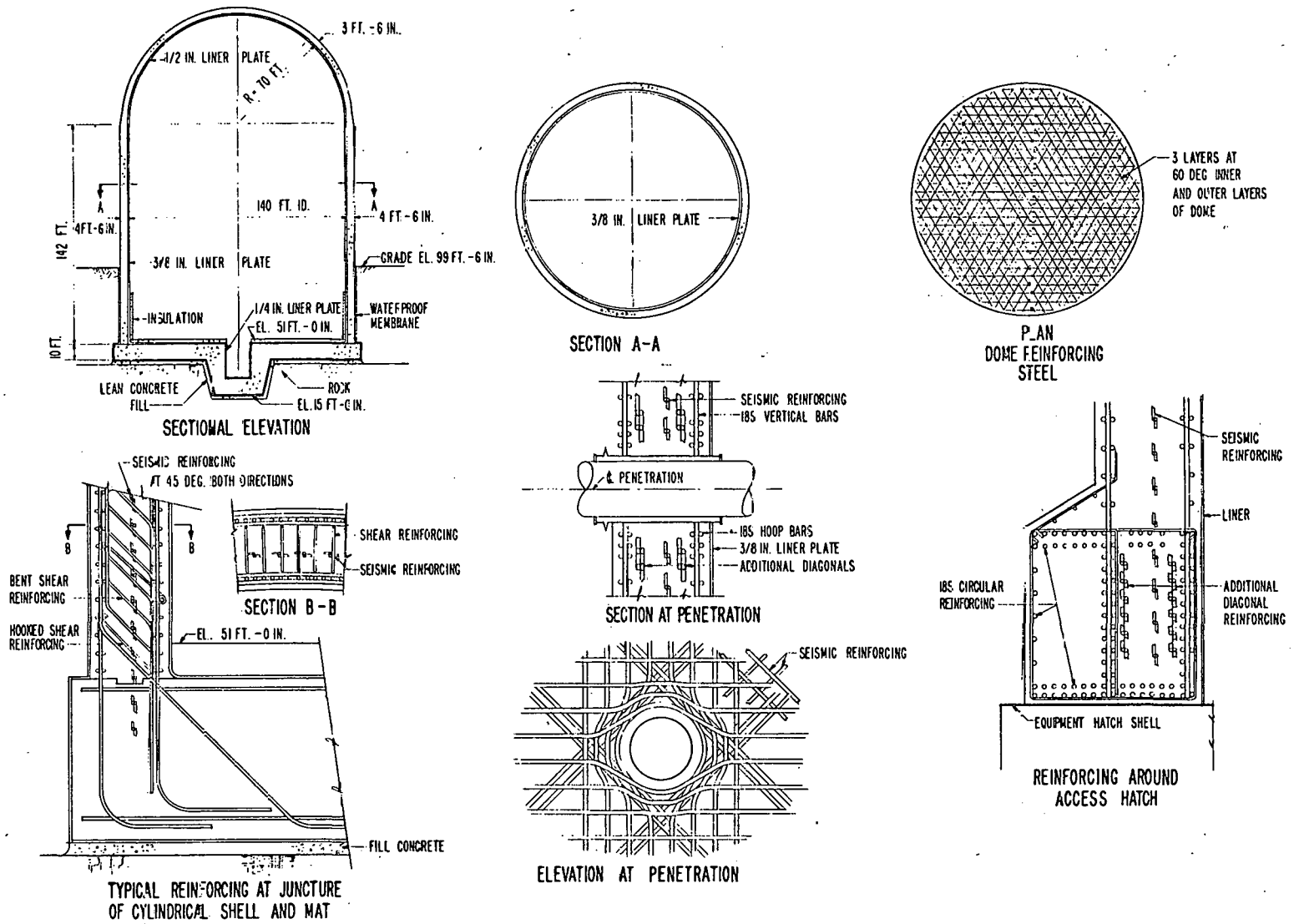

Fig. 3.1. Typical Reinforced Concrete Containment Structure. (From Ref. 50)

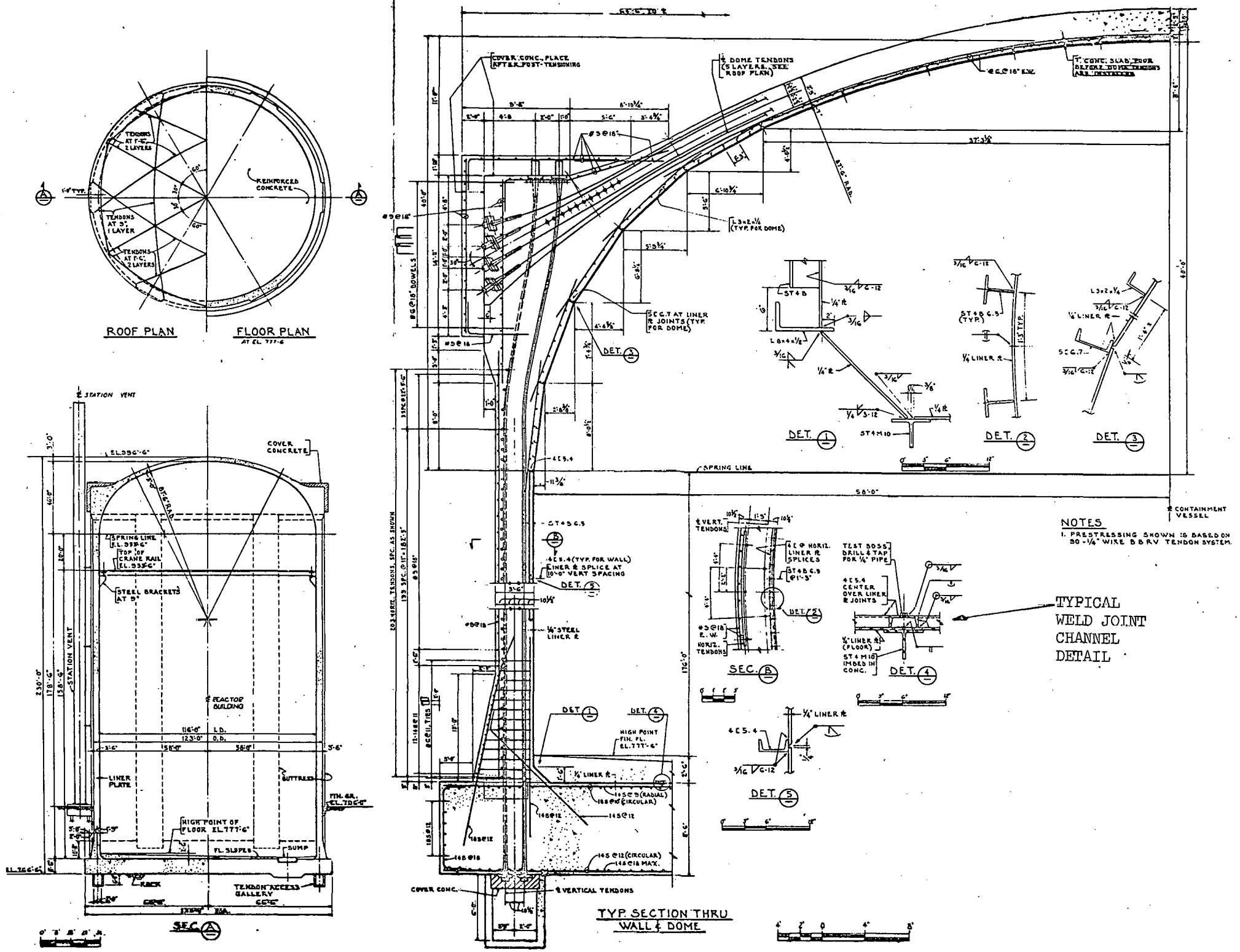

Fig. 3.2. Typical Prestressed-Reinforced-Concrete Containment Structure. (From Ref. 36)

compression or cracking of the concrete will be measured and compared with values predicted from the final structural analysis. Stresses and strains at critical sections, such as at the ring girder, cylinder base, and at large penetrations, will be measured. The testing program represents a substantial extension of a comparable one proposed for the Brookwood[51] containment structure. However, the stress and strain patterns in the Turkey Point and Palisades containment structures are more complex because of the interactions of a multiplicity of tendon systems. Typical measuring instruments include

1. encapsulated strain gages attached to reinforcing bars in representative sections of dome, shell, base, and opening,
2. surface strain gages to measure strains at concrete surfaces,
3. Carlson strain meters embedded in concrete adjacent to resistance strain gages on reinforcing bars,
4. dial gages for measuring overall section displacement (read to 0.0001 in.),
5. electric-resistance gages to detect concrete crack propagation, supplemented by epoxy coatings for visual observations,
6. strain rosettes and gages to measure liner strains inside and outside, as well as at selected openings,
7. thermocouples to measure normal temperature gradient changes in the concrete walls and liner,
8. load cells to measure tension in a selected group of tendons.

All these instruments have adequate sensitivity for the measurements to be taken. The program permits taking over 350 individual measurements at ten different pressure levels while ascending in pressure to the proof-test pressure and at five different pressure levels while descending in pressure.

All conduits for prestressing tendons will be checked in place for integrity, alignment, and position in forms. The stress in the tendon will be determined by measuring the tendon elongation during jacking and also by either checking the jack pressure on a recently calibrated gage or by using a recently calibrated load cell. The entire structure will be pneumatically strength tested at 1.15 times the design pressure.

The in-service reliability of the prestressing-tendon system selected (BBRV tendons unbonded and protected with wax) constitutes the most important factor in evaluating its ability to preserve the integrity of the containment structure. The surveillance program, as proposed, provides for the following inspections:

1. lift-off measurements to verify the tendon tension in one set of hoop shell tendons, three vertical shell tendons, and three dome tendons,
2. the removal of tendon wires (extras intentionally included for this purpose) to check for evidence of corrosion,
3. testing of removal wires to detect any significant changes in physical properties,
4. periodic sampling and testing of the tendon protective wax.

Frequency of testing will be established at a later date, along with inspection standards, acceptance criteria, and corrective measures as required.

3.1.4 Composite Structures

The pressure-suppression system used in the Humboldt Bay plant[41] is a special case of a steel system (the drywell and vent piping) and a steel-lined concrete structure (the suppression chamber). Where possible, the load-bearing steel portions of structures of this type are pressure tested according to the ASME code prior to pouring or grouting concrete around them so that all seams are accessible for inspection following the pressure test. Although the designs of the drywell and vent piping are based on dynamic loading conditions, these structures are tested statically to greater than the maximum expected dynamic pressure by providing suitable temporary closures on the vent piping. The Humboldt Bay drywell and vent piping were designed as a code vessel and were tested to 1.25 times the design pressure. Although the Humboldt Bay suppression chamber is a concrete structure with the steel liner that provides only leaktightness, a specification of the licensing agreement was that it would be pressure tested to 1.25 times the design pressure to meet the intent of the ASME code, even though the code does not apply to structures of this type.

Both the drywell and pressure-suppression chamber of newer BWR's are of all-steel construction and are based on the same design conditions. They are simultaneously strength tested at the same pressure.

3.1.5 Conventional Buildings

Conventional types of building structures are being used as secondary containment barriers in current BWR plant designs, and no significant pressure buildup within the building is hypothesized. Normal building codes are used for the structural design, and the structure is not subjected to a pressure test. Leakage-rate tests that may be conducted at small positive or negative pressure differentials may impose a substantial structural load on the building, but they are not intended as structural tests. The building design must take into consideration the load imposed by the leakage-test pressure.

3.1.6 Multiple-Barrier Containment Structures

The primary structural member of a multiple-barrier containment system may be any one or a composite of the individual barriers. As such, all barriers internal to an outer structural barrier must transmit any remaining internal pressure load to this outer structure, and any structural test must demonstrate the ability of all internal barriers to transmit this load, as well as the ability of all structural members to withstand their respective shares of the imposed load. An example of multiple containment is that of the proposed Malibu Plant,[7] which utilizes two 1/4-in.-thick steel membranes separated by a 2 1/2-ft space filled with popcorn concrete. A 4-ft 2-in. reinforced-concrete wall surrounds this structure. The design meets the Building Code Requirements for Reinforced Concrete (ACI-318), and the entire structure is to be given a pneumatic test at 1.15 times the design pressure for 1 hr.

3.2 Integrated Leakage-Rate Testing

This section describes the basic techniques used in performing integrated leakage-rate tests, discusses error analyses of the absolute and reference system methods, and outlines calculational methods used to

analyze test data. In addition, requirements for initial bare-vessel leakage-rate tests, preoperational leakage-rate tests, periodic retesting and continuous low-pressure integrated leakage-rate testing are described.

3.2.1 Methods of Performing Integrated Leakage-Rate Tests

Two general methods of pressure-decay leakage-rate testing that have been applied to containment systems are the absolute and reference-vessel methods. Both test methods have been fully described in the literature (Refs. 52–58). Various techniques, such as measurement of makeup gas, superimposed controlled and measurable leaks, resistance thermometry, and introduction of adulterant gas, are utilized to verify the pressure-decay-test results. Accurate humidity measurements are also required to prove valid results.

The ANS proposed standard for leakage-rate testing, discussed in Section 2, above, and printed in Appendix C, is now being used as a basic reference by the AEC and industry. Leakage-rate test methods, equipment, and test procedures are covered in some detail. Three appendices, which are not part of the standard, are included for informational purposes. They set forth local leak-testing procedures, the derivation of formulas for leakage rates, and a suggested method for verification of leakage-test accuracy.

The two general methods of integrated leakage-rate testing now used in the United States are briefly described below.

3.2.1.1 Absolute and Reference-Vessel Methods. Both the absolute and reference-vessel methods have the same basis; that is, they determine air and moisture weight losses from the containment structure on the assumption that the perfect gas laws are valid. The reference-vessel method is the more complex of the two methods, since the same measurements must be made plus additional measurements on the reference system to (1) insure adequate temperature compensation or correction for thermal lag, (2) insure a leaktight system or correct for leakage, and (3) insure proper hygrometry or correct for condensation. The reference-vessel system must also be built, installed, and tested.

The reference-vessel system was conceived to eliminate the necessity of recording, correcting, and interpreting temperatures by assuming that

the containment and reference vessel atmosphere temperatures are equal. There is always some temperature lag, and its significance relative to a specific test should be measured. A relatively small lag in temperature could easily result in errors that might invalidate the test results, and therefore elimination of this factor reduces the work involved in interpreting results and in calculations required to establish an apparent acceptable leakage rate. Bare-vessel tests with exposure to weather and large temperature changes have given results that were scattered and presented a difficult analysis problem. Eliminating the scattered data led to more credence in the results and their acceptance by the AEC compliance staff. Since in the reference-vessel method a two-legged light-liquid manometer is usually used for measuring pressure changes, rather than the mercury barometer used in the absolute system, accuracy of determining the pressure change is improved by one-half the ratio of mercury density to manometer-liquid density. This is a factor of 6.8 if the manometer liquid is water and equal precision of linear measurement is possible. Both systems have the same precision in determining temperature changes. Thus scatter of data points has usually been less for the reference-vessel system when temperature lags are small, and the absence of scatter engenders confidence in the results for low leakage rates. However, many reference-vessel leakage-rate tests have not included all necessary measurements, and as a result contentions regarding leaktightness of the reference vessel and negligible temperature lags have not been proved.

A principal difficulty and major source of error in determining the leakage rate is that of obtaining an accurate and truly average temperature for the total volume of air in the containment vessel. Not only will the average temperature vary throughout the test period, but the spatial temperature distribution within the containment vessel at any one time will also vary. It is important that sufficient temperature measurements be taken to adequately represent the entire volume of air. If pockets, or cells, of air exist in the containment vessel, each of these should contain a temperature-measuring device, and the temperature reading from each cell should be weighted by the approximate volume of the cell so that a true weighted-average temperature is obtained. The temperature variations throughout the vessel can be reduced by circulating the containment air

during the test with the use of the normal containment ventilation system blowers or temporarily installed blowers. Circulating the air will also improve heat transfer to the temperature-measuring instruments and make humidity measurements more reliable.

An additional important test to be considered when using the reference-vessel method of testing is the verification of the leaktightness of the reference system after the leakage-rate test is completed. Although the reference system leaktightness is generally established prior to the performance of the leakage-rate test, it is not inconceivable that leaks in the reference system may develop during the test interval that will invalidate the leakage-rate results. The fractional leakage rate of the reference system should be at least an order of magnitude smaller than the allowable fractional leakage rate of the vessel.

Measurements of allowable leakage flow rates in the reference system require detection of exceptionally small leaks. Such leaks require a totally different method of testing than that considered acceptable for the containment vessel. To quantitatively measure the leakage flow rate of the reference system accurately, the mass spectrometer type of leak detector has been employed in some tests. The reference system is pressurized with helium and air and all critical potential leak points of the reference system are checked. Alternatively, the reference system leakage may be determined by evacuating the system and then measuring the rise in pressure in a unit of time (i.e., μ Hg/hr) by using instruments commonly employed in the field of vacuum technology. This method measures inleakage, however, and temperature corrections are still necessary.

Any significant leakage rate of the reference system as quantitatively determined after the completion of the leakage-rate test must be directly applied to correct the measured leakage rate of the containment vessel. Unless the leakage rate of the reference system is determined by means of an appropriate test, the validity of the measured leakage rate of a containment vessel cannot readily be established.

An example of a successful leakage test performed by using the reference method was a test conducted at the Plutonium Recycle Test Reactor (PRTR) in 1964. The reactor was tested[57] at 14 psig by using a servomanometer having a resolution in the measurement of differential pressure

of 0.002 in. H_2O. The entire reference system, including the servomanometer, was within the containment vessel, so only electrical penetrations through the containment wall were required for the instrument. Analyses of test data on the PRTR based on 3-min interval readings over an initial 15-min period encouraged the operator to predict immediately that an adequate leakage rate had been obtained and that a successful test was under way. With instrumentation comparable to the servomanometer, it was demonstrated that a leakage-rate test could be completed in a time interval much shorter than 24 hr; however, this particular test was for a relatively large leakage rate of 1.0 wt %/day, and lower leakage rates would require proportionately longer data-reading intervals.

More recently tests were conducted at the PRTR[59] when the operational safety limits for the reactor were revised to conform with the AEC Technical Safety Guide. The test requirement was changed from the former 1% in 24 hr at the vessel design pressure of 15 psig to 0.90% in 24 hr at the design-basis-accident pressure of 10 psig. The final leakage rate obtained by using the reference-vessel method was 0.43 ± 0.026%/day, compared with an allowable operational leakage rate of 0.678%/day. The test was conducted for 24 hr, followed by a 6-hr superimposed leakage-rate test. Oil and water separators were used with the pressurizing compressors, and personnel safely entered the vessel to effect repairs while it was pressurized at 10 psig.

The temperature lag in the reference system can be reduced by using a leaktight system made of small tubing having good thermal conductivity. A measure of reference vessel performance can be obtained by plotting the temperature and differential pressure data obtained as a function of time. In this way, any leakage in the reference system or a lack of temperature compensation will become readily apparent. Also, thermal lag will be apparent, and, in some cases, it may be possible to apply suitable compensating corrections. Although thermal lag may cause the differential pressure to vary over a wide range throughout the day, the variation will be similar from day to day and thus can be approximately accounted for on the basis of diurnal temperature changes. However, the economic incentive to limit the test time would be an opposing effect. It has been customary, as with the absolute method, to begin and end the test in early morning

hours to take advantage of the relatively stable atmospheric conditions at that time of day. This should be less important in the new concrete containment structures because of the insulating effect of concrete and the resulting stability of containment atmospheric conditions.

The majority of initial and periodic integrated leakage-rate tests of reactor containment structures that are operational or are being designed and constructed in the United States have been performed by using the reference-vessel method. Recent exceptions are the planned use of the absolute method for testing the R. E. Ginna Station of the Rochester Gas and Electric Company and the new ice-condenser containment system recently adopted by Westinghouse Electric Company.

A number of containment leakage-rate tests have been performed by using both the absolute and reference methods at the same time in order to obtain comparative data on the two methods.[56,57,60] Leakage-rate determinations from both the absolute and reference methods are usually in substantial agreement, but it should be pointed out that temperature variations have been very small in most of the tests conducted. Because of this, the comparison is based almost entirely on pressure-reading errors. Assumptions with respect to temperature behavior and errors in temperature readings are not checked in any way. A true comparison can only be made if temperature errors predominate.

A report by Keshock[56] comparing the absolute and reference system methods of measuring containment-vessel leakage rates has been quoted and used to justify the choice of the reference-vessel method for other specific containment system tests. The report states that the reference method is a more accurate means of measurement than the absolute method and, in general, has been misunderstood and misused by others attempting to select a method of performing leakage-rate tests. General summary statements are made by Keshock without the qualification that they apply only to those specific tests conducted at the Plum Brook Facility. A comprehensive review of this report and its companion report[54] has been prepared by Brittan of Argonne National Laboratory, and it appears as Appendix E of this report. Brittan demonstrates how the misinterpretations and misuses came about and attempts to change the emphases of various

statements, redirect results used in forming the conclusions, and remove apparent ambiguities.

A recent leakage-rate test at the Connecticut Yankee Reactor Plant at Haddam, Connecticut, was conducted at 40 and 15 psig by using both the absolute and reference-vessel methods. A comparison of results gave the following:

Method	Leakage Rate (%/day)	
	At 40 psig	At 15 psig
Absolute	0.0426 ± 0.0038	0.0410 ± 0.0095
Reference vessel	0.0538	0.0478

The license limit specifies a maximum leakage rate of 0.25% of contained volume in 24 hr at 40 psig (original PSAR indicated a 0.1%/day rate at 40 psig). This plant consists of a PWR with a reinforced-concrete containment structure that has a net free volume of 2.33×10^6 ft^3. The test report[60] indicates that both testing methods yielded acceptable results that were well below the allowable leakage rate values. In these tests the temperature variation was very small.

It is concluded in the test report that the absolute method is preferable to the reference method because of simplicity of test preparations, instrumentation, and calculations. A computer system is utilized to calculate leakage rates based on the absolute method. Leakage rates can be determined in approximately 24 hr and verified in about 3 hr by metering the pump back of a quantity of air of the same magnitude as the indicated leakage. The computer is also used to monitor leakage by using the continuous low-pressure leakage-testing system, which operates at approximately 1.5 psig. Containment pressure is recorded every other hour, and when the pressure decreases to a prescribed limit, the container is recharged to 1.5 psig. The air charge is metered to provide a direct measure of leakage over the period since the last charge.

It appears that the absolute method of integrated leakage-rate testing will be used for testing many future large power-reactor containment structures. The use of large concrete-encased structures, with their

inherent stable temperature conditions, is a major factor in the selection of this method.

In conclusion, the selection of a leakage-rate testing method involves the consideration of many factors. The method chosen must be applicable to (1) the containment system being considered, (2) the required sensitivity of the test, and (3) environmental conditions. Additional considerations are time and personnel training, cost and availability of special equipment, and future applicability of the installed system. For very low leakage rates, both the absolute and reference methods of leakage rate determination are marginal. The selection of one method over the other is a question of whether a system of temperature sensors or a reference system can better represent the average temperature of the containment air and which system is more convenient to install and operate. There is no clear advantage for either method. Past experience, economic and technical factors, data processing, and administrative considerations will all play a part in the choice of a method for a specific containment application.

3.2.1.2 Experimental Checks of Leakage Rates. An experimental method often used to verify the leakage rate of a containment system is to superimpose a known leakage rate on the existing leakage rate during the latter part of the test. The degree to which the increase in the observed leakage rate equals the additional known leakage rate will then provide an additional basis for determining the validity of the test. The leak orifice is usually chosen to provide flow approximately equivalent to the leakage rate specified for the containment vessel. Specific details regarding this method are outlined in Appendix C of the Proposed Standard for Leakage Rate Testing (ANS 7.60, in Appendix C of this report).

Other checks can be used, such as checking the leakage at each of the penetrations and comparing the sum of the individual leakage rates with the total system leakage rate. This approach can also be applied when using penetration and weld-channel monitoring systems. The pump-back or makeup-air approach is often used whereby air is pumped or bled into the containment structure via a calibrated flowmeter until the pressure is reestablished at its initial value. This quantity is then compared with the total observed loss during the test. The pump-back principle can be used

for continuously monitoring the leakage rate of multiple-barrier containment systems (such as Malibu), which employ two steel shells with the annulus between them filled with porous concrete maintained at a negative pressure zone. With this method, all gases leaking through the inner and outer steel liners are collected during operation and retained within the containment vessel.

3.2.2 Calculational Methods of Analysis

3.2.2.1 Leakage Rates. Leakage rates (wt % of containment volume in 24 hr) are usually based on calculations of the type described in the proposed ANS standard (Appendix C). Section 7 of the standard covers computation of leakage rates, and the derivations of formulas used are given in Appendix B. The formulas are of little use because the pressures P_1 and P_2 are air pressures rather than total pressures (air plus water vapor), which are the quantities measured by the pressure sensors. The formulas given for correcting for water vapor are not accurate because of an assumption of no volume change. Although the formulas in the standard are two-point in basis (i.e., initial and final readings are used to calculate the rates), in a number of cases the "initial" and "final" readings are actually averages of groups of readings. The latest draft of ANS 7.60 requires that leakage rates be calculated on an hourly basis for at least 24 hr. The specific formulas that were used for most of the existing reactor plants were tabulated in a recent Nuclear Safety article.[37]

Precise formulas for both methods have been developed by Brittan and are presented in Appendix F, which includes a discussion of volume and humidity corrections. These formulas for the fractional leakage rate, which are based on assumptions that (1) the temperatures stay above the dew point, (2) products of fractional changes can be neglected, and (3) the perfect gas laws hold, are

1. for the absolute method,

$$L = \left(\frac{\Delta P}{P_1} - \frac{\Delta T}{T_1} + \frac{\Delta V}{V_1}\right)\frac{24}{\Delta t} ,$$

2. for the reference-vessel method,

$$L = \left[\left(\frac{\delta P_1 - \delta P_2}{P_1}\right) - \left(\frac{\Delta T}{T_1} - \frac{\Delta T_R}{T_{R_1}}\right) + \left(\frac{\Delta V}{V_1} - \frac{\Delta V_R}{V_{R_1}}\right)\right] \frac{24}{\Delta t},$$

where

L = fractional leakage rate per 24 hr,

P = absolute pressure,

T = absolute temperature,

V = volume,

t = time in hours,

$\delta P = P_R - P$,

Subscript 1 denotes initial value (at t_1),

Subscript 2 denotes final value (at t_2),

Subscript R denotes reference system,

Δ denotes change in variable during $\Delta t = t_2 - t_1$.

A considerable number of tests has been conducted at pressures above and below the design pressure. Maccary and his co-workers[61] have extensively studied tests of this type to determine the validity of extrapolation formulas. Their study, which is discussed in Ref. 1, resulted in extrapolation formulas for virtually every conceivable flow regime and, in addition, an examination of the application of formulas to actual test conditions. They found that the turbulent flow extrapolation formula had good correlation for the overpressure test and, under some conditions, the laminar flow formula correlated well with the reduced-pressure tests. However, tests on the N.S. Savannah revealed that leaks may exist for which the leakage-path area is directly dependent on the pressure of the test. Several installations have used the laminar or modified laminar extrapolation formulas for interpretation of test results. Other installations have correlated the data by "best-fit" formula methods, in which cases the formulas have not been developed from basic flow equations but, rather, from observation of test data for that specific reactor containment structure.

A complete discussion on the nature of leakage, including molecular diffusion, molecular flow, viscous-laminar flow, turbulent flow, and orifice flow regimes is given in Chapter 10 of Ref. 1. The variation of leakage rate with pressure, extrapolation of leakage rates, and extrapolation factors are also covered.

3.2.2.2 Error Analyses. Brittan[62] has discussed error analysis and developed the "possible" error expressions for both the absolute and reference-vessel methods of leakage-rate testing (see App. F). Expected errors, if properly estimated, permit a determination of the degree of uncertainty in the results of the tests prior to testing. Such an analysis is useful in determining in advance the resolution and the accuracy required in the instrumentation to be used in performing the test. Excerpts from Brittan's discussion follow:

"There are two types of error analysis available to those planning and conducting leakage rate tests. One deals with possible error, the other with probable error. The former is required in planning the tests and as a proof of minimum detectable leakage rate. The latter is used in assessing the credence of the test after it is performed.

"The 'possible' error analysis determines the limitation on leakage rate determination imposed by possible errors in reading instruments or by limits of accuracy of the instrumentation." Such an analysis "assumes that every reading error or lack of built-in accuracy is in such a direction (+ or −) that the total possible error is maximum. Comparison of this maximum with the expected or required magnitude of the leakage rate to be determined allows one to select the precision of instrumentation required to make the possible error a desired fraction of the leakage rate (e.g., 1/3 or 1/2).

"It may be shown after a test that probability laws yield much lower errors with high confidence (e.g., 95% or 99%) under favorable conditions." Such a "probable" error analysis may also take into account increased accuracy available through multiple observations of a single variable. Thus the probable leakage rate calculated may be proclaimed (with low error) with high confidence. It does not absolutely preclude the possibility of the particular test having the maximum possible error.

Possible Errors. The following possible error expressions are fully developed in Appendix F of this report, which also includes sections that discuss hygrometry corrections, volume corrections, and low-pressure tests. If errors due to correcting for hygrometry and volume are neglected, the maximum possible significant error fractions for both systems are the following:

1. for the absolute method,

$$E_L = \frac{24}{\Delta t}\left(\frac{2E_p}{P} + \frac{2E_T}{T}\right),$$

2. for the reference-vessel method,*

$$E_L = \frac{24}{\Delta t}\left(\frac{4\mu E_H}{P} + \frac{4E_T}{T}\right),$$

where

E_L = maximum possible error in fractional leakage rate in 24 hr,
E_H = inches of water error for each leg of manometer,
E_p = inches of mercury error,
E_T = degrees Rankine error,
L = fractional leakage rate,
P = absolute pressure, in. Hg,
T = absolute temperature, °R,
μ = 1/13.6 = ratio of density of water to density of mercury [pressure error is a linear distance increment; where liquids of different specific gravities may be used, the ratio of specific gravities (i.e., another μ) must be used to determine the error for a particular liquid compared with water],
Δt = test time in hours.

Graphs from which E_L may be found for both the absolute and reference methods are also developed in Appendix F and displayed in Fig. 3.3. In

*In previous analyses (Refs. 1, 52) it was not recognized that in determining the differential pressure, a double error could be made, since each leg of the manometer must be read. If another single type of pressure differential measuring device is used, the coefficient of the first error component can be reduced from 4 to 2.

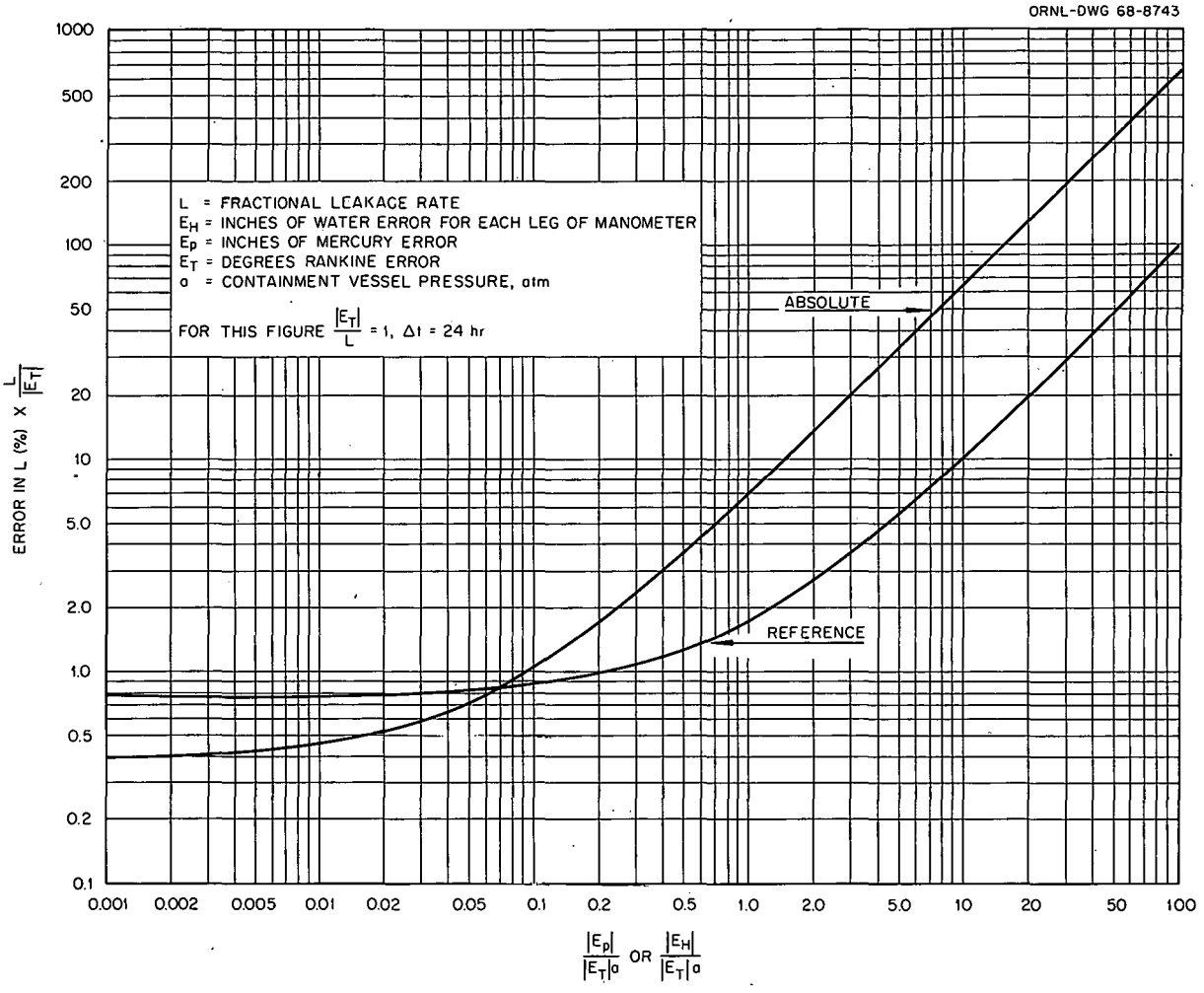

Fig. 3.3. Maximum Possible Error in Leakage Rate Obtained by Absolute and Reference Methods.

using these, "a" is the pressure in the containment structure in atmospheres, and it is assumed that T = 520°F. The following formulas were used to develop the curves of Fig. 3.3:

1. for the absolute method,

$$\text{Error in L (\%)} = \frac{100}{L} E_L = \left(0.39 + 6.7 \frac{|E_p|}{|E_T|a}\right) \frac{|E_T|}{|L|} \frac{24}{\Delta t} ,$$

2. for the reference method,

$$\text{Error in L (\%)} = \frac{100}{L} E_L = \left(0.77 + \frac{|E_H|}{|E_T|a}\right) \frac{|E_T|}{|L|} \frac{24}{\Delta t} .$$

The error in L shown in Fig. 3.3 is for Δt = 24 hr and $|E_T|/L = 1$.

To obtain error percentages for other values of Δt and $|E_T|/L$, values from the curves must be multiplied by $24/\Delta t$ and by $|E_T|/L$. Figure 3.3 shows that for the same precision of linear measurements, the reference method gives smaller error percentages in L for values of $|E_p|/|E_T|a > 0.067$, and larger error percentages for values of $|E_p|/|E_T|a < 0.067$. As an example, let

$$L = 0.001 \text{ for 24 hr},$$
$$\Delta t = 12 \text{ hr},$$
$$E_p \text{ and } E_H = 0.1 \text{ in. Hg and } H_2O, \text{ respectively},$$
$$E_T = 0.1°R,$$
$$a = 2 \text{ atm},$$

then

$$\frac{|E_P|}{|E_T|a} \text{ and } \frac{|E_H|}{|E_T|a} = 0.5 \text{ and } \frac{|E_T|}{L} = 100 .$$

The absolute method yields $3.74 \times 100 \times 2 = 748\%$ error in L, and the reference method yields $1.27 \times 100 \times 2 = 254\%$ error in L. If the precision of measuring the pressures were increased to 0.01 in., the errors in L for the absolute and reference methods would be 145 and 164%, respectively.

Primary use of the possible error analysis is to determine before the test the necessary precision of temperature and pressure measurements required to keep the error a reasonable fraction of the leakage rate. If, for example, it is desirable that the errors in leakage-rate determination due to the errors in pressure and temperature readings are each always less than 25% of the leakage rate (L), it is shown in the general development in Appendix F that in a 24-hr test at 1-atm overpressure (a = 2) and a test temperature of 530°R the precisions listed in Table 3.4 are required. To obtain precision for other overpressures, multiply the pressure by a/2; for other temperatures, multiply the temperature by T/530; for other desired fractions, multiply the values by 4(f); and for other test times, multiply the values by $\Delta t/24$.

Probable Error. Error analyses of test results have generally followed two basic approaches: (1) correlation of instrument error and (2) analysis of test results on a statistical or quasi-statistical basis.

Table 3.4. Minimum Precision Required in Leakage-Rate Tests

L, Maximum Allowable Fractional Leakage Rate in 24 hr	E, Minimum Precision Required			
	Absolute Method		Reference Method	
	E_p (in. Hg)	E_T (°R)	E_H (in. H_2O)	E_T (°R)
0.05	0.38	3.3	2.6	1.7
0.01	0.075	0.67	0.51	0.33
0.005	0.038	0.33	0.26	0.17
0.001	0.0075	0.067	0.051	0.033
0.0005	0.0038	0.033	0.026	0.017
0.0001	0.00075	0.0067	0.0051	0.0033

Instrument correlation has been accomplished in some instances by direct summation of the individual instrument's limits of precision and in others by application of the second-power error-propagation law. In neither instance of instrument correlation is there a basis for estimating the errors due to inadequate sampling and reading. Statistical or quasi-statistical analyses vary from simple visual inspection of data compared with some mean line to a sophisticated analysis; for example, regression analysis. The reluctance to spend much time and money for analysis when the data appear to be consistent is understandable. However, a statistical analysis of the data may reveal inadequacies in reference volume design or instrument distribution and precision. Robinson of ORNL has discussed some of the problems with reduction of test data and error analysis.[37,58,63] Any attempt to justify statistical methods to estimate leakage rates beyond a reasonable and practical degree of accuracy becomes a moot point when compared with the orders of magnitude of the related factors employed in conjunction with the specified allowable leakage rate in the calculation of concomitant radiological doses associated with fission-product losses from the containment atmosphere.

A not uncommon experience in recording and analyzing leakage-rate data is the obviously spurious result that inleakage is occurring rather than outleakage. A presurvey of the temperature gradients is needed to

assure proper sampling and enable the operator to arrive at valid conclusions as to the location and number of temperature sensors required for the test. Improper sampling is not the only possible cause of calculating or observing inleakage. Other potential causes are leakage from compressed-gas or liquid systems within the containment, possible outgassing from porous internal structures, or leakage from the reference system.

As pointed out in Section 3.5 of this report, consistent, mathematically sound error analyses have not been made for all leakage tests in such a way as to determine the absolute accuracy of the test. Guidance from the literature is offered,[64] but there are several formulas available and no clear indication of which is the best. One approach would be to expand proposed standard ANS 7.60 to cover error analyses and supply such guidance as can be synthesized from the best literature.

Error analyses, in one form or another, always form a basic part of engineering measurements and should receive proper emphasis in planning and interpreting leakage-rate tests. In general terms, a complete error analysis should include the following features:

1. All measurement errors for instruments and test conditions should be separately identified and a quantity given to each from good judgment and best available sources, such as calculations from physics data tables, vendor certification after extensive testing with traceable standards, etc.

2. "Accuracy" factors or factors that allow error to be reduced due to the additional accuracies obtained by multiple measurements and data handling by least-squares fit should be generated by using accepted error analysis techniques.

3. Errors should be combined by using one form or another of the error-propagation law. This has been the area most heavily covered in the literature.

An analysis of this type will aid in providing reliable information on required instrument accuracy and therefore will aid considerably in instrument selection and place proper emphasis on the necessity, in some cases, of multiple instrumentation and special data-handling techniques to improve accuracy. A typical error analysis flow diagram is shown in Fig. 3.4.

ORNL DWG 68-8744

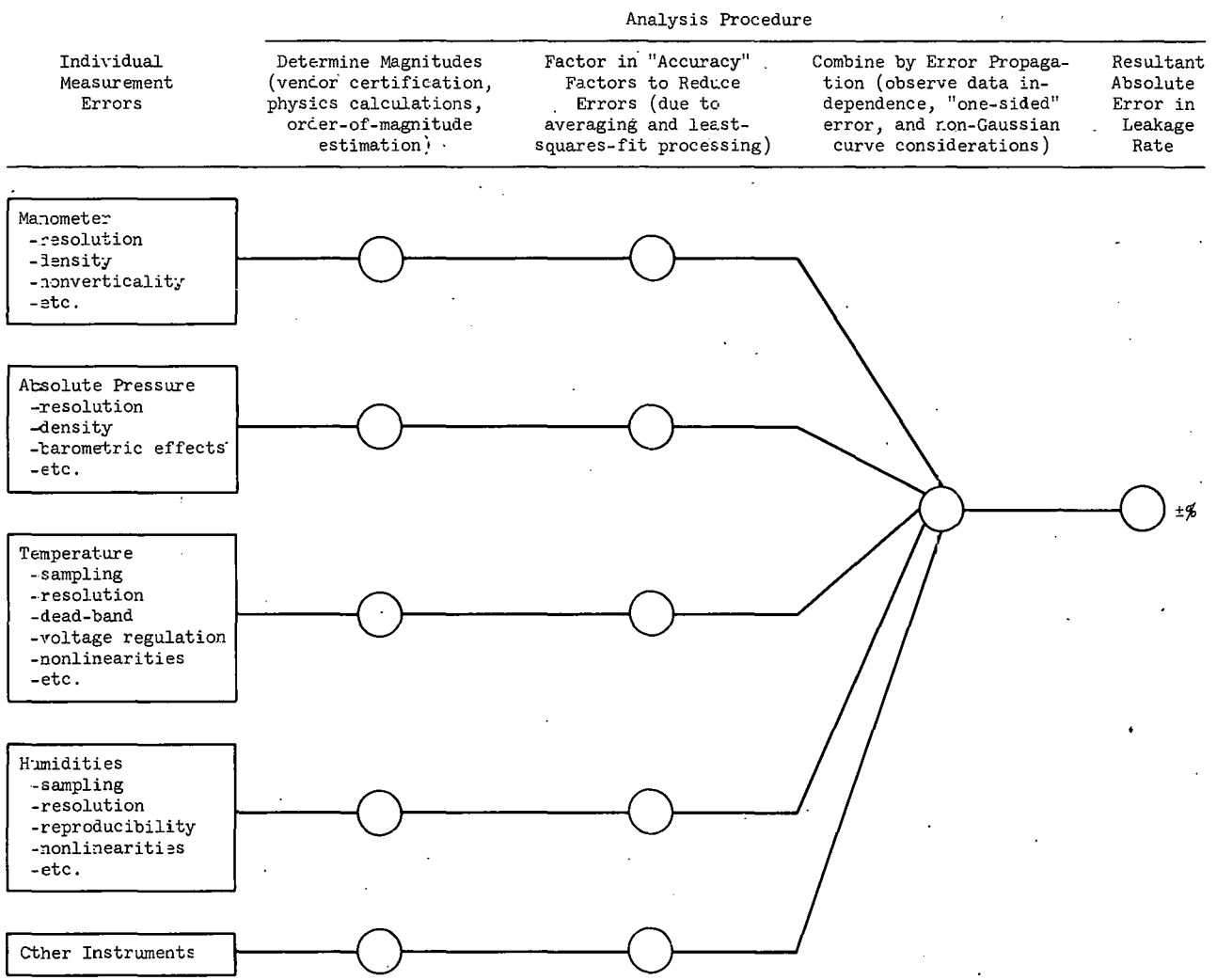

Fig. 3.4. Error Analysis Flow Diagram.

Based on good error control in running a leakage-rate test, the following steps have generally been used in computing the leakage rate in typical tests (see leakage-rate computation flow charts, Figs. 3.5 and 3.6):

1. Multiple measurements are weight averaged, and justification for the weighting factors is provided; for example, five temperature sensors in five separate cubicles are weighted by proportional cubicle volume.

2. Least-squares analyses are performed on the data. This technique can only be applied when the data are known to be linear with time or can be assumed to be linear for a short time. In leakage-rate tests this generally means that a least-squares fit can usually be applied for a few hours of temperature, humidity, or manometer points before and after the data times. More sophisticated regression analyses, which are similar but follow nonlinearities in the data better, can be used for longer times and greater accuracy.

3. Leakage rates are then computed from the processed data.

4. Corrections are computed and factored into the result.

5. A classical error analysis is performed on the entire test unit, including corrections. The basic features of such an analysis are given above.

As is well known, absolute instrument accuracies are not a requirement when parameter changes are utilized rather than absolute quantities. The remaining types of errors, although similar, are much more significant. Some of these, such as scale resolution and instrument dead band, are easily identified and measured. Others, such as instrument nonlinearities and containment sampling, are not. In most cases it will be important to check instrument calibration by recent comparison with a standard that can be traced to a national standard. In some cases, this may not be necessary if absolute linearity is known and only parameter change is significant.

Sampling errors are difficult to determine accurately. While it is possible to study the problem with detailed calculations, it is usually sufficient to make an order-of-magnitude estimate of the maximum conceivable error from this source. Some help can be obtained by looking at the mixing-time constant of the test, which is calculated from the amount of air circulation provided, as aided, perhaps, by natural diffusion. If the

ORNL DWG 68-8745

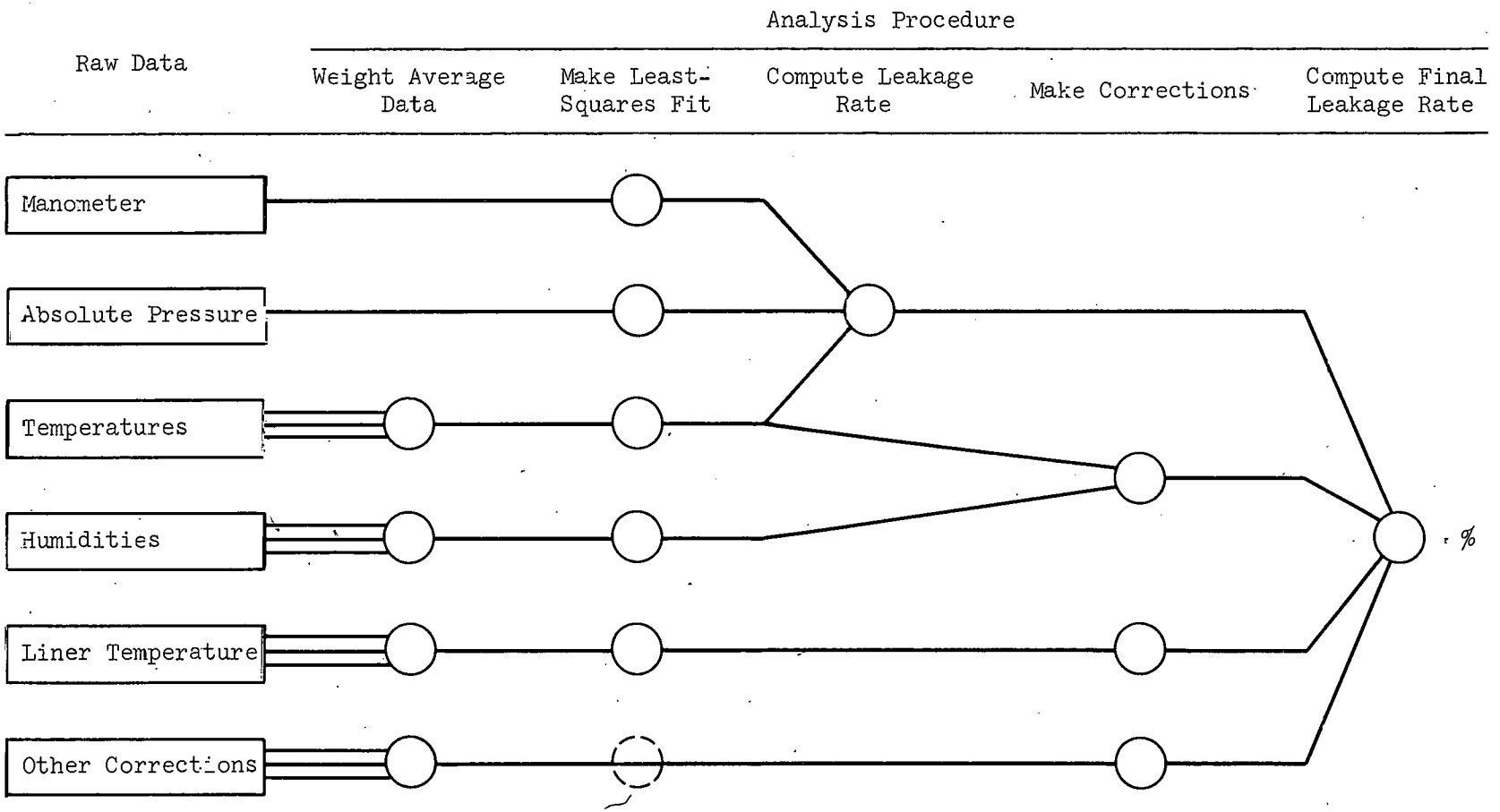

Fig. 3.5. Leakage-Rate Computation Flow Chart.

ORNL DWG 68-8746

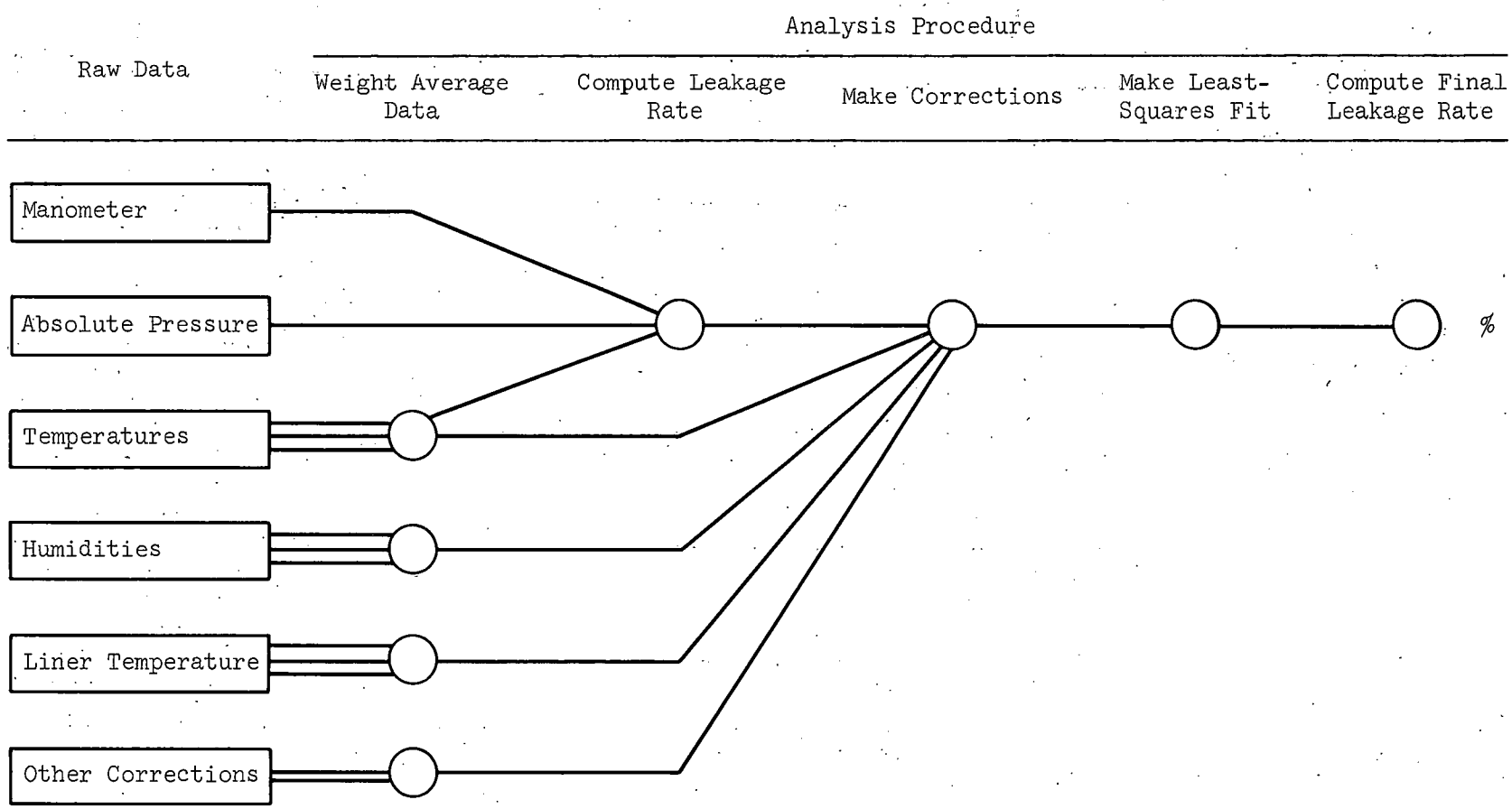

Fig. 3.6. Alternate Leakage-Rate Computation Flow Chart.

containment temperature change for a time equal to the mixing-time constant is determined, the sampling error can be found by order-of-magnitude mathematics to be a small fraction of this change. This has the added benefit of demonstrating how stable conditions must be within the containment vessel when taking measurements in order for a proper test to be run.

With respect to types of instruments, no general agreement has yet been reached on the best types. For temperature, resistance detectors, thermocouples, and thermistors are used. Linearity and reference junction stability problems can make thermistors and thermocouples less accurate than resistance detectors. For humidity, sophisticated dew-point instruments are most accurate but may have large sampling errors if cost precludes the use of more than one instrument. Psychrometers and various electric sensing devices are more adaptable to a multiple measurement system, but special precautions must be taken with each because of inherent problems of foreign material and poisoning which, if present, void the calibration. In any case, humidity measurements can be highly nonlinear, and it is usually required that recent calibration be performed with standard vapor-pressure liquid solutions available at little cost. Inclined manometers and barometric-type mercury pressure sensors are the instruments usually used for pressure measurements. When great accuracy is required, more sophisticated forms of these instruments (i.e., micromanometers, servomanometers, etc.) are employed.

A note on corrections must be mentioned; that is, it is difficult to instrument properly to ascertain the need for some corrections. Such is the case for containment thermal expansion, reference system leakage, air ingrainment in concrete and entrainment in canal water, and reference chamber temperature lag. As pointed out in Ref. 1 and confirmed by observations of typical plants, these corrections can be large and can void the test results. For instance, a temperature change of 10°F in a 2,000,000-ft^3 containment vessel can change the internal volume by about 700 ft^3. (The magnitude of the volume corrections due to temperature and temperature changes is given in App. F.) It is mandatory therefore that some consideration be given to corrections; for example, by some control of test conditions followed by a calculation proving that this control was

sufficient to make the correction negligible or the error in determining the correction negligible.

3.2.3 Bare-Vessel Leakage-Rate Tests

Bare-vessel leakage-rate testing usually refers to the testing performed immediately after the initial strength test. These tests are performed before all penetrations and other auxiliary equipment are installed in the vessel. The tests are usually conducted at design- or maximum-accident pressure conditions and are primarily to show that the vessel fabricator has fulfilled his contractual obligations. As experience is gained, it may be possible to defer such tests and combine them with preoperational tests, particularly since leakage-rate tests without penetrations are not particularly meaningful.

The primary value of the bare-vessel test is that faults or leaks that may later be hidden are easily detected and repaired. As can be seen in Table 3.2, the calculated leakage rates based on these test results have usually been below the required rate. The minimum time required for testing has been 24 hr, and many tests have taken three to four days, with some substantially exceeding this time.

An article prepared by McGrath and Zick of Chicago Bridge & Iron[65] describes the testing procedures used by this firm to conduct leakage-rate tests, discusses single and dual reference system results, and presents test results for seven reactor containment vessels they have built. They conclude that no leaks have been found in radiographed or magnafluxed weld seams and that most leaks have occurred in mechanical closures at penetrations. The article states that a leakage-free reference system is mandatory and that leakage less than 0.1% of the total contained air in 24 hr at design pressure can be measured with reasonable accuracy. Chicago Bridge & Iron has developed a reference system equipment instrument package and techniques that are considered to be proprietary. They normally perform the bare-vessel leakage-rate test and then remove all reference vessels and their equipment package.

Second-generation PWR and BWR plants have containment structure designs that incorporate thick concrete barriers. This should result in more uniform temperature conditions during leakage-rate tests. Under

these conditions, the minimum 24-hr testing period may be an excessive requirement.

3.2.4 Preoperational Tests

Preoperational leakage-rate tests, as the name implies, are conducted just prior to reactor operation with all penetrations and auxiliary equipment installed. Table 3.2 shows the preoperational test pressures, allowable leakage rates, and measured leakage rates for most of the existing power plants. The tabulated allowable leakage rates at maximum accident conditions are those stated in the latest technical specifications, which are part of the operating license issued to each reactor operator. Consistent terminology has not been used for all plant allowable leakage rates.

The AEC Technical Safety Guide specifies that preoperational tests be performed at the design- or maximum-accident condition pressure and at a lower pressure or pressures that may be used for future retesting and/or monitoring tests. Either the absolute or reference method may be used.

3.2.5 Periodic Retesting

Because of the importance of containment integrity in reducing the hazards associated with a nuclear power plant and because of the possibility of deterioration of seals in the containment system over long periods of time, it is necessary that periodic inspection and retesting be performed to insure that containment integrity is being maintained. It is generally agreed that retests for strength are not required unless additions or modifications to the vessel are made.

The retesting schedule for each reactor plant is based on demonstrated performance capability and not on a rigorous and uniform arbitrary schedule for all containment vessels. The AEC Technical Safety Guide (Appendix B) provides that schedules for retesting be set up according to an expanding interval such that successful retesting in the "as-is" condition is given credit by expanding the time interval to the next required test. Such a retesting scheme gives considerable emphasis in the right direction; improvement of actual performance capability is rewarded by reduction of the number of tests required. This effects savings in both time and money.

Section 17, "Periodic Inspection and Testing," of the USA standard for steel containment structures (N6.2-1965) contains provisions regarding periodic inspection and retests.

A full-pressure strength or integrated leakage-rate test of a containment vessel containing a completed plant is rather difficult and dangerous to perform. Much of the shell surface is inaccessible, so it cannot be properly inspected after a pressure test, and in many cases, some instrumentation and equipment installed within the containment vessel of a completed plant might be damaged if subjected to high pressures. All containment structures are now required to demonstrate initially their ability to withstand the maximum calculated accident pressure. Such tests may also be required during the containment service life if modifications or revised conditions dictate the need to reverify the leaktightness.

The principal reasons for permitting reduced-pressure tests are (1) a reduction of the pneumatic testing hazard, (2) the avoidance of metal fatigue effects of multiple testing at higher test pressures, and (3) a reduction of the time and cost for pressurization and depressurization of the containment structure. One problem encountered in conducting such reduced-pressure tests is the selection of a test pressure level from which prediction of leakage at peak pressure is supported by experience. After retesting the vessel leakage rate at reduced pressure, the leakage rate determined must be extrapolated to an equivalent leakage rate at design or maximum accident pressure, as discussed in Section 3.2.1.2.

An additional limiting factor in retesting the vessel leakage rate at reduced pressure is the time required to conduct such a test. To obtain sufficient accuracy, such tests often have to run over a period of one or two days or more, during which time access to the vessel for operation or for maintenance work is not permitted. For a commercially operating power plant, this loss of time could impose a substantial economic penalty.

Both the absolute method and the reference-vessel method can be used for reduced-pressure tests without modification, except that the testing period may be longer to provide adequate sensitivity, and more temperature-measuring instruments or reference vessels might be required (compared with

initial bare-vessel testing) to give adequate temperature compensation and/or indication.

Some other methods may be more attractive for retesting than the absolute or reference-vessel methods because of the pressure and accessibility limitations. In particular, the method of checking individual penetrations has several advantages. This method allows these penetrations to be tested at full design pressure without pressurizing the entire containment vessel. A high degree of accuracy can be achieved with this method if all sources of leakage are known. This method can be used to test leakage of these penetrations at any time without interrupting operation or maintenance of the plant and can even be used for continuous monitoring.

Table 3.5 lists the retest pressures, allowable leakage rates, and measured leakage rates for some existing reactor plants. Retesting schedules have varied from 12 to 24 months and, as previously mentioned, each plant retesting schedule is reviewed with DRL and established on an individual basis. Retesting pressure and frequency of testing are still areas of considerable controversy, and there appear to be no absolute rules that can be applied. The technical specifications of older reactor plants (which usually have shorter retesting periods) are being reviewed in the light of recently issued AEC criteria and regulations.

The retest pressures and schedule for new reactor plants have not yet been established, since it is not necessary to do so before commencing operation, and operators are thus able to defer fixing retest requirements pending development of additional knowledge and experience in the field of integrated leakage-rate testing. Provisions are made in the plant design for testing at full design pressure; however, the actual test pressure and schedule are not established until the technical specifications are prepared.

Another aspect of retesting of containment integrated leakage rates that has not yet been defined is the question of what the retest requirements for prestressed-concrete containment vessels will be. A related issue is the question of what retesting of prestressing tendons, anchors, etc., will be required for these vessels. These and similar questions

Table 3.5. Periodic Integrated Leakage-Rate Tests of Existing Containment Structures

Reactor	Maximum Accident Conditions		Retest Pressure (psig)	L_t, Allowable Retest Leakage Rate[a]	L_o, Allowable Operational Leakage Rate[b]	Range of Leakage Rates Being Measured (%)	Controlled Leak Required	Effective Date	Status	Test Method	Required Retest Schedule
	Pressure (psig)	Leakage Rate (vol %/24 hr)									
Big Rock Point	20	0.5[c]	10	0.121 at 10 psig[d]	Not defined	0.021–0.077	Yes	9/66	Technical specifications	Reference	24 months unless L_t exceeds limit; if so, 12 months
CVTR	19	0.5	13	0.5 at 21 psig[d]	Not defined	0.006–0.086	No	8/66	Technical specifications	Reference	Once prior to January 1967, augmented by continuous 2-psig test
Dresden 1	29.5	0.5	20	0.294	Not defined	0.088–0.184 (±1.4%)	Yes	12/61	Technical specifications	Reference	
Elk River	21	0.1	11	0.14	0.106[a]	0.039–0.09	Yes	3/67	Tentative	Reference	12, 24, and 36 months;[e] also all tentative information and the entire question of testing, including pressure, frequency, and equipment, are currently being reviewed
Humboldt Bay[f]											
Periodic											
Drywell	36	10	10	2.5	1.25[c]	0.04–0.36	Yes	Current	Tentative	Reference	12, 36, and 60 months; thereafter[e] one-year intervals until AEC approves change
Suppression chamber	25	10	10	2.5	1.25[c]	0.18–0.61					
Continuous											
Drywell	36	10	0.72		0.29[c]	0.05–0.02	No	5/65	Tentative	Absolute and makeup	Continuous[g]
Suppression chamber	25	10	0.36		0.14[c]	0.03–0.05					
Indian Point No. 1	24.2	1.0[c]	25 and 1–2	1.0[c]	0.1[a]	0.012	Yes	1/5/66	Technical specifications	Reference	12, 24, and 48 months at 25 psig;[d] thereafter continuous at 1 to 2 psig[g]
Oyster Creek	33	0.5	15	0.5							
Pathfinder	78	0.2	50 78	0.11 0.14	0.08[a] 0.11[a]	0.04–0.08 at 78 psig	Yes	12/65	Technical specifications	Reference	12, 24, and 24 months thereafter[e]
San Onofre	46.4	0.5	23.2	0.26	0.20[a]	0.055	(h)	3/67	Technical specifications	Reference	24, 26, 39, and 39 months thereafter[e]
Shippingport	59	0.15	10	0.065	Not defined	<0.065	Yes	5/65	Technical specifications	Reference	At each seed refueling of core 2; about 24 months
Yankee	34.5	0.1	23	0.7	0.5[a]		No	Current	Tentative		48 months; 12 and 25 months if L_t exceeds limit
			1.5	Not defined		0.007–0.012	Yes	Current	Tentative	Absolute	Continuous[g]

[a] Leakage rates given in units of % of free air volume per 24 hr; tests performed with air at ambient temperature.

[b] $L_o = L_t\ (L_{mn}/L_m)$, where L_{mn} is the averaged continuous leak rate prior to the last Class A test and L_m is the measured leak rate of the last Class A test.

[c] Weight percent of contained atmosphere per day.

[d] Corrected to test pressure by $L_t = L_e[(P_t^2 - 1)/(P_e^2 - 1)]\ (\mu_e/\mu_t)$, where L_t = leakage rate at test pressure, L_e = leakage rate at extrapolated pressure, P_e = test pressure in atm abs, P_e = extrapolated pressure in atm abs, μ_e = viscosity of air-steam mixture at test conditions, μ_t = viscosity of air at test conditions.

[e] Restart at most frequent interval if L_t too high.

[f] Humboldt Bay proposed operational leakage-rate requirements are higher than the initial containment design specifications.

[g] Continuous leakage-rate checking is employed.

[h] Pump-back of air into containment structure through calibrated meter to verify the measuring technique.

are being faced by industry and the AEC in connection with the licensing of plants such as Brookwood, Turkey Point, and Palisades. In view of the extensive use of prestressed structures being proposed, the answers to these questions will have an important effect on the nuclear power industry. The industry is faced with a difficult task in view of the limited experience with prestressed-concrete structures in the U.S. to date.

3.2.6 Continuous Integrated Leakage-Rate Testing

A continuous integrated leakage-rate monitoring system can be used to measure the leakage of a containment structure during periods when containment leaktightness is essential. The system operates by maintaining the containment structure under a pressurized (or vacuum) condition with relation to ambient atmospheric conditions and includes provisions and instrumentation for continuous or periodic determination of the leakage rate of the structure.

Systems of this type are very desirable because they enable a reactor plant operator to keep a check on the continuing integrity of the containment system rather than having to rely on a periodic checkup, before which the system might have been operating with a hatch inadvertently left open, for example. However, leakage-rate results obtained for these low-pressure systems must be extrapolated to the test pressure conditions indicated in the plant technical specifications, and the method of extrapolation must be verified by periodic leakage-rate tests at the higher test pressure. Because of the difficulties of scaling the leakage rate with pressure, this method may not give a true measure of the leakage rate at design or accident pressure; however, it does provide an excellent check to assure that all openings are closed and that some minimum degree of containment integrity is being maintained.

Systems of this type are discussed in the AEC Technical Safety Guide (App. B) which sets the desirable average containment operating pressure at not less than 10% of the retest (P_t) pressure, which is normally set at a minimum of 50% of the design pressure (P_p). The 10% value appears to have been arbitrarily set and has not gained general acceptance in the industry.

Existing reactor plants that are now using continuous low-pressure leakage-rate monitoring systems are Yankee, Humboldt Bay, Indian Point No. 1, and CVTR. The operators of these plants are enthusiastic about this method of monitoring containment integrity. The operators of Dresden 2, which is a new BWR, are considering using a low-pressure continuous-monitoring system,[66] as are the operators of Connecticut Yankee at Haddam Neck, a new PWR.

A method similar to the makeup-air method is used at the Yankee Nuclear Power Station, both as a check on periodic reference-vessel testing and for continuous monitoring of the leakage rate during plant operation. During operation, a nominal internal containment pressure of 1 psig is maintained. Leakage from the containment area is determined by recharging to the initial system pressure with a measured amount of air. Recharging is done at intervals not exceeding 60 days and the containment pressure is recorded every other hour. Pressure, temperature, and humidity are recorded daily. Yankee reports[46] that a gross leak can be detected in less than a day, and very small leaks can be detected within a month. This provides a semicontinuous verification of vapor-container integrity that would be impractical if reliance were placed on periodic high-pressure tests. Leakage rates as low as 0.01% in 24 hr are said to be detectable and measurable within a month and larger leaks in a much shorter time. This system has been very useful in detecting leakage from faulty gaskets and other types of improper closure. In order to satisfy the intent of the AEC Technical Safety Guide, which, as mentioned above, specifies that the continuous test pressure must be 10% of the retest pressure, Yankee has now increased the continuous internal pressure from 1 to 1.5 psig.

Humboldt Bay has a dual pump-back system to provide a measure of containment integrity. In this plant, the drywell and suppression chamber are pressurized to 0.72 and 0.36 psig, respectively. Periodically the drywell and suppression chamber are repressurized, the amount of air charge is measured, and an apparent leakage rate is determined for each vessel (see Table 3.5 for measured leakage rates reported for Humboldt Bay).

The CVTR In-Plant Testing Program includes an evaluation of continuous leakage-rate testing methods; however, recent programmatic changes

may limit this phase of the work. Continuous leakage-rate tests are conducted at the CVTR during reactor operation. Leakage rate is measured by the reference-vessel method at an overpressure of approximately 2 psig. Measured quantities of makeup air maintain the 2-psig overpressure and provide an additional check on the leakage rate. Specific details of this phase of the CVTR test program are included in Appendix G of this report.

A negative-pressure continuous leakage-rate testing system is to be used at the Surry Station of the Virginia Electric Power Company.[67] Reference-volume types of pressure-determination systems are to be used that have an accuracy to determine less than 0.1% leakage in 24 hr at 10 ± 0.5 psia. The Molten Salt Reactor Experiment at ORNL is another example of a plant with a negative-pressure (−2 psig) continuous monitoring system.[68]

3.2.7 Conventional Building Tests

Structures similar to conventional buildings are used for reactor containment if a reactor accident would not produce a substantial pressure rise and a high degree of leaktightness is not required. Structures of this type are often operated at reduced pressure, and leakage from the building is prevented by maintaining a ventilation-system flow rate sufficient to produce a slightly negative pressure within the building so that all leakage is inward. The ventilation exhaust is usually directed up a stack, with provision for filtering. For buildings operated in this way, it may be that the only leaktightness requirement is that the specified reduced pressure be maintained with a given ventilation blower capacity. In this case, a leakage test would consist only of measuring the differential pressure of the building with a water manometer while the ventilation system was operating.

If a maximum leakage rate is specified for the building, in addition to a reduced pressure, a leakage-rate test can be performed by measuring the flow rates of the ventilation system intake and exhaust with conventional gas flowmeters. The leakage rate is then the difference between these two flow rates. This is a convenient and simple means of determining the leakage rate with reasonable accuracy, since all leakage is channeled in one flow path.

Leakage rates of conventional buildings are usually large enough — from 100% per day to 100% per hour or more — to be measured in this way without special techniques or long test periods. If special provisions are taken to minimize leakage, such as using special doors, joints, seals, coatings, etc., leakage rates as low as a few percent per day may be achievable.[69,70] In this case, it may be necessary to use more sensitive devices to measure the leakage rate. However, if the building is to be operated at reduced pressure, the same general procedure of measuring the ventilation system flow rate is usually used. If the building is designed for a slight positive pressure and a maximum allowable leakage rate is specified, one of the pressure-decay leakage-rate testing methods can be used.

3.2.8 Multiple-Barrier Containment Tests

An example of the multiple-barrier containment concept is the Malibu plant proposed by the Los Angeles Department of Water and Power.[7] Two steel membranes with porous popcorn concrete between them form an airtight space, which is maintained as a negative-pressure zone. The negative-pressure zone is continued throughout the floor of the containment vessel, and all penetrations are interconnected to the same zone. A pump-back subsystem is provided to maintain the negative-pressure zone and capture any outleakage through the inner membrane or inleakage through the outer membrane. Three 10-cfm pump-back compressors discharge to the space inside the containment structure. All compressors are located outside the containment structure where they are accessible for maintenance.

After the inner and outer steel membranes and the popcorn-concrete fill have been completed the space between the membranes is charged with a Freon gas—air mixture at 2 psig. All membrane welds are then traced with a halogen gas leakage detector, and all defects are repaired and rechecked. The outer reinforced-concrete wall is then poured, and the strength test is performed.

A two-step leakage-rate test is then conducted. The inner membrane is tested with the popcorn-concrete zone vented to the atmosphere and the containment system pressurized. The reference vessel method is used for

both tests, which must show independent leakage rates less than 0.1% by volume in 24 hr at 15 psig. As a check, the internal pressure is restored to its original value when the original temperature is reestablished, and the air required to do so is measured by a positive-displacement gas meter.

During normal plant operation the containment system integrity depends on the reliable operation of the compressors and the leaktightness of the pump-back subsystem itself. A leak-detection system, consisting of two air meters and a remote-reading absolute-pressure measuring device, is used to measure the amount of leakage through the membranes into the negative-pressure zone. Three air meters are so located that it is possible to determine which membrane is leaking. Leakage through the inner membrane is located by pressurizing the annulus with a Freon gas—air mixture and tracing the inside surfaces with a halogen gas leak detector. Leakage through the outer membrane presents a more complex problem, since the membrane is covered on the annulus side by popcorn concrete and the other by reinforced concrete. The method chosen is to install 1/4-in.-OD copper tubing adjacent to the membrane wall in contact with the popcorn concrete. All the tubes are installed vertically, spaced on 10-ft centers, and brought together at the top of the containment structure into a header. Within each vertical channel the tubes terminate at elevation intervals of 10 ft so that the open lower ends of all tubes are spaced 10 ft apart horizontally and vertically. To locate a leak the annulus is purged of air by introducing inert gas at the top of the vessel and exhausting at the bottom with the pump-back compressors. A slight negative pressure is maintained and each of the tubes is uncapped and connected to a small vacuum pump and oxygen analyzer. By locating the tube with the highest oxygen content the leak can be located within an area 10 ft square. Once the leak is located it is necessary to chip away the reinforced 50-in.-thick concrete wall, locate the exact leakage site, and effect repairs. Over 17 miles of copper tubing is required for this system.

An attempt should be made to develop a simpler and more effective method of leak location.

3.3 Leakage Surveillance Testing

This section discusses leakage surveillance testing in the broadest sense, including a brief discussion of local leak testing experience and techniques, as well as the various methods of testing for leakage where leakage is most likely to occur at containment penetrations. Testing of isolation valves is also covered in this section.

3.3.1 Local Leak Testing

Local leak tests are performed to detect and locate leaks in the containment vessel shell, penetrations, or other containment components so that they may be repaired. A number of local leakage-testing techniques are listed in Tables 3.6 and 3.7. Local leak tests may be performed in conjunction with an integrated leakage-rate test of the entire containment system or by pressurizing a component such as a penetration, air lock, or isolation valve. These local tests, although often very sensitive, have been used principally as a qualitative indication of leakage. Usually, no attempt has been made to measure the rate of leakage out of the leaks detected, and since the tests are usually performed over a limited area, there is no positive assurance that all leaks have been detected. However, some success has been achieved with correlating the total of individual local leakage rates with the results of an integrated leakage test.

Local leak tests can be performed on various containment components before they are installed in the vessel, as well as on individual components after the vessel has been completed. Information concerning the approximate sensitivity of various local testing techniques, with rather ideal test conditions assumed, is included in Table 3.6. The soap-bubble test is by far the most generally used method of local leak testing. Specific information on each method shown in Table 3.6 is discussed in Chapter 10 of Ref. 1.

Additional information on local leak-testing procedures is included as Appendix A of ANS 7.60, Proposed Standard for Leakage-Rate Testing of Containment Structures for Nuclear Reactors (Appendix C of the report). The applicability of local leakage testing is discussed, as well as water

Table 3.6. Order of Magnitude Sensitivity of Various Local Leak-Testing Techniques[a]

Technique	Typical Flow Detectable Under Specified Conditions (ft^3/day)	Basis of Indicated Value
Bubble-observation tests		
Soap-bubble test	10	Observation of 2-in.-diam bubbles forming in 4 sec
Water-submersion test	0.01	Observation of 1/16-in.-diam bubbles at one per second
Vacuum test	0.1	10-ft^3 chamber; 1/2-hr test; constant temperature; pressure readable to 0.1 mm Hg
Sonic tests	15	
Adulterant gas tests		
Air-ammonia test with HCl solution or phenolpthalein indicator	1	Ammonia concentration of 10^{-3} parts by volume
Halogen gas sniffer test	10^{-3}	Instrument sensitivity of 1×10^{-6} cc/sec; halogen concentration on pressurized side of 10^{-2} parts by volume; all leakage ducted to instrument with no external dilution
Helium mass-spectrometer test	10^{-6}	Mass-spectrometer sensitivity of 5×10^{-8} cc/sec; pure helium on pressurized side; all leakage ducted to the spectrometer with no external dilution
Radioactive gas test	10	10-ft^3 chamber; 330 μc ^{85}Kr (1 mr/hr at 1 ft, unshielded)
Olfactory test	1	Average human sensitivity to mercaptan = 4×10^{-8} parts by volume; local test mercaptan concentration of 10^{-3} parts by volume

[a]From Ref. 1.

Table 3.7. Leak-Testing Methods and Order of Magnitude Sensitivity[a]

Method	Minimum Detectable Leakage (torr·liters/sec)
Air test	1
Hydrostatic test	5×10^{-1}
Isotope test	7×10^{-2}
Fluorescence test	1×10^{-2}
Immersion test	1×10^{-2}
Soap-bubble test	1×10^{-3}
Chemical test	8×10^{-4}
Halogen sniffer test	$\sim 10^{-6}$
Helium sniffer test	$\sim 10^{-8}$
Mass-spectrometer envelope test	$\sim 10^{-10}$

[a]From Ref. 71.

submersion, vacuum, air-ammonia, halogen sniffer, and ultrasonic leak detector tests. A listing and descriptions of 19 leak-detection methods and their approximate sensitivities are presented in a report by Cadwell.[72]

Based on discussions with reactor plant operators, it is concluded that local leak testing will continue to be used as a method of locating leaks for repair that have been detected by pressure-decay tests. It is considered unlikely that the technique of summing local leak-test results to obtain an estimate of integrated containment leakage will ever be applied to any appreciable extent.

3.3.2 Penetration Testing

Since it is generally accepted that penetrations through the containment structure are the most likely location for leaks, there has been increasing attention given to developing means of testing penetrations to increase the operator's assurance that allowable integrated leakage rates will not be exceeded. This work has included development of techniques for monitoring the leakage from groups of penetrations, as well as from individual penetrations. The importance accorded these tests is evidenced by the requirements for their frequent performance found in most reactor

plant technical specifications, as well as in Part III of the AEC Technical Safety Guide (App. B). The frequent performance of penetration tests has a compensating effect of allowing less frequent performance of the more difficult and time-consuming integrated leakage-rate tests. The Technical Safety Guide requires that penetrations be tested twice between integrated leakage-rate tests and at least once per year.

Penetration testing may be conducted periodically or continuously, and both methods are being used. The determination of the method to be used is a complex and somewhat arbitrary process, since the other reactor plant safety features must be considered, as well as the particular leak-tightness assurance desired for the plant. In many reactor plants, no specific provision is made in the penetration designs for penetration testing. In other plants, this aspect of the plant design has been given much emphasis. An example of an extreme case is Consolidated Edison's Indian Point No. 2 Plant, where all penetrations can be continuously leakage tested at full design pressure. In addition, provision has even been made in this plant for continuous leakage testing of the containment liner weld seams at full design pressure. Similar systems are being contemplated for other new PWR plants, although the method of utilizing the system may be limited to partial initial testing or possibly periodic testing.

The virtue of enclosing penetrations with small, monitored, pressurized volumes is that 1 ft^3 of leakage out of a 10-ft^3 volume is much more readily measured than 1000 ft^3 out of a 2,000,000-ft^3 volume. The integrated leakage of all parts should be checked against the criterion governing the leakage from the whole.

In discussing penetrations, it is important to recognize that there are a number of different types of penetrations that vary in their individual probability of leaking. Penetrations can be broken down into the following categories, which are listed in the order of decreasing tendency to cause leakage:

1. personnel access and equipment hatches or air locks,
2. electrical and other penetrations that utilize gaskets, sealing compounds, or other seals subject to possible deterioration with time,

3. hot pipe penetrations that must accommodate pipe thermal expansion,
4. cold pipe penetrations.

Penetration-testing provisions for a number of representative reactor plants are listed in Table 3.8, and each of the above penetration categories is discussed briefly below. It should be borne in mind that penetration design is currently of great interest to reactor plant designers, operators, and regulatory agencies, and this discussion of current practice in the field may be outdated within a few months. For this reason, possible directions of change are also briefly mentioned in the discussion.

1. Personnel Access and Equipment Hatches or Air Locks. Personnel access and equipment hatches not provided with air locks are usually provided with double gaskets to allow pressurizing between the gaskets in order to check leaktightness, usually at full accident pressure. Actually this type of test evaluates the leaktightness of only one of the two gaskets in the proper direction, but this deficiency is considered minor. Such a test can be performed either periodically or continuously, depending on a specific design or the needs of the operator.

Personnel access or equipment air locks can be leak tested by pressurizing the air-lock space between the two doors and either monitoring pressure decay or using local leak-testing techniques. If the air lock is used during operation, such a test could obviously not be easily performed continuously. For this reason, and for general testing convenience, some air locks are being designed and operated with double gasketing to allow leak testing as described above.

The design of a hatch or air lock should be such that pressure loading of the entire component, as in an accident, would not tend to adversely affect its sealing capability. If this is not the case, pressurizing between pairs of gaskets would not be a meaningful test. If these conditions can be met, it is concluded that this method of testing major containment access openings can be considered to be accepted practice. The only remaining issue will be to establish the frequency of periodic testing or the potential need for continuous testing interrupted only by access requirements for specific plants.

Table 3.8. Containment Engineered Safety Features and Penetration Testing Requirements for New Plants

Key to numbers in column listed at foot of column

Reactor	Containment Spray System	Air-Recirculation and -Cooling System	Other Containment Heat-Removal Systems	Isolation Valves	Personnel and Equipment Hatches	Electrical Penetrations	Hot Pipe Penetrations	Cold Pipe Penetrations
Browns Ferry	1, 2, 3	Not used as engineered safety feature	Pressure-suppression-pool cooling system has provisions for flow and valve operability tests	1, 2 (reactor system valves)	1, 2 (personnel lock)	1	1	None
Connecticut Yankee (Haddam Neck)	1; system is interconnected with a normally operating residual-heat-removal system	1	Not available	No information	1 and 3 (equipment hatch); 2 (personnel lock)	1, 2, 3	2	None
Dresden 2 and 3	1, 2, 3	Not used as engineered safety feature	Full-flow recirculation testing	1, 2 (reactor system valves)	1, 2 (personnel lock)	1	3	None
Indian Point No. 2	1, 2	1	Not available	3	1, 3, 4	1, 2, 3, 4	2, 3, 4	1, 2, 3
Oconee	1, 2, 3	1	Not available	No information	1, 2 (personnel lock)	1	None (no bellows)	None
Turkey Point 3 and 4	1	1	Not available	No information	1, 2 (personnel lock)	1	None (no bellows)	None
	Key: 1. Recirculation line provided for periodic pump operation and flow test 2. Provisions made for periodic air-flow testing of valves and nozzles 3. Provisions made for cycling valves dry	Key: 1. Fan motors designed to operate at accident conditions; periodic tests consist of fan motor start-stop cycles		Key: 1. Single tap between valves for pressure-decay tests 2. Double tap — one downstream of second valve for hydro test of fluid collection 3. Seal water system attached to lines	Key: 1. Double-gasketed seals with pressure taps 2. Double door or hatch with provision for air-testing cavity 3. Weld test channels 4. Continuous pressurization system	Key: 1. Test tap for air-testing penetration cavity 2. Double-gasketed seals with pressure tap 3. Weld test channels 4. Continuous pressurization system	Key: 1. External channel surrounding bellows 2. Weld test channels 3. Internal sealed cavity with test penetrations for air-testing bellows and welds 4. Continuous pressurization system	Key: 1. Weld-test channel 2. Internal sealed cavity with test penetration 3. Continuous pressurization system

2. Electrical Penetrations. Most designs of electrical penetrations (and a few pipe penetrations in some plants) specify sealing compounds and/or gaskets that are possibly subject to deterioration with time in a reactor plant environment. Although in many early reactor plant designs such penetrations were not made to be tested for leaks, it is considered general practice today to do so (see Table 3.8). This is found to be the case even in plants in which provisions for testing other penetrations have not been made. Examples of typical electrical penetrations that can be tested for leaks are shown in Fig. 3.7 (Ref. 50). A number of other typical electrical penetration designs are shown in Chapter 9 of Ref. 1. Electrical penetrations that can be tested have become standardized to the point that manufacturers are offering standard electrical-penetration prefabricated components.* It is anticipated that this trend will continue and possibly extend to other types of penetration.

3. Hot-Pipe Penetrations. Hot-pipe penetrations include those through which hot water and steam pass into and out of the containment system. In many cases these penetrations incorporate a bellows or some other means to accommodate pipe movement as a result of thermal expansion. Current practice relative to the provisions made in the design of these hot-pipe penetrations is not uniform. In some plants, such as Consolidated Edison's Indian Point No. 2, hot-pipe penetrations cannot only be tested, but they can be tested continuously at full design pressure, as shown in Fig. 3.7. In other plants, such as Dresden 2 and 3, these penetrations can be tested for leaks but only when the reactor plant is shut down and the operator has access to the inside of the penetration in the drywell so that a temporary test seal can be installed. This type of penetration is shown in Fig. 3.8 (Ref. 73). Similarly, the Turkey Point hot-pipe penetrations do not have builtin provisions for leak testing independently of the containment system. It is emphasized that such differences in provisions made for testing of penetrations result from the use of different containment design concepts (pressure containment and pressure-suppression containment), as well as differences in siting, reactor operator performance,

---

*General Electric Company, San Jose, California, and Crouse-Hinds Company, Syracuse, New York.

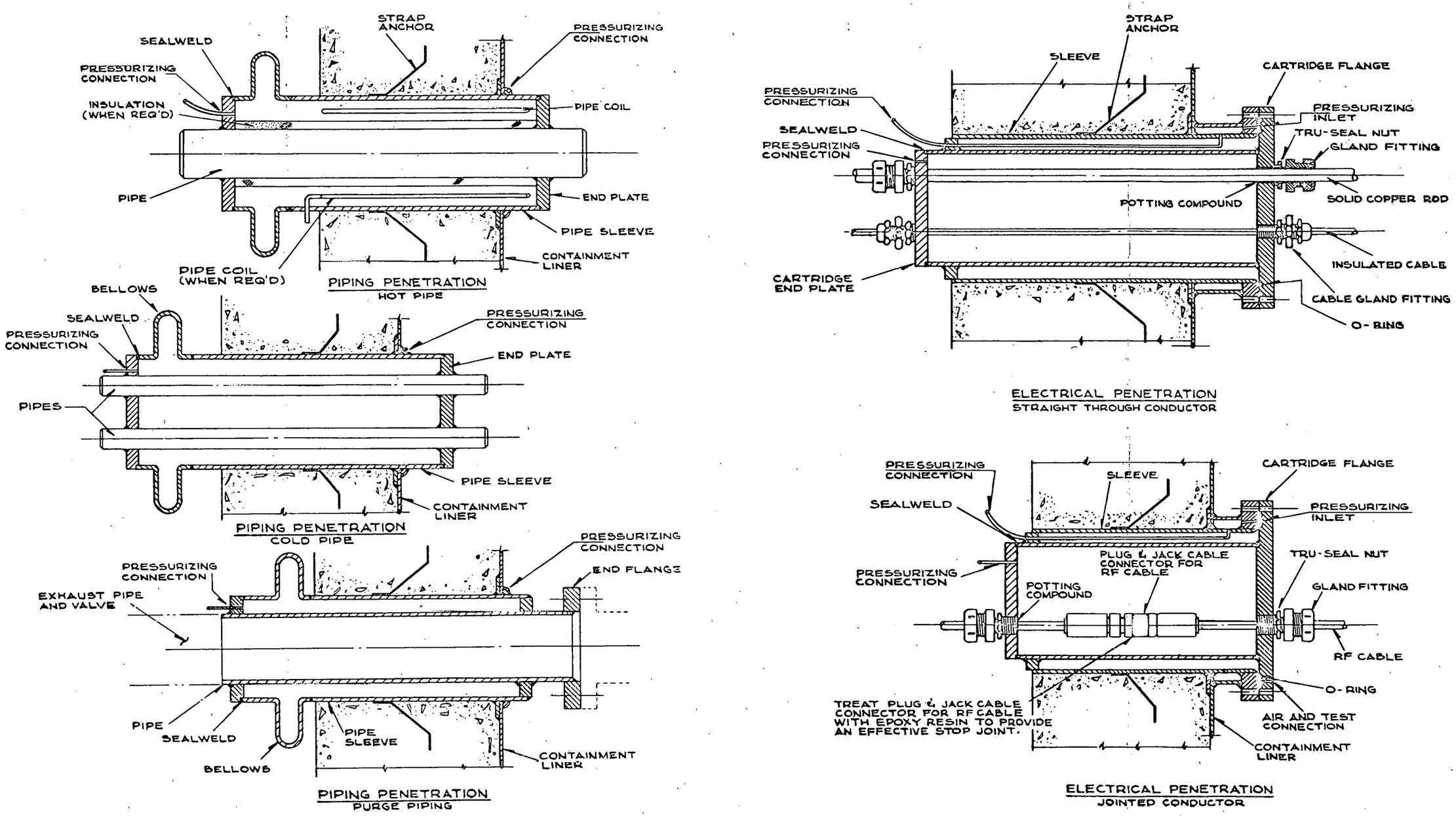

Fig. 3.7. Typical Containment Penetrations. (From Ref. 50)

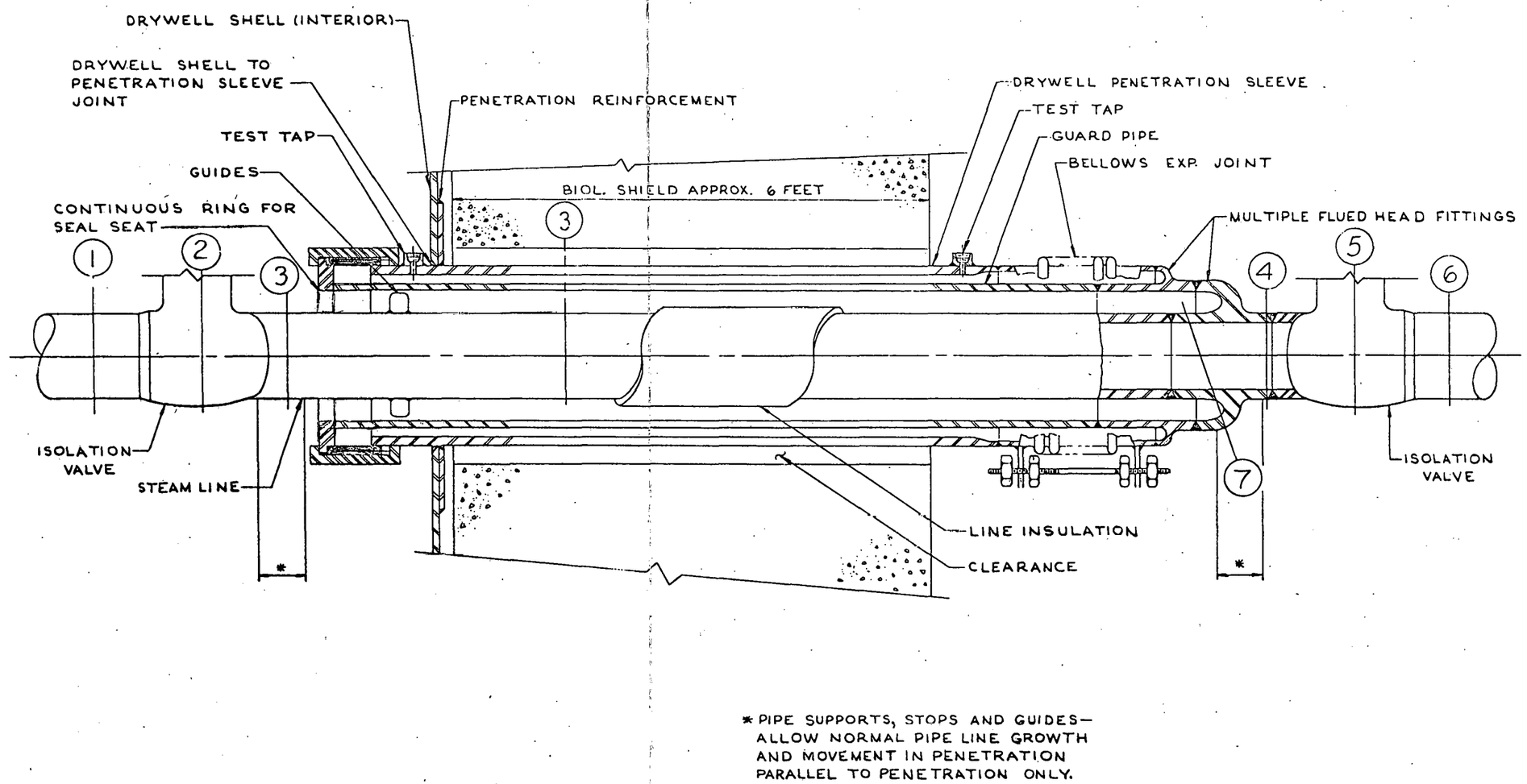

Fig. 3.8. Typical BWR Steam Line Penetration. (From Ref. 73)

reactor plant designer philosophy, and AEC demands. Despite these differences, it is probable that a more standardized approach to the design of provisions for testing hot-pipe penetrations will be developed in the future.

4. Cold-Pipe Penetrations. Cold-pipe penetrations are those through which cold water or air pass through the containment barrier. In most cases no specific provisions for leak testing of these penetrations are made in containment designs. Only in the most extreme cases, where even the containment weld seams are tested, is consideration being given to either continuous or periodic testing of cold-pipe penetrations. If proper attention is given to the design, fabrication, and quality control of such penetrations, it appears that, except in very rare instances, leak testing of such penetrations will not be required.

3.3.3 Weld-Seam Testing

In some recent PWR plant designs, channels have been welded over seams in the reactor containment vessel liner to allow leak testing of the seams. The particular methods of utilizing these weld-seam testing channels vary from plant to plant, and a consistent pattern has not yet developed. For some plants, notably Consolidated Edison's Indian Point No. 2 plant, the reactor operator has been committed in negotiations with the Atomic Energy Commission to continuously test the weld seams at full design pressure. In other plants, such as Turkey Point, the weld seams will be tested initially by using the channel, but integrated leakage-rate testing will be relied upon to detect any subsequent leakage. In utilizing weld-seam leak-testing channels it should be recognized that the operator is testing not only the weld that forms part of the containment barrier but also two additional welds required to seal the testing channel around the weld seam. It is considered that if leakage did occur it would have at least as high a probability of occurring through these channel welds as through the containment liner welds. As a result, the reactor operator might be led by an indication of a weld-seam leak to shut down the reactor plant and break out concrete in order to find the indicated leak, only to discover that the leak was in the testing system itself and not in the liner weld seam being tested. It appears that a more realistic approach would

be to combine stringent quality control of the liner weld seam with continuous and/or periodic leak testing of the containment in lieu of continuous high-pressure testing of weld seams with installed test channels.

3.3.4 Isolation-Valve Testing

The openings in containment structures caused by piping penetrations must be controlled in order to avoid violation of containment integrity and thus nullify the intensive work done on penetration and containment design and testing. Although some of these openings are normally closed, many must remain open or be opened occasionally if the reactor is to operate and produce power. These openings are often separated from both the reactor coolant system and the containment atmosphere by at least one solid metallic barrier, such as a heat exchanger shell or tube walls that also must fail if radioactive material is to be released to the piping penetration. Because of these factors, normally opened or occasionally opened piping penetrations are allowed, provided they are equipped with the appropriate isolation valves. The number and types of isolation valves used, the leaktightness specified, and the closure speeds required depend upon the amount and type of radioactive material potentially available to the fluid being transmitted, the time dependency of this source entering the fluid, the transport characteristics of the fluid, the degree of containment of the fluid and its contained radioactive material in any secondary confinement system, and the consequence of failure of or leakage through an isolation valve under accident conditions.

Because of the different radioactive material sources and fluid transfer characteristics associated with each type of reactor plant design, the isolation-valve requirements must be evaluated for each specific application. However, although exceptions do exist, the following criteria, discussed in Chapter 9 of Ref. 1, represent the practice that has usually been followed with respect to the number and location of isolation valves used in piping that penetrates the containment boundary in a water-cooled reactor plant. The following criteria are not necessarily representative of current practice for all plants.

1. Lines that are normally closed need only a single isolation valve. A lock or seal or interlock should be provided if this valve is remotely actuated to prevent it from being opened during reactor operation or during otherwise potentially hazardous situations. Even though normally closed, lines routinely containing very highly radioactive fluids or which are open to the containment system are often equipped with multiple valves to guard against accidental opening and to provide greater assurance of leaktightness.

2. Lines that connect to the primary coolant system and are normally open or occasionally open are usually provided with two isolation valves. For incoming lines (e.g., lines for makeup, feedwater, emergency cooling, control rod cooling), one or both may be a check valve. The valves should be located so that one is inside and one outside the containment barrier. At least one should close automatically to prevent flow reversal. For outgoing lines (main steam lines in direct-cycle plants and lines for purification system and emergency cooling), one valve is also usually placed on each side of the containment wall. At least one of these valves should close automatically upon receipt of a signal indicating a system failure. On the Humboldt Bay plant, two tandem isolation valves are located on the main steam line just outside the drywell, but a guard pipe extends the drywell barrier to the first valve and thereby in effect makes one valve body part of the wall and one valve external to the wall.

3. Lines that are open to the containment system (e.g., lines in ventilation and purging systems and containment spray systems) are normally provided with two valves in series. At least one should close automatically upon indication of a system failure. Ventilation system valves, which may be somewhat less positive in closing because of their greater dimensions, often are both automatically closed at the same time. (This discussion also applies to purge-line valves that are normally closed during reactor operation.)

Ventilation system valves have been a source of potential containment leakage in many existing plants, such as Shippingport[74] and Elk River.[24] It is extremely difficult to maintain leaktightness in such large valves that require periodic actuation. Partly as a result of this experience, open ventilation systems are not being used in any new plants.

Instead closed air recirculation and cooling systems that utilize cooling water which passes through the containment barrier are being used, and normally closed purge-line ducts are included to allow purging of the containment system prior to an extended shutdown, such as for refueling.

4. For lines that connect closed-loop systems in the containment system, no generalizations are possible. Since by definition these penetrations are separated from the containment atmosphere and the primary system by a continuous barrier, such as the pipe wall, heat-exchanger tubing or casing, pump wall, etc., the need for further protection provided by an isolation valve is dependent on the vulnerability of the interior barrier to failure, the direction of flow likely upon failure, and the radioactive material transport likely upon failure.

The following discussion abstrated from Amendment 2 of the Dresden Nuclear Power Station Unit 2, Plant Design and Analysis Report,[33] gives an example of application of the above criteria:

> "The test capabilities which will be incorporated in the primary containment system to permit leakage detection testing of containment isolation valves are separated into two categories.
>
> "The first category consisting of those pipelines which open into the containment and do not terminate in closed loops outside the containment will contain two isolation valves in series. Test taps are provided between the two valves which permit leakage monitoring of the first valve when the containment is pressurized. The test tap can also be used to pressurize between the two valves to permit leakage testing of both valves simultaneously. The valves, associated components, and equipment which will be subjected to containment pressures during the periodic leakage tests will be designed to withstand containment design pressure without failure or loss of functional performance. The functional performance of these devices will be verified by demonstration either during a leakage test or subsequent to the test but prior to the startup.
>
> "The second category consisting of those pipelines which connect to the reactor system will also contain two isolation valves in series. A leak-off line is provided between the two valves, and a drain line is provided downstream of the outboard valve. This arrangement permits monitoring of leakage on the inboard and outboard valves during reactor system hydrostatic tests which can be conducted at pressures up to a reactor system operating pressure of 1000 psig."

3.3.5 Testing of Isolation Valves in Main Steam Lines

An attempt was made to obtain copies of operational and periodic in-service valve-testing procedures for new large reactor plants, but these were not available, since they are not required until the later stages of reactor licensing. Performance requirements and production and manufacturer's shop test procedures have, however, been prepared for isolation valves for BWR main steam lines. These tests are performed to demonstrate the ability of the Wye-type globe valves to meet the requirements of purchase orders and specifications supplied by the purchaser. Both multiple springs and a hydraulic piston are used to provide closure in a specified time. Brief descriptions of the tests follow:

1. Production Tests. Each valve is given performance tests prior to release from the vendor's shop. A hydrostatic test is performed at 2450 psig (per USA B16.5 code) with cold water to verify integrity of the valve body, and then further cold-water tests are run at 1250 psig. In the tests at 1250 psig the stem backseat leakage is not to exceed 2 cc of water per hour per inch of backseat diameter, the seat leakage is not to exceed 2 cc per hour per inch of seat diameter, and the packing is checked with the valve stem not backseated to determine that there is no visible leakage. Closing tests are then performed at 1000 psig with dry nitrogen. The valve is closed and the closing time is recorded for operation by the spring only and by the spring and the air cylinder (3 sec maximum). Finally, the seat leakage rate is measured with air at 50 psig.

2. Manufacturer's Shop Test. Tests are performed on the first valve of a series of valves of a particular model with steam at 1000 psig and 545°F, with no flow. In these tests the packing is checked to determine that there is no visible leakage. The valve is closed and the closing time is recorded for operation by the spring only and by the spring and the air cylinder. The valves are required to close in 3 sec. In a stroke cycling test, the valve is opened and closed a minimum of three times to check for smooth operation. The valve is then disassembled and inspected for wear and damage.

The preceding tests are essentially static test-stand acceptance tests, which do not dynamically test the valves with flowing steam at the

maximum full flow rates that could be experienced during a design-basis accident. Design of the isolation valves and steam line will permit valve testing during conditions typical of those during an accident. In large plants, such as Browns Ferry, four main steam lines are installed between the reactor vessel and the turbine that will permit full-closure testing of one steam line isolation valve during plant operation with full steam flow. Plants with fewer steam lines are limited to fractional steam flow limits for such valve tests. The valves can be actuated and stroked (partially closed) upon signal from the control room during normal plant operation to check for proper operation. Valve closure integrity can be checked during reactor shutdown by closing both isolation valves and pressurizing the pipe volume between valves with high-pressure gas to evaluate the leakage rate.

The preceding statements regarding in-service testing of isolation valves indicate what could be done; however, no specific detailed procedures have been prepared as of this time. It appears that in some reactor plants such full-flow tests cannot readily be made during normal reactor operation; therefore it is suggested that a simulated dynamic test be designed to expose these important valves to steam conditions expected during a design-basis accident. There may be a possibility of utilizing an old steam plant that has ample capacity to provide the required steam conditions.

3.3.6 Seal Water Systems for Isolation Valves

In some PWR plant designs, seals are incorporated that maintain a leg of water to assure the effectiveness of certain isolation valves during any condition that requires containment isolation. Such seals are being incorporated in Consolidated Edison's Indian Point Plants Nos. 2 (Ref. 34) and 3 (Ref. 50), as well as as in the Malibu Plant[7] of the Los Angeles Department of Water and Power.

The seal water system functions after a loss-of-coolant accident to establish a water leg between the potential source of radioactivity in the containment vessel and the closed isolation valve or closed piping system outside the containment barrier. The system provides a means for injecting water between seats and stem packing of globe and double-disk

types of isolation valves and into the piping between closed-diaphragm valves. The water leg is established by using bottled-gas pressurization so that the motive force for the water seal does not depend on electrical power. The following description of the system is adapted from the Indian Point No. 3 PSAR.[50] Figure 3.9 shows this system.

System operation (i.e., automatic seal water injection) is initiated by the containment isolation signal. When actuated, the seal water system interposes water inside the penetrating line between two isolation points located outside the containment barrier. The water is introduced at a pressure slightly higher than the containment vessel design pressure. The high-pressure nitrogen supply used to maintain pressure in the seal water tank does not require any external power source to maintain the required driving pressure. The possibility of leakage from the containment or reactor coolant systems past the first isolation point is thus prevented by assuring that if leakage does exist, it will be from the seal water system into the containment system.

Isolation and seal water injection are accomplished automatically for certain penetrating lines requiring early isolation, and manually for others, depending on the status of the system being isolated and the potential for leakage in each case.

Reliable operation is based on periodic testing of containment isolation valves and the seal water system. Each automatic isolation valve can be tested for operability at times when the line is not required for normal service. Lines that supply automatic seal water injection can be similarly tested. The isolation valve seal water system has to date been used only on those reactor plants that have had very stringent leakage requirements by virtue of their metropolitan area location.

3.4 Industrial Meeting on Containment Testing

A meeting to discuss containment vessel testing was held in Chicago in 1964. Many reactor owners, operators, and architect-engineering firm representatives were in attendance.[75] Various leakage-rate testing procedures were described and discussed and the following conclusions were reached, the majority of which are still valid today:

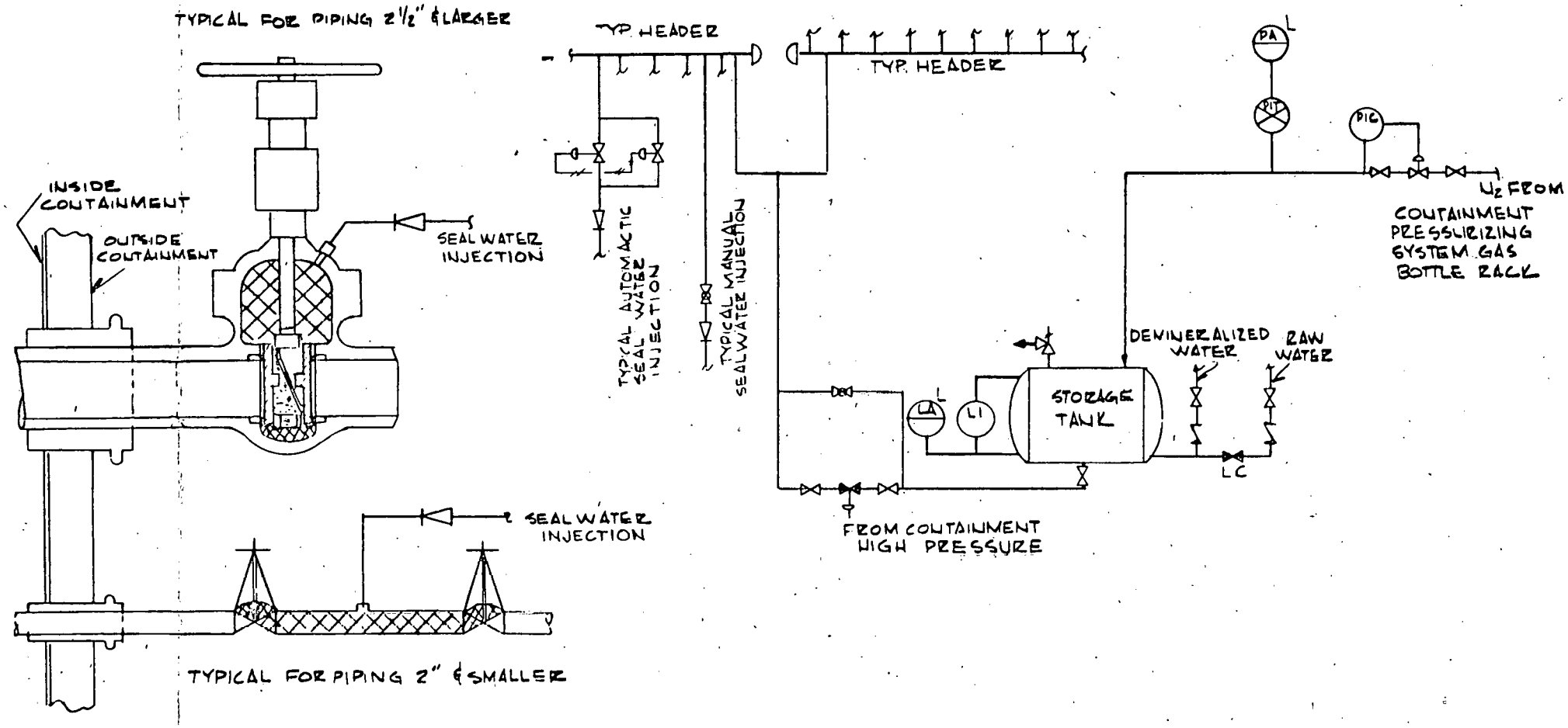

Fig. 3.9. Seal Water System for Indian Point No. 3 Isolation Valves. (From Ref. 50)

1. Pressure testing for strength as required by the ASME Boiler and Pressure Vessel Code, Section III, and in accordance with USA Standard N6.2-1965 does not impose any particular hardship on owners.

2. Integrated leakage-rate testing is the most difficult subject on which to reach agreement. Good results have been obtained by both the absolute and the reference-vessel methods of testing. The proposed standard ANS 7.60 provides a good guide. The intervals at which integrated leakage-rate tests should be performed and the pressures at which they should be carried out in order to have significance are matters on which there is wide divergence of opinion. These widely varied opinions exist not only between the owners and the AEC representatives but also among the various owner's representatives.

3. Continuous integrated leakage-rate testing in closed containment systems at low pressures is being carried out successfully in several installations. [This is being done at the Yankee Plant (+1 psig) and also at the MSRE (−2 psig) facility.] This testing should provide good surveillance of the containment vessel and its penetrations without requiring expensive outages at frequent intervals for costly test procedures.

4. Penetration designs that provide for local testing without interrupting the operation of the plant are desirable. Development of design details should be carried out as rapidly as possible.

5. In most cases, full- or partial-pressure integrated leakage-rate tests after the plant has been operating should be carried out occasionally but not as frequently as proposed by some AEC representatives. High-pressure integrated leakage-rate tests of containment vessels present a hazard.

6. Experience to date with integrated leakage-rate and local component testing indicates that the major problem areas are in penetrations that contain equipment subject to frequent mechanical operation, such as air locks and isolation valves.

7. The consensus was that each plant has individual and distinct characteristics due to its siting and design and that these differences make it necessary for each owner to use his own best judgment to maintain the design principles of his plant in his dealings with the AEC.

8. In considering containment vessel leakage, careful thought must be given to the path the leakage will follow to reach the atmosphere at

ground level. Leakage that will be vented through the stack should be discounted in comparison with leakage to the atmosphere. The effect of atmospheric leakage should be fully covered in the final hazards summary report and recognized in preparing the test procedures.

9. Design leakage-rate specifications have generally been based on leakage rates that can be attained by the containment vessel fabricators. With many reactors, the hazards analyses show that the hazard to the public following a design-basis accident based on the design containment leakage rate is several orders of magnitude below the criteria set forth in 10 CFR 100 (25-rem whole-body exposure and 300-rem thyroid exposure). It is important to recognize this point in establishing the maximum allowable containment leakage-rate specification for use during the operation of the plant.

10. Even though considerable differences of opinion on the details of containment testing were expressed by the owners' representatives, recognition of the need for concerted action was evident. The use of the Nuclear Task Force as a focal point for this united action was agreed upon, and it was further agreed that serious efforts would be made to bring the various code and standards committees into full use. The Nuclear Task Force was to serve as a clearing house through which owners' representatives could keep each other informed about their dealings with the AEC and its representatives.

Although this meeting was held in 1964, the conclusions and positions still reflect the consensus of the majority of reactor owners, operators, and architect-engineers. However, AEC's Division of Reactor Licensing does not concur with all these conclusions. For example, DRL's own evaluation of exposure dose rate based on leakage rate may differ significantly from those of the applicant (see also Sect. 1.4), and therefore apparent overconservatism of leakage rates, as stated in item 9 above, may not actually exist.

Other points discussed were the lack of specific information on expected and permissible margins of error in containment testing and the problem of precision, as reflected by experimental errors of the same order as the specified allowable leakage rates. Specific testing procedures

used for Pathfinder, Yankee, Indian Point, Dresden 1, Saxton, PRDC-Fermi, CVTR, and ESADA-VSR were reported.

3.5 Review of Containment Leakage-Rate Test Reports and Guidelines for Leakage-Rate Testing

A limited review of existing leakage-rate test reports resulted in the following conclusions. First, the errors involved in the current techniques for leakage-rate testing are of such significance that the accuracy of the results cannot be independently verified nor can a finite mathematical confidence be derived. It appears that leakage rates can be two to three times the reported values. Secondly, the majority of the errors are the result of inadequate precision of the test equipment used, inadequate test equipment calibration, and (more significantly) poorly designed sampling techniques.

There appears to be little advantage to be gained from the further analysis of past test data. The major need is for guidelines to correctly define the leakage-rate tests so that the accuracy and significance of the result can be predicted before the tests are run. The most critical areas are those involving improved temperature and humidity sampling techniques so that the energy level changes (which invariably result from both external ambient variations and/or internal system heat losses) can be distinguished from the containment atmospheric mass reduction due to leakage. Also, guidelines are needed for the selection and calibration of test equipment commensurate with the accuracy required for a particular containment system and the desired length of the test. With such guidelines, it should be possible for a utility or other reactor plant operator to conduct a leakage-rate test with such accuracy and precision that the data could be independently analyzed and the result verified, including the tolerance intervals and associated confidence levels.

The guidelines would not specify how a test was to be conducted; rather they would serve to point out the possible ways, along with the advantages, the problems, and the pitfalls of each method. The absolute method would be rigorously compared with the reference-vessel method for typical applications, and the better method from the standpoint of improved

precision would be identified. A tentative outline for the suggested guidelines is given in Table 3.9. Although more than one leakage-rate measuring technique has often been used simultaneously, common measuring instruments were usually employed. Even when common instruments are not used, the nominal leakage rates can be significantly different and offer very little improvement in the statistical confidence of the result. Thus there is no statistically justifiable basis on which to assess the absolute confidence level of the current leak-testing programs.

It appears that the actual leakage rates are probably not greater than two to three times the reported values, at most, and in most cases this might be regarded as still providing adequate overall protection from leakage under accident conditions. However, the inability to verify the test results and establish a finite confidence level could negate the test results if the possibility of a single gross error existed. It is with these considerations in mind that the proposed guidelines are recommended.

A limited review of various integrated leakage-rate testing reports served to highlight several areas where there appears to be a general need for further consideration in order to ascertain the accuracy of the results. These areas and general examples are cited below. Specific, yet typical, examples from a few of the reports that indicate either the lack of information or lack of consideration of important parameters affecting accuracy are presented below.

The instruments used are very scantily described in most reports. For example, a thermocouple "accuracy" is listed as 0.1°F. It is not clear whether this is an indication of absolute or relative (repeatability) accuracy, sensitivity, resolution, etc., or whether this is a standard deviation or other measure of degree of that accuracy. The response time, effect of air velocity, effect of humidity, etc., are not discussed. It is not stated whether the accuracy applies to the thermocouple or the entire measurement system or whether and how it was verified. Other areas that are generally disregarded include the probability and effect of instrument reading errors, instrument failure during the test, calculational error, etc. The final figure for leakage rate is even subject to question because it typically includes a plus or minus tolerance of equivalent

Table 3.9. Tentative Outline of Guidelines for Reactor Plant Containment Leakage-Rate Testing

I. INTRODUCTION
- A. Background
- B. Overall Test Accuracy Requirements
- C. Error Propagation
  - 1. Absolute Systems
  - 2. Reference Systems
  - 3. Total Test Errors
- D. Selection of Methods
- E. Constant and/or Integrated Pressures
- F. Problems To Be Anticipated

II. PRESSURE MEASUREMENTS
- A. Accuracy Requirements
  - 1. Relationship to Test Duration
  - 2. Relationship to Other Accuracies
- B. Equipment Selection
  - 1. Types of Equipment
  - 2. Redundancy Considerations
- C. Equipment Calibration
  - 1. Parameters To Be Determined
  - 2. Methods for Calibration
  - 3. When to Calibrate
- D. Compensations and Corrections
  - 1. Sensitivity to Other Variables
  - 2. Methods for Compensation

III. TEMPERATURE MEASUREMENTS
- A. Accuracy Requirements
  - 1. Relationship to Test Duration
  - 2. Relationship to Other Accuracies
- B. Sampling Considerations
  - 1. Number and Location of Sample Points
  - 2. Pretest Determinations
  - 3. Sampling Techniques
  - 4. Weighting of Samples
- C. Equipment Selection
  - 1. Types of Equipment
  - 2. Mixing of Types
- D. Equipment Calibration
  - 1. Parameters To Be Determined
  - 2. Methods for Calibration
  - 3. When to Calibrate
- E. Compensation and Corrections
  - 1. Sensitivity to Other Variables
  - 2. Methods for Compensation

IV. HUMIDITY MEASUREMENTS
- A. Accuracy Requirements as Related to Pressure Accuracy
- B. Sampling Considerations
  - 1. Number and Location of Sample Points
  - 2. Sampling Techniques

IV. HUMIDITY MEASUREMENTS (continued)
- C. Equipment Selection
  - 1. Types of Equipment
  - 2. Redundancy Considerations
- D. Equipment Calibration

V. OTHER MEASUREMENTS
- A. Volume Variations
  - 1. How to Estimate Significance
  - 2. Techniques for Measurement
- B. Deviation from Perfect Gas
  - 1. Significance
  - 2. Correction Techniques
- C. Other Variables
  - 1. Makeup Air
  - 2. Inleakage

VI. CONTROL OF TEST VARIABLES
- A. Internal Air Circulation
- B. Humidity Control
- C. Superimposed Leakage Rates
- D. Other

VII. DATA COLLECTION
- A. Frequency
- B. Personnel Errors and Blunders
- C. Methods and Techniques

VIII. DATA EXAMINATION
- A. Statistical Examination
- B. Spurious Data Treatment
- C. Weight Averages
- D. Other Adjustments
  - 1. During Test
  - 2. Posttest

IX. DATA HANDLING AND REDUCTION
- A. Accepted Formulas
- B. Treatment of Errors
- C. Correlation of Variables
- D. Establishment of Statistical Confidence
- E. Methods of Presentation

X. LEAKAGE-RATE ANALYSIS
- A. Accounting for Leakage Variations
- B. Extrapolation of Data

magnitude, which is unusual, and it fails to give any confidence that the actual rate may be assumed to lie within this or any other tolerance range.

Inconsistencies among results for various power plants are evident. Some owners found that containment system changes in net free volume due to thermal growth are significant; others ignore sucn effects. Some correct for reference-system leakage; others ignore the correction after a marginal attempt to determine its magnitude. Speculations on the causes of diurnal or sporadic data scatter range from "unexplained" to unconvincing speculations about effects of ambient temperatures on reference-system tubing. Throughout the analyses, a constant emphasis is placed on "reasonableness" of the data, and data are used that are between large peaks where they are reasonably well behaved and the peaks are ignored. These examples, although some may be arguable or unreal in the more detailed analysis, serve to indicate the need for a standardized data analysis program, or at least for a standard check-off list for use with the existing programs.

One test report points out that when using the reference bulb system, the ambient air temperature at the instrumentation location was 8 to 10°F less than the vapor container temperature. The report indicated that correction was made for the change in liquid volume due to the temperature difference but that "no satisfactory correction has been developed" to compensate for expansion or contraction of the air in the bulb system. Apparently no attempt was made to determine whether the effect of this difference would be significant, either by experimentation or by assumption of the worst possible effects. This report indicates the "instrument accuracy" of the test instruments used but does not discuss the source of verification of the accuracy, the type of accuracy (absolute, repetitive, standard deviation, etc.), or the effect of environmental variables on the accuracy (such as the effect of incident radiation or pressure on a thermometer), even though the test results are sensitive to even slight deterioration of the accuracy indicated.

Another report was the source of the following quotations:

> "The purpose of the initial reference system leakage-rate test had been to provide confidence that the reference system was sufficiently leak-tight to proceed with the building test ... . Upon inspection of Figure _ of Appendix _,

> it can be seen that the results of the test are quite inconclusive and not applicable to the original design intent ... . The probable errors associated with a test of this nature far outweigh any quantitative leakage that might be measured ... . If an accurate quantitative measurement could be made, it would be impossible to know how to apply the correction factor to the primary test, because if the leakage occurs inside the building, the factor would be negative and if the leakage occurred outside the building, the factor would be positive."

In the final analysis, no correction factor for reference system leakage was applied to the result.

There is a lack of uniformity regarding terms such as maximum allowable leakage rate, design leakage rate, design leakage requirements, maximum acceptable leakage rate, etc. These terms are often used when compiling and tabulating data on various reactor plants. Care should be taken to carefully define terms in establishing requirements and reporting results.

Design leakage rates can be confused with test leakage rates, and rates associated with bare-vessel tests can be misinterpreted as rates for final preoperational tests. It is suggested that consistent terminology be adopted for all leakage-rate data, starting with the preliminary safety analysis report. The adoption of consistent terminology would be an aid to all parties concerned in evaluating and comparing leakage-rate test results. If the leakage rate is based on a pneumatic test, it is suggested that the results be reported in the following terms, which are further defined in the AEC Technical Safety Guide (see App. B).

1. Maximum Design-Basis-Accident Leakage Rate (L_a)
   _____ wt % loss of containment atmosphere in 24 hr for the design-basis accident conditions of temperature _____°F, pressure _____ psig and ratio of steam to air _____ (lb steam/lb air).
2. Maximum Allowable Test Leakage Rate (L_p or L_t)
   _____ wt % loss of containment atmosphere (air) in 24 hr at _____ psig and ambient temperature test conditions.
3. Measured Leakage Rate (L_{pm} or L_{tm} or L_m or L_{mm})
   _____ wt % loss (± _____) of air in 24 hr at an average

temperature of ____°F and a pressure of ____ psig as calculated from leakage-test data.

4. Corrected Leakage Rate

_____ wt % loss (± _____) of steam-air mixture in 24 hr at a temperature of ____°F and a pressure of _____ psig with a ratio of steam to air of _____, corresponding to the design basis accident conditions.

Some ambiguity and confusion has resulted when the leakage rate has been specified only as "percent per day." As Brittan[52] has pointed out, this could imply percentage of vessel volume, percentage of total contained air, percentage of air added during pressurization ("stored air"), or percentage of design pressure. If leakage rate is specified on a volume basis, the temperature and pressure must be clearly specified also. It is not clear which basis is more representative of the accident condition. However, in view of the other approximations made in safety analyses, the difference is usually not significant if the basis is understood and clearly stated when specifying the allowable percentage leakage rate and the measured rate is determined on the same basis. In reality, it makes no difference to the radioactive material waiting to get out, since, if 0.1% of the containment contents escape in 24 hr, 0.1% of the radioactive material also escapes. Another factor to keep in mind is that the radioactive materials to be contained may leak differently than air or air-steam mixtures.

3.6 Testing of Engineered Safety Features Associated with Containment Systems

The engineered safety features included in this discussion are those systems whose function it is to remove heat from the containment system to prevent the containment pressure from exceeding the allowable design pressure. These engineered safety systems consist of containment sprays, air-cooling systems, and other means of removing heat from the reactor containment system following a loss-of-coolant accident. Specifically excluded from this discussion, although they certainly would affect the containment pressure indirectly, are core sprays and other engineered

safety features designed to remove heat from the reactor core directly. These systems are discussed in a companion paper.[76] The provisions made for testing containment engineered safety features in typical new reactor plants are summarized above in Table 3.8. Provisions made for testing engineered safety features in operating plants have not been tabulated because of the lack of consistent design or operating practice. Testing requirements being established for new plants do, however, reflect previous experience and can be considered syntheses of current design practice and past operating experience.

Operation of the engineered safety features associated with the containment system is extremely important, since without them operating the pressure in the reactor containment vessel in the event of a loss-of-coolant accident would exceed the design pressure in a relatively short time in almost all plants, particularly those being designed today. A notable exception is the San Onofre Plant, for which it has been calculated that natural transfer of heat from the uninsulated steel reactor containment sphere would be sufficient to maintain the reactor containment pressure within its design value.

The availability and reliability of emergency power supplies to drive the engineered safety features are extremely important to the safe operation of a reactor plant. The design and testing of emergency power supplies has not, however, been included in this discussion and may be the topic of a future discussion paper.

3.6.1 Testing of Air-Recirculation and -Cooling Systems

Many of the currently operating reactor plants have air-ventilation and -cooling systems that utilize air carried into and out of the containment vessel in large ducts. In these plants, such large ducts must be quickly closed with valves in the event of an accident. Since reliability and leaktightness in closure valves is difficult to obtain, essentially all new large power reactor plants are cooled by internally recirculated air. The air-cooling system thus needs only to be supplied with electrical power and cooling water through the containment barrier. The heat-removal capacity of these units is extremely high and has been incorporated as an engineered safety feature in many reactor plant designs. As such, these

air-cooling units must be designed to handle the higher density atmospheric flow that would be encountered in the event of an accident, as well as to operate in the high-pressure high-temperature high-humidity atmosphere that would exist. Particular attention must be paid to the design of the electric motors for the blower fans. Integrated leakage-rate testing of the high-pressure containment system will impose a maximum load on these electric motors, since the density of air at test conditions will be higher than the density of steam-air mixtures that would exist during a design-basis accident.

Motorette units are used for testing the capabilities of features to be incorporated in full-size motors. The motors are designed to withstand accident-environment conditions, and provision is made for adequate heat removal. Periodic tests are conducted during the life of the reactor plant to detect any deterioration of the electrical insulation, and bearing-vibration detectors are used on a continuous monitoring basis. Motor housings are designed to prevent moisture in the containment atmosphere from entering the motor cavity, and independent, small water-cooled heat exchangers are often used to remove excessive motor heat. The normal heat-removal capacity of the heat exchanger units is dictated by operational requirements, which will be higher in the event of an accident because of the higher heat transfer coefficients due to condensation of the steam.

An ideal test of the air-cooling units to be utilized as engineered safety features would consist of a test in an accident environment consisting of a high-pressure high-temperature steam-air mixture. Such a test in a reactor containment vessel is obviously impractical, particularly on a periodic basis. For this reason, indirect evidences of reliability, including design conservatism and periodic stop-start cycling (see Table 3.8), are cited by reactor operators for these units. An important consideration is that these units are normally operating equipment, and therefore there is a high probability that they will be on the line and operating in the event of an accident. The ability of these units to continue to operate in a high-temperature high-pressure steam environment must rely on conservative design. Although a test of a full-size air-cooling unit in a steam environment under laboratory conditions

would be feasible, it is understood that no such tests have been run or are contemplated at the present time. Usually a small section of a full-size air-cooling unit is used as a test model to determine its heat-transfer capability in high-pressure steam-air mixture environments. The units are often made of a series of parallel thin plates with many water-cooled tubes piercing the plates at 90° to produce the effect of a tube bundle with large common fins. A steam-air mixture flows parallel to the plates, and drop-wise condensation occurs on the surface. The water-side film coefficient is the controlling heat-transfer factor.

In view of the importance of these units for protection of the reactor containment system, is it considered that there is a need for design demonstration tests to prove that equipment and related instruments and controls for this system can function as required in a postaccident containment system environment. To be meaningful, the tests must utilize the identical hardware to be installed in the operating reactor plant. Tests of this type are part of a construction project and would best be performed either by the organization responsible for reactor plant design or by an outside laboratory as a service to the design organization. A typical or representative type of system could be designed and tested by an AEC contractor to qualify that particular set of components for use by any plant; however, this approach would have a tendency to restrict design freedom and initiative.

3.6.2 Testing of Containment Spray Systems

Containment spray systems are provided in most water-cooled reactor plants. These systems are designed to reduce reactor containment pressure by transferring heat from the containment atmosphere to the spray water. In some cases chemicals such as sodium thiosulfate have been included in the containment spray water to increase adsorption of iodine by the spray.

An ideal test of a containment spray system would consist of running the spray at full design flow in the containment vessel with the containment system at peak accident pressure. Such a test could not be conveniently performed at any time after the plant was completed, since it would probably result in damage to equipment. For the most part, testing of containment spray systems to date has consisted of operation of the

spray pumps either at full or partial flow and cycling of control valves. Many of these tests have been limited to only jogging of the pumps or partial recirculation of flow in the immediate vicinity of the pump. A more satisfactory test would be a full-flow recirculation test up to the last stop valve before the spray header. Table 3.8 indicates that some provision for recirculation testing of spray systems is being made in all new reactor plants. In many cases, however, full-flow recirculation is not used, and only a portion of the system is tested.

Air or smoke tests of the spray header have been conducted in a number of instances to supplement recirculation tests. Smoke or air tests are not considered to be particularly meaningful, except as an initial check that the system has been properly piped, since periodic passage of air through a pipe does not mean it will continue to be able to accommodate full design water flow. It has been suggested that a preoperational test of the containment spray system, including full flow operation from the spray pumps through the spray header might be conducted inside the containment vessel before equipment was installed. Such a test should be given serious consideration. Care would have to be used in fully drying the system after testing to avoid formation of corrosion products and/or scale.

3.6.3 Other Heat-Removal Systems

Although the containment spray system would remove heat from the containment atmosphere as long as containment spray water of the proper temperature was available, it would eventually become necessary to recirculate water from inside the containment vessel through the spray system, since water could not be added indefinitely. In this case, the heat stored in the pool of water in the containment vessel would be removed by heat exchangers. In some designs, the heat exchangers are incorporated as an integral part of the containment spray system. In this case, the heat-removal system would be tested when the containment spray system was tested. In other designs, separate heat-exchange systems are provided with their own pumps, power supplies, and heat exchangers. Testing of such a system is a straightforward matter of running water through the

systems at rated flow for a period of time, preferably by using normal sumps and flow paths. Some tests of this type are summarized in Table 3.8.

A report prepared for the AEC by Holmes & Narver[77] discusses the reliability of engineered safety features for five operating power reactors — Dresden 1, Yankee, Indian Point No. 1, Humboldt Bay, and Shippingport. Although the report primarily covers the reliability aspects of engineered safety features, a discussion of testing and its relationship to overall safety is included. Containment leakage-rate testing is mentioned, including continuous leak monitoring, and a general discussion of isolation valve and containment spray system operational experience is reported. Emphasis is placed on the importance of emergency power availability.

The report concludes that safety systems are standby systems and that therefore indication of ability to perform must be verified by tests and inspection. Two tables are presented that (1) summarize the operational testing programs for safety feature systems at the five plants and (2) summarize the nature of current safety feature tests, test limitations for purposes of system reliability assessment, and potential areas for development work on standards, design criteria, and testing practices.

Present siting criteria (and related reactor containment leakage rates) are based on 10 CFR 100 (Ref. 4) and the AEC guide for calculating site distance factors.[9] It is recommended that the guide[9] be revised by adding a section covering engineered safety features. Credit has been given for engineered safety features incorporated in existing plants and those presently authorized for construction,[78] and it appears that some type of quantitative credit schedule could be established for specific safety features as a guide for reactor designers.

According to Culver,[79] engineered safety feature factors* as high as 21 have been approved by the AEC. However, it should be pointed out that final approval of a specific reactor plant is not only based on its power and engineered safety features but also on the specific site and atmospheric conditions. Perhaps separate subfactors can be established on

---

*This factor is the ratio of the authorized (or proposed) power level to the power-level limit stated in the AEC guide[9] for actual site distances.

the basis of site characteristics, such as topography and meteorology, and these combined with the factors for specific engineered safety features could establish an apparent reactor siting factor. A separate factor should also be applied to the containment system based on the detail design and operational features of the vessel, its penetrations, and other features. Actual operational experience should also be considered when establishing factors for the above systems. Present reactor plants cannot meet the requirements of the AEC guide[9] without rather large siting distances. This type of information is needed if urban siting is indeed an important economic consideration for future utilization of atomic power.

4. CONTAINMENT SYSTEMS TESTING RESEARCH

Research in reactor containment systems testing is being conducted by AEC contractors in the Containment System Experiment (CSE) at Hanford, the Loss-of-Fluid Test (LOFT), at the National Reactor Testing Station, and the CVTR in-plant testing program for which the Carolinas-Virginia tube reactor is being used. Most of the testing being performed at these facilities is directed at obtaining information that can be used to analyze the consequences of loss-of-coolant and other serious accidents. Only a small portion of the work is directed toward learning how to improve testing of containment systems.

The need for information concerning reactor containment systems has been reviewed by Phillips Petroleum Company in connection with the LOFT program. Their major conclusions are summarized briefly in the following statements. "A frequent assumption in safety assessments is that leakage from the containment following the design-basis accident takes place at a constant rate equal to the maximum specified value. At present, the degree of conservatism of this assumption cannot generally be established. Surveillance leakage-rate tests of complete reactor plant containments are usually performed at reduced pressure, and extrapolation to the design pressure is often made with ostensibly conservative assumptions regarding flow regime, etc." Phillips went on to point out that there is, however, no assurance that the type, number, and size of leaks will be the same at the design pressure. Aside from possible pressure expansion of existing leaks, there may be leakage that appears only above a certain "threshold" pressure. On the other hand, certain types of low-pressure leaks, such as at gaskets, may pressure seal at higher pressures and thus reduce leakage. Therefore information is needed to determine the degree to which reduced-pressure leakage-rate test results can be extrapolated to design pressure. Performance of leakage-rate tests of a containment system at several pressures, including design pressure, will provide information on the effect of pressure on leakage rate. More use is being made of this type of testing.

It has often been assumed that leakage rates for the postaccident environment are the same as for ambient air at design pressure. Differences between postaccident and test atmospheres, however, need to be examined. Following primary system rupture, the containment atmospheric temperature would rise and could also exhibit significant thermal gradients, particularly during blowdown. In addition, heat transferred to the shell would produce elevated temperatures and gradients in the shell and possibly affect leakage paths. Furthermore, the postaccident gas-vapor mixture in the containment system may exhibit significantly different leakage characteristics than air.

It should be noted that this summary of LOFT conclusions concerning information needs does not make reference to need for information concerning containment system testing techniques. The CSE program does, however, include some testing along these lines.

A recent thesis paper[80] describes a series of laboratory tests to study the transport properties of steam-air mixtures for fission products represented by krypton (typical noble gas) and iodine (typical halogen) under design-basis-accident conditions. An attempt was made to validate extrapolation from leakage to accident conditions for purposes of safety analyses. Based on viscous flow theory, the following conclusions were reached:

"1) An increase in the leak path temperature decreases the transport of fission products by decreasing the air flow rate.
2) The concentration of fission products is increased in the air by condensation of the steam during passage through the containment leak.
3) The condensing steam does not plug straight containment leaks greater than 25 microns in diameter over the pressure-temperature range examined in this work.
4) The leaks examined in this work exhibited only viscous flow characteristics.
5) The deposition of iodine in the leaks examined does not significantly affect the transport of this element.
6) The condensing steam transports iodine through the containment vessel leaks. The significance of steam transport in total iodine transport depends on the volume-to-surface ratio of the containment vessel and the size of the steam fraction.

> It is further concluded that leakage predictions for the .... [design-basis accident] are not reliable if they are based on leakage rates determined in normal containment leak tests. The higher the temperature and pressure of ... [the design-basis accident], the greater is the underestimation of leakage based on leak tests at the same pressure. Further, with iodine and the other halogens, variables such as steam transport of the halogen, and variations in concentration due to partial pressure changes during the course of the accident further complicate the leakage of these elements."

4.1 Containment System Experiment

The overall experimental program and facility proposed for the CSE are described in the program document.[81] (The facility is also described in Appendix H of this report.) The CSE program has been continuously revised and updated based on discussions with industry and the AEC, and the program document presents its broad purposes, identifies the specific objectives, and states a philosophy to guide the development of the detailed experiments. Based on recent discussions with facility personnel, the purposes, objectives, and philosophy stated in that document are still considered to be appropriate. The fundamental objective of the leakage-rate testing activities is to relate the leakage rate of fission-product activity after an accident to results of containment vessel leakage-rate tests performed with air at the ambient temperature. In support of this broad objective, the following specific objectives will be pursued during the various tests:

1. measure air leakage rates for the installed vessel
   a. obtain basic data
   b. identify and characterize individual leak points
   c. determine leakage rate as a function of pressure
2. investigate the factors affecting the sensitivity and accuracy of leakage-rate measurements
   a. determine the magnitude of the error that results from inadequate spatial sampling of temperature and humidity as a function of the gradients existing and their changes with time

b. investigate the effect of inherent variation of leakage rate as a function of time on a limiting practical sensitivity of leakage-rate measurement

c. evaluate techniques for determining leakage rate for short periods by means of high-sensitivity differential pressure measurements between the containment vessel and a leakproof reference vessel

3. investigate extrapolation of leakage rate from test conditions to postaccident conditions

a. compare steam-air leakage rates with air leakage rates for the same leak geometries

b. during the aerosol transport test, determine the leakage of different components of test aerosols through representative containment system leaks

Item 2 is of particular interest to reactor operators, since it has the potential of helping them to determine how best to minimize the time required to obtain necessary leak-test accuracy. A more subtle but important result of the CSE program will be a better definition of the extrapolation necessary from the test conditions to postaccident conditions.

The development of the bases for theoretical analysis of leakage-rate test results has been essentially completed and exhaustively treated in AEC and ORNL reviews.[1,61] Similarly, techniques for performing leakage-rate tests with air have been widely discussed, as mentioned in Chapter 3 of this report. The CSE program considers the available information on containment vessel leakage-rate testing as inadequate in the following areas, and the proposed areas of investigation are expected to provide better information.[82,83] Much of the information to be obtained will be directly applicable to the improvement of techniques for performing testing of containment systems.

1. Shorter Leakage-Rate Testing Period. The use of high-sensitivity instrumentation to measure leakage rates in tests of a few minutes or hours duration has been successful in situations where the temperature and humidity were quite stable.[57] This technique needs to be tested under conditions of less stable temperature and humidity to ascertain the limits

or range of application. Shorter test periods would be of direct and immediate financial benefit to reactor operators provided acceptable accuracy could be assured.

2. Methods of Obtaining Required Temperature-Measurement Accuracy. Different methods of obtaining the average containment air temperature have been evaluated simultaneously during leakage-rate tests but only under rather stable temperature conditions and without means for independently determining a volume-averaged temperature for reference. Similarly, air circulation is often used to reduce temperature and humidity gradients during a test, but no information is available as to the relations between the air-circulation rate and the reduction of number of sensors permitted in the monitoring systems. Thus, errors due to inadequate spatial sampling have not been adequately investigated.

3. Leak Studies. The variation in leakage rate at individual leak points representative of those common to containment systems is of interest. Variation with time, pressure, temperature, and contained atmosphere are desired data. Such data should be clearly understood as merely representative of possible situations and not necessarily directly applicable to other leak points of the same type.

4. Determination of Leakage-Rate Measurement Accuracy. Factors such as those discussed in items 2 and 3 lead to consideration of the limits of sensitivity of leakage-rate determinations for practical measurements on large systems. While the scatter of the data during a test is an indication of the sensitivity achieved, small data scatter alone is not sufficient to assure either high sensitivity or accuracy. The ability to measure total leakage independently by summing the individual leaks in the CSE systems permits a direct approach in investigation of limiting sensitivity.

5. Air Leakage Versus Activity Leakage. The allowable fractional air leakage rate for a containment system is often made equal to the allowable fractional rate of activity leakage based on uniform concentration of activity inside containment vessel and no decontamination along the leakage path. It is of general interest to determine the decontamination in several paths representative of those in typical containment systems.

4.2 Loss-of-Fluid Test

The objectives of the LOFT project are to provide information to (1) assist in establishing criteria for the design of plant equipment vital to safety and engineered safety features, (2) assist in determining the relative importance of the phenomena that occur during the accident sequence, (3) establish the reliability of extrapolating results from laboratory and small-scale experiments, and (4) assess the validity of analytical models developed to describe all or portions of the accident. As can be seen from this statement of LOFT objectives, information from this program on testing containment systems will be incidental, since such testing is not a primary objective of the test program. During the early phases of LOFT operations, the LOFT containment system may be leak tested under pressure by using trace quantities of iodine and krypton. Leakage occurring during the integral loss-of-coolant tests will then be compared with the pretest leakage-test results. Similar work will be done at CSE with simulated fission products.

The LOFT facility includes a reactor, pressure vessel, coolant system, and containment and filtering systems. The 70-ft-diam 127-ft-high dry containment building is equipped with pressure-reduction sprays, a remote-decontamination system, a remote fission-product sampling system, a concrete missile shield, and monitored penetrations. Construction of the LOFT facilities is in progress and is currently scheduled for completion in the fall of 1968. Design and construction of system components is still progressing. Detailed program planning and analytical support activities are being conducted. The LOFT program is described in greater detail in Appendix I, which is based on Refs. 84 through 87.

4.3 CVTR In-Plant Testing Program

In the CVTR in-plant testing program, several potential system and component tests are being considered for performance in commercial or AEC-owned water-cooled power reactor facilities. Included in the tests being considered are integral containment leakage tests and penetration leakage tests of both "open" pentrations, such as air locks and ventilation

valves, and "closed" penetrations, such as pipes, nozzles, and cables. In the planned program of in-plant testing proposed for CVTR, the effectiveness and reliability of safety features, including containment spray systems, will be assessed.

The objectives of the in-plant testing program have been described as follows: plan and conduct specialized test programs in AEC-owned and commercial reactors and special AEC facilities, including those designed for high-risk tests; evaluate the performance and reliability of critical systems and processes and accumulate data on the testing of these items; evaluate the effects of accident phenomena and the effectiveness of various safety features designed to reduce accident consequences; and develop the requirements, procedures, and specifications for periodic testing and inspection of engineered safety systems to insure their performance and reliability.

In the above statements of objectives it can be seen that information is being developed on containment systems testing that should be useful to reactor operators. Informal approval has been given by the AEC to proceed with test plans for the CVTR program.

Phase I of the CVTR in-plant testing program, which is the preliminary testing program and is essentially completed, is divided into the following basic tasks:

1. CVTR existing data review (Holmes & Narver, Inc.),
2. continuous low-pressure leakage-rate tests,
3. CVTR containment contaminants measurements.

Phase II, which is the primary testing program and will be conducted after reactor shutdown, will include the following:

1. integrated leakage-rate tests,
2. penetration leakage-rate tests,
3. containment design-basis-accident tests.

The phase I and phase II tests are described in detail in Appendix G, which is based on Refs. 39, 40, 88–91. The basic objectives of the three phase II tasks are, by conducting elaborate leakage-rate tests and using specialized instrumentation, to obtain data for determining whether standard leakage-rate test measurements are adequate and, if not, what kind of

modifications would improve the measurements. Leakage-rate tests will also be conducted on individual containment penetration assemblies. Representative penetration assemblies will be subjected to environments up to and including those expected during a design-basis accident to evaluate their ability to maintain integrity under these extreme conditions. Data will also be obtained to determine the validity of extrapolating low-pressure leakage-rate test results to the leakage rate at design-basis-accident pressures. The effect of outside environmental conditions on leakage rate and/or leakage-rate measurements will also be determined.

An extensive series of simulated design-basis-accident tests is proposed. In these tests experimental data will be obtained to evaluate the ability of the CONTEMPT, CONTEMPT-PS, and other computer codes to predict the response of a containment atmosphere to design-basis-accident conditions.[92] Specifically, the tests will provide pressure-time and temperature-time data to which computer code predictions can be compared. The effectiveness of a containment spray system as an engineered safety feature will also be demonstrated by performance of a full-scale test.

The effects of design-basis-accident conditions, exclusive of radiation, on CVTR's engineered safety systems will be evaluated, including (1) determining the effects on reactor containment integrity, (2) determining the validity of extrapolating leakage-rate test results from ambient conditions to accident conditions, and (3) demonstrating the operability of key safety instrumentation and safety systems under accident environmental conditions. To accomplish these objectives, the following four design-basis-accident tests are proposed:

1. A hot air test is proposed during which the containment atmosphere will be raised to the accident temperature and pressure. The heat input will then be programmed to balance the heat loss so that steady-state conditions are maintained while measurements are taken.

2. A steam test is proposed at accident conditions, which for the CVTR are 21 psig, 215°F, and 100% humidity. Steam will be introduced into the vapor container as rapidly as possible to simulate an accident. When the design-basic accident conditions are reached, the steam will be

shut off and the containment atmosphere allowed to decay to ambient conditions at normal rates.

3. A second steam test is proposed that is identical to the first, except that a containment building spray system will be activated and used for pressure reduction.

4. A third steam test is proposed that is similar to the second steam test (pressure reduction) with the addition of a programmed heat source to simulate core decay heat following the accident.

A satellite objective of the overall program is to obtain experience and personnel training for in-plant engineered safety systems testing and analysis. The relatively short and inexpensive program proposed provides a starting point for the accumulation of needed testing experience that can be applied to more extensive future programs contemplated for larger power reactor facilities. This experience will be used to improve methods for anticipating and preparing for problems that may arise in conducting future in-plant testing programs. Accomplishment of the CVTR test program will provide directly applicable information on manpower requirements, equipment needs and operation, analytical methods, and costs that will be factored into future test programs.

4.4 Summary

Very little work is being done on developing new methods of testing containment systems, although basic techniques for performing such testing are available. The research on containment systems testing is primarily concerned with learning more about how containment systems perform during an accident. The information developed concerning testing of containment systems will be primarily applicable to determination of uncertainties in test results and means of extrapolating test conditions to accident conditions.

Some testing will be of direct interest to reactor operators, since it could possibly result in minimizing the time required to conduct periodic testing. At CSE, for example, the tests performed early in the program with reference and absolute systems to determine the amount of instrumentation needed, the required quality of the reference system, and

the necessary duration of testing to achieve a given accuracy of test results should be useful. Another example is the evaluation of continuous containment leakage-rate testing, which was conducted at CVTR. The results of this evaluation, combined with the work previously done by Yankee at Yankee Rowe and by Pacific Gas and Electric Company at Humboldt Bay, may provide information for reactor operators on what must be done to make a continuous low-pressure integrated leakage-rate test meaningful.

It is recommended that the three programs be closely coordinated and that an effective method for information exchange be established. It is recognized that some overlap and repetition will be necessary in view of the unique aspects of individual containment systems and the necessity of establishing base conditions for further experimentation. It may be possible to focus individual projects on problem areas that each specific facility is uniquely capable of exploring.

5. CONCLUSIONS

5.1 Available Information

Operational testing requirements for engineered safety features have not been clearly developed for the new large nuclear plants, since the preliminary safety analysis reports require only statements of intent. In most cases this type of information, including testing procedures, is not available until the later stages of design and is therefore currently being developed and reviewed. Consequently, published information is preliminary and subject to revision. Lack of this definitive testing information limited review of testing of engineered safety features.

5.2 Changing Technology

Containment system design is continuously changing. Examples of this changing technology are the new ice condenser pressure-suppression system of Westinghouse; suggested BWR underground installations, with variations in dry-well and pressure-suppression system geometry, for urban siting; and prestressed reinforced-concrete containment designs. Unfortunately the present research and development programs are not keeping up with these new concepts, and this represents a rather awkward position, especially in light of the rather large extrapolation of power ratings between existing reactor plants and those planned and licensed for construction in the next few years. A vigorous research and development effort is required to confirm the adequacy of proposed containment system designs and to establish testing methods that will insure containment integrity and operational reliability at all times. It must be shown that containment engineered safety features will operate successfully under design-basis-accident conditions and that all modes of primary system failure and their attendant effects on engineered safety features have been considered.

5.3 Effects of Related Systems

Development of related safety features could affect future containment system testing requirements. If, for example, it is concluded that the in-core cooling system must operate properly when required, this in turn implies that if adequate margins of safety exist, credit should be given for in-core cooling.* The maximum accident conditions could then be considerably reduced due to a reduction in fission-product release, and in turn the allowable leakage rate could be increased and still meet the basic requirements of 10 CFR 100.

5.4 Reliable Safety Features

Criterion 49 of the AEC General Design Criteria for Nuclear Power Plants[12] requires that the containment structure or system be designed to accommodate an accident in which the emergency core-cooling system fails to function; therefore (without regard for the Chinese Syndrome dilemma) the containment engineered safety features must be designed, built, installed, tested, and maintained and operated in the most reliable manner possible. Some form of containment cooling is essential to prevent destruction of the containment vessel due to overpressure. There can be no compromise in the manufacturing and inspection procedures used for individual system components. Many off-the-shelf items will not be adequate. Recent trends in electrical equipment failure bear out the need for tightening quality control specifications.

5.5 Test Reports

Based on limited review of existing leakage-rate test reports it is concluded that containment leakage-rate test results are not currently being reported in a manner that is conducive to comparisons between plants or to an independent analysis of the errors involved. In most cases there is insufficient information presented in the generally

---

*Present AEC criterion 49 assumes failure of the emergency core-cooling system.

available leakage-rate test reports to adequately support the degree of accuracy or confidence of the leakage result reported. It appears that many leakage rates could be two to three times the reported values. The majority of the errors are the result of inadequate precision of the test equipment used, inadequate test equipment calibration, and (more significantly) poorly designed sampling techniques.

5.6 Testing Problems

Experience to date apparently indicates that allowable leakage-rate requirements have been met. Major problems have occurred with air locks, ventilation valves, isolation valves, and similar equipment. The air lock problem has been essentially eliminated through the use of leak-testable double gaskets, and the ventilation-valve problem has been avoided by doing away with circulation of external air. Some of the problems associated with electrical and piping penetrations have been alleviated by incorporating testable features that can be used for leak and leakage-rate testing — some on a continuous basis. It should be recognized, however, that these penetration tests involve only relatively cool air and often no concurrent function of the process system.

5.7 Isolation Valves

Isolation-valve testing is an area in which further work appears to be required. Steam line isolation-valve systems are not presently given a dynamic closure test under simulated accident conditions. Significant differences in isolation-valve criteria prevail among the four principal reactor plant designers.

5.8 Monitoring Systems

Continuous low-pressure integrated leakage-rate monitoring, continuous high-pressure penetration monitoring, and weld-channel leakage monitoring systems serve to monitor containment leaktightness during plant operation and thereby detect leakage that would otherwise not be detected.

If continuous monitoring is not used, the leakage can go undetected and lead to reduction of Class A test intervals, as specified by the AEC Technical Safety Guide (see App. B). When the plant operator installs such monitoring systems, he must consider the possibility of a self-imposed shutdown penalty that may result from malfunction of the system itself in such a manner as to provide a false indication of an excessive leakage rate.

5.9 Leakage-Rate Correlation

Compared with the technology discussed in the other state-of-the-art reports in this series, that of containment systems leakage-rate testing is relatively well developed. The current development program in containment systems testing is concerned with optimizing techniques of leakage-rate testing and establishing a correlation between leakage rates at test and accident conditions that will permit leakage rates at test conditions to be quantitatively applied to accident analyses. Meaningful ambient test leakage-rate criteria could then be established and an attempt made to utilize experimental results in evaluating present calculational techniques. The overall program is primarily directed toward testing containment response to simulated design-basis-accident environments.

5.10 Testing Methods

In spite of the fact that most leakage-rate tests have been performed with the reference-vessel method, there is no theoretical basis for choosing this method in preference to the absolute method. The temperature equalization assumption made for the reference-vessel system is generally not attainable, and small leaks in the reference chambers can invalidate results. On the other hand, although the absolute method requires no more accuracy in pressure and temperature measurements, it usually results in more scatter of data and thereby increases difficulty of interpretation. There appears to be a preference for the reference-vessel method due to the historical adoption of this method by the manufacturers of steel containment vessels for their bare-vessel testing.

This method has been used by many reactor plant operators to test their completed containment systems, and the results have been accepted by the AEC Division of Compliance. However, it is generally considerably more expensive and complex and requires more measurements than the absolute method, with no significant gain in accuracy.

5.11 Concrete Containment

It appears that the absolute method of integrated leakage-rate testing will be utilized for many future large power reactor containment systems. The use of large concrete-encased structures, with their inherent stable temperature conditions, is a major factor in the selection of this method. Other factors are simplicity of test preparations and instrumentation and the lower overall cost.

5.12 Selection of Testing Method

The selection of a leakage-rate testing method involves the consideration of many factors. The method chosen must be applicable to (1) the containment system being considered, (2) the required sensitivity of the test, and (3) environmental effects. Additional considerations are time and personnel training, cost and availability of special equipment, and future applicability of the installed system. For very low leakage rates both the absolute and reference-vessel methods of leakage-rate determination are of marginal value. The selection of one method over the other is a question of whether a system of temperature sensors or a reference system can better represent the average temperature of the containment air and which system is more convenient to install and operate. There is no completely clear advantage for either method. Past experience, economic and technical factors, data processing, and administrative considerations all play a part in the choice of a method for a specific containment system application. The success of any specific test is probably more a factor of the care and planning that go into design and construction of the system and the interest shown in conducting the test than of the method used.

5.13 Preoperational Tests

Many reactor containment vessels have been leakage-rate tested twice, once right after the vessel was initially strength tested and prior to completion of the penetrations, and the second time after the penetrations were installed. This may be unnecessary, since the initial leakage-rate testing could be deferred until after completion of the containment structure, including installation of all penetrations. Steel vessel strength and initial leakage-rate testing are normally performed to fulfill the vessel vendor's contractual obligations. The trend toward concrete plus steel-liner containment designs may result in contractual arrangements that will obviate the need for leakage-rate testing prior to penetration installation. This procedure results in a minimum containment vessel pressure-time exposure consistent with AEC testing requirements.

5.14 Proposed ANS Standard

The present issue of the ANS proposed standard for leakage-rate testing will probably be extensively revised before being approved as a USA Standard, since there are certain sections that are already outdated. Steel containment vessel manufacturers normally perform leakage-rate tests on their completed bare vessels before penetrations and other equipment and structures are installed. Vessel manufacturers feel that the proposed standard is too restrictive if it is to apply to both bare- and completed-vessel testing. They believe that the absolute and reference method equipment requirements should be separated and that the new "wet" tests, presently being used for pressure-suppression systems, should be recognized. Exception is also taken to the proposed method of calculating leakage rates. The standard requires leakage rates to be calculated on an hourly basis to obtain a statistically averaged hourly leakage rate.

A completed containment leakage-rate test is much more difficult to perform than a bare-vessel test, and if vessel manufacturers feel that the requirements of the proposed standard are too restrictive to meet their test procedures and methods, certainly the reactor operators and/or

those people responsible for the completed plant leakage-rate tests will also voice objections.

5.15 AEC Technical Safety Guide

The AEC Technical Safety Guide is an interim document that defines specific types of tests and provides guidelines for establishing maximum allowable test leakage rates and retesting schedules. The need for this guide is apparent, and despite the fact that there may not be a rigorous basis for some of the suggested procedures, a conservative initial approach is better than none at all. The Guide is being used by the Division of Reactor Licensing and, as such, has become a tentative "standard" in this field.

5.16 NASA Report on Leakage-Rate Testing

A report by Keshock[56] comparing the absolute and reference-vessel methods of measuring containment-vessel leakage rates has been quoted and used to justify the choice of the reference-vessel method for other specific containment system tests. The report states that the reference-vessel method is a more accurate means of measurement than the absolute method and, in general, has resulted in misunderstanding and misuse of the document by others attempting to select a method of performing leakage-rate tests. General summary statements are made without the qualification that they apply only to those specific tests conducted at the Plum Brook Facility (see Sect. 3.2.1.1 and Appendix E of this report).

5.17 Safety Analysis Reports and Technical Specifications*

The guide to the organization and contents of safety analysis reports (dated June 30, 1966) established a uniform format that will be invaluable when reviewing future safety analysis reports. A new standard for technical specifications has also been proposed (see Sect. 2.3) that greatly

*This discussion is not directly concerned with testing per se.

reduces the amount of information previously requested. Use of these guides should result in streamlining the documentation required to obtain an operating license. A review of the safety analysis reports and available technical specifications for the reactor plants considered in this report provided the stimulus for this conclusion.

6. RECOMMENDATIONS

6.1 Codes, Standards, and Guides

At the present time, there are a number of proposed codes, standards, and guides under development that will affect the field of containment systems testing. This work is not proceeding as rapidly as it should, partly because the technology is being developed in parallel with it and partly because the personnel involved in preparing the standards do this work on a part-time basis and are heavily committed to other activities. It is recommended therefore that the AEC consider providing selected code and standard committees with technical staff support, either through national laboratories or private consultants, in order to expedite this important work. As an example of the urgency, the rapidly increasing use of concrete containment structures makes it imperative that criteria (now being established by ACI Committee 349) and a subsequent safety standard be completed expeditiously in order to be of real value.

6.2 Siting Criteria

Present siting criteria (and related reactor containment leakage rates) are based on 10 CFR 100 and the AEC guide for calculating distance factors.[9] It is recommended that the guide be revised to add a section covering engineered safety features. Credit has been given for engineered safety features incorporated in existing plants and those presently authorized for construction, and it appears that some type of quantitative credit schedule could be established for specific engineered safety features as a guide for reactor designers.

Engineered safety feature factors* as high as 21 have been approved by the AEC. However, it should be pointed out that final approval of a specific reactor plant is based not only on its power and engineered safety features but also on the specific site and atmospheric conditions. Perhaps separate subfactors could be established on the basis of site

---

*This factor is the ratio of the authorized (or proposed) power level to the power-level limit stated in the AEC guide[9] for actual site distances.

characteristics, such as topography and meteorology, and these, combined with the factors for specific engineered safety features, could establish an apparent reactor siting factor. A separate factor could also be applied to the containment system based on the detailed design and operational features of the vessel, its penetrations, and other features. Present reactor plants cannot meet the requirements of the AEC guide[9] without rather large siting distances. Credit for containment and engineered safety features is needed if urban siting is indeed an important economic consideration for future utilization of atomic power.

6.3 ANS Standard

The proposed ANS standard for leakage-rate testing should be revised and issued as soon as possible. This proposed standard specifies uniform methods of testing and essentially spells out what should be done, but it does not cover the specific details involved in performing a test. It is possible to follow this standard and obtain results that may or may not be adequate for a successful test. An additional section on error analysis should be included that gives both maximum "possible" error analysis for selecting test instrumentation and "probable" error analysis for examining test results.

6.4 Testing Reports and Guidelines

There is little advantage to be gained from the further analysis of past leakage-rate test data. The major need appears to be for guidelines with which to correctly define leakage-rate tests so that the accuracy and significance of the result can be predicted before the test is run. The most critical areas are those involving improved temperature and humidity sampling techniques so that the energy level changes can be distinguished from the containment atmospheric mass reduction due to leakage. Also guidelines are needed for the selection and calibration of test equipment commensurate with the accuracy required for a particular containment system and the desired length of the test. With such guidelines it should be possible for a utility or other reactor plant operator to

conduct a leakage-rate test with such accuracy and precision that the data could be independently verified and evaluated in a consistent manner, including the tolerance intervals and associated confidence levels.

The guidelines would not specify how a test was to be conducted; rather, they would serve to point out the possible ways, along with the advantages, the problems, and the pitfalls of each method. (A tentative outline for the suggested guidelines appears in Table 3.9.) The guidelines would also provide information of value to the CHORDS Program (Computer Handling of Reactor Data for Safety) at ORNL, which will eventually develop analytical procedures for use in the evaluation of reactor plant licensing and operational compliance data. (The AEC Division of Reactor Development and Technology has recently initiated a program for the "Development of Uniform Procedures for Containment Leak Testing" in accordance with the above recommendation. Phillips Petroleum Company at Idaho Falls has accepted the responsibility for directing the development and implementation of the procedures.) This activity is compatible with Phillips' plant applications and engineering tests programs (PA&ET) now under way.

Eventually a containment testing code could be prepared similar to the ASME power test codes, each of which contains a check list of items on which agreement should be reached prior to starting tests, specifies the instruments and testing apparatus required, lists precautions to be taken, gives instructions for computing and tabulating test results, and shows how to correct test results for deviations from specified test conditions. Information obtained from the CSE, CVTR in-plant testing, and LOFT programs, as well as past testing experience, could be used as the basis for preparing such a code.

6.5 Technical Specifications

AEC technical specifications state that the integrated leakage rates shall not exceed a certain percentage of the containment volume per 24 hr based on specific test pressures. No attempt is made to specify the desired precision or accuracy of the leakage rates. If the AEC can accept leakage rates several times larger than those reported, on the basis of

an overall conservative safety factor applied to accident and siting considerations, perhaps present testing methods will suffice. If, however, an assumption is made that the leakage rate must be accurately known within certain limits, the present practice should be reconsidered.

6.6 AEC Technical Safety Guide

The AEC Technical Safety Guide — Reactor Containment Leakage Testing and Surveillance Requirements is an interim document that defines types of tests and provides guidelines for establishing maximum allowable test leakage rates and retesting schedules. The AEC should consider formally releasing the guide to the reactor industry for comment. At present there is no document that substantiates the basis for the guide.

6.7 Continuous Monitoring Systems

It is recommended that the containment systems of all new light-water-cooled power reactors include a method for continuously monitoring leakage and leakage rate. A continuously recording and/or indicating alarm system should be incorporated to insure protection on a continuous basis. A criterion covering this subject should be considered as an addition to the AEC General Design Criteria.[12]

6.8 Continuous Monitoring Research

Research and development programs of both the AEC and industry should improve existing continuous leakage monitoring techniques and investigate new techniques to insure that containment integrity (to as great a degree as possible) is being maintained at all times. If possible, continuous monitoring methods should be developed to insure that all containment engineered safety features will function reliably and effectively following a loss-of-coolant accident.

6.9 Testing Techniques, Experience, and Practice

The technology of pneumatic strength testing of pressure vessels is well developed, and experience with testing steel vessels should be

largely applicable to the testing of concrete structures. Strength-testing requirements for concrete vessels are not, however, currently spelled out, and work being done on codes and standards for containment vessel design, construction, and testing should incorporate strength-testing requirements.

The advisability of installing miles of weld-seam testing channels and, particularly, requiring continuous testing of these channels is questionable. The subject probably should be given a thorough, objective review and recommendations developed concerning the future use of this system. Justification for utilizing weld-seam testing channels must be based on the increased assurance of leaktightness obtained from continuous monitoring balanced against the total cost and reliability of the installation. Design contractors are justifying a considerable reduction in radiographic inspection based on the use of testing channels. While this results in a cost savings it may not provide the integrity of 100% radiographic inspection.

The subject of isolation-valve testing has been handled to date in a rather haphazard manner compared with the way other aspects of containment systems testing have been approached. It is considered that this area requires additional technical and regulatory effort, and work should be initiated immediately to develop and standardize methods of performing isolation-valve tests.

Consideration should be given to design performance tests to prove that equipment and related instrumentation and controls for full-sized containment air-cooling units can function as required in a postaccident containment environment. To be meaningful, the tests must utilize the identical hardware and instrumentation to be installed in an operating reactor plant.

Reactor plant design contractors should conduct design performance tests of their actual containment air-cooling systems under simulated accident conditions. Tests of this type are part of construction and would best be performed either by the organization responsible for reactor plant design or by an outside laboratory as a service to the design organization.

Demonstration tests of typical containment spray systems under simulated accident conditions should be undertaken. Reactor plant design and construction contractors should test their actual containment spray systems early in the construction schedule prior to the installation of equipment in the containment vessel. The exact hardware, including related instrumentation and controls, must be utilized during the tests. (Perhaps some method can be devised to simulate the back-pressure transient that would actually be experienced during accident conditions.)

As mentioned previously, these tests are primarily part of a construction project and are best performed either by the reactor plant design organization or an outside service group. Periodic performance of this type of test after initial reactor operation may not be practical. Since the buildup of scale on spray system components (particularly those made of carbon steel) could cause problems with some spray nozzle designs, the materials utilized in containment spray systems should be carefully reviewed relative to the design of containment spray nozzles. Spray nozzle design should be such that there is a minimum possibility of plugging of the nozzles in the event the system has to be used. Care must be taken to fully dry the system after testing to avoid formation of corrosion products. Groundwork for such demonstration tests has been included in the AEC experimental program.

6.10 Containment Systems Testing Research

The CSE and CVTR in-plant testing programs are planned to obtain answers to most of the important questions in the field of containment system testing. The following recommendations point out several areas where additional work might be done and thereby increase the effectiveness of the current testing programs.

The CSE, LOFT, and CVTR in-plant testing programs should be closely coordinated and an effective method for information exchange established. The CSE and CVTR programs should develop the information on testing of containment systems that may be required in the LOFT program.

There is an incentive to reduce the time required to conduct integrated leakage-rate tests, since the cost of downtime for the large reactor

plants being designed and constructed today is substantial. Reactor owners and operators should be actively engaged in programs designed to reduce the time required for testing. The testing to be conducted in the early stages of the CSE test program should also be aimed at finding ways to reduce the time required to conduct these tests.

Many of the reactor containment structures being designed and constructed today utilize heavy concrete sections. However, the CSE containment vessel is essentially an uninsulated steel vessel. Since the resulting large difference in thermal time constant will substantially affect the time required to stabilize the reactor containment atmosphere this factor should be considered in future CSE testing. Although the vessel is housed in a large concrete building which may help compensate for the bare-vessel condition, consideration might be given to applying a foamed in-place insulation to the exterior of the CSE steel containment vessel to simulate the insulating effect of a concrete wall. (The above recommendation has now been recognized and a 1-in. Fiberglas insulation layer was added to the CSE vessel. Provision was also made for installing additional insulation, if required.)

Other areas related to postoperational leakage-rate surveillance testing that should be investigated in the CSE are the effects of (1) large heat sources and sinks and (2) large vapor evaporation and condensation sites.

It appears that the reference-vessel method of integrated leakage-rate testing is the preferred method of high-pressure periodic testing; however, research and development in connection with the testing of containment systems to be built in the near future should concentrate on both the reference and absolute methods. This is not to imply that other methods of testing should not be considered and/or investigated (such as radioactive tracer and sonic techniques, etc.)

As mentioned previously, it is considered that the technique of performing continuous low-pressure integrated leakage-rate tests makes good sense. These tests have been performed satisfactorily by using the pump-back method at several locations. Consideration should be given to expanding the CSE program to obtain information on continuous leakage-rate

testing and to determine the best method of conducting such tests. A program designed to investigate continuous leakage-rate testing at CSE need not be all-inclusive; it could be designed to supplement specific information that will be obtained from the in-plant testing program at the CVTR.

A wide variety of calculational methods has been used in the past to reduce the data obtained in leakage-rate tests. A standard method of data reduction and error analyses should be developed, possibly as a part of the CSE program.

6.11 Standard Terminology

As mentioned in the introduction of this report, there is a need to standardize the terminology used in safety analysis reports, technical specifications, and in leakage-rate test reports. It is recommended that the terminology used in the AEC Technical Safety Guide be adopted throughout the industry and that the leakage rates be reported in the specific terms outlined in Section 3.5. It would also be helpful if the test reports and the technical specifications included the specific pre-operational testing requirements, as well as the maximum design-basis-accident leakage rate. This information (which is finally established just prior to preparing the technical specifications) should appear in the final safety analysis report, but it is often difficult to find.

REFERENCES

1. W. B. Cottrell and A. W. Savolainen (Eds.), U.S. Reactor Containment Technology, USAEC Report ORNL-NSIC-5, Vols. 1 and 2, Oak Ridge National Laboratory, August 1965.

2. L. H. McEwen and J. E. Kjemtrup, Safety Objectives in Nuclear Reactor Design, Proceedings of the American Power Conference, Vol. 26, 1964.

3. Nucl. Eng., p. 694, September 1967.

4. Code of Federal Regulations, Title 10, Part 100, Reactor Site Criteria; see also Federal Register, Apr. 2, 1962.

5. R. C. Robertson, Review of Methods of Mitigating Spread of Radioactivity from a Failed Containment System, USAEC Report ORNL-NSIC-27, Oak Ridge National Laboratory (to be published).

6. Browns Ferry Nuclear Power Station Design and Analysis Report, Vols. I and II, Docket No. 50-259, Tennessee Valley Authority.

7. Preliminary Hazards Summary Report, Malibu Nuclear Plant, Unit No. 1, Report NP-14290, Docket No. 50-214, Department of Water & Power of the City of Los Angeles, November 1963.

8. G. W. Parker, Oak Ridge National Laboratory, personal communication, May 1967.

9. J. J. DiNunno et al., Calculations of Distance Factors for Power and Test Reactor Sites, USAEC Report TID-14844, Mar. 23, 1962.

10. AEC Press Release K-134, June 2, 1967.

11. Current Events, Nucl. Safety, 8(5): 526 (Sept.–Oct. 1967).

12. AEC General Design Criteria for Nuclear Power Plant Construction Permits, Federal Register, Vol. 32, p. 10213, July 11, 1967.

13. W. K. Ergen (Ed.), Emergency Core Cooling, Report of Task Force Established by the U.S. Atomic Energy Commission to Study Fuel Cooling Systems of Nuclear Power Plants, USAEC Report, 1967 (undocumented).

14. O. R. Compton, Is Power Equipment Failing Earlier?, Electrical World, Nov. 27, 1967.

15. Appendix A to Provisional Operating License DPR-13, Technical Specifications for the San Onofre Nuclear Generating Station, Unit 1, October 1966.

16. Report to the Atomic Energy Commission by the Regulatory Review Panel, July 14, 1965.

17. 10 CFR Part 50, Licensing of Production and Utilization Facilities, Technical Specifications for Facility Licenses, Safety Analysis Reports; Federal Register, Vol. 31, p. 10891, Aug. 16, 1966.

18. A Guide for the Organization and Contents of Safety Analysis Reports, June 30, 1966.

19. E. N. Cramer, The New Technical Specification – A Reasoned Approach, Nucl. Safety, 8(1): 72–74 (Fall 1966).

20. Remarks by James T. Ramey, Commissioner, U.S. Atomic Energy Commission, at 1966 Winter Meeting of the American Nuclear Society, Pittsburgh, Nov. 2, 1966.

21. Final Hazards Summary Report for Big Rock Point Plant, Vols. I and II, Report NP-11153, Docket No. 50-155, Consumers Power Company, Nov. 14, 1961.

22. Preliminary Hazards Summary Report, Vols. I and II, Docket No. 50-144, Carolinas-Virginia Nuclear Power Associates, Inc., July 15, 1959.

23. Preliminary Hazards Summary Report for the Dresden Nuclear Power Station, USAEC Report GEAP-1044, General Electric Company; Docket No. 50-10, Commonwealth Edison Company, Sept. 3, 1957.

24. Final Hazards Report for the RCPA Elk River Reactor, Report ACNP-65503, Docket No. 115-1, Allis-Chalmers Manufacturing Company, Jan. 14, 1965.

25. Final Hazards Summary Report, Humboldt Bay Power Plant, Unit Number 3, Docket 50-133, Pacific Gas and Electric Company, Sept. 1, 1961.

26. Final Hazards Summary Report for the Consolidated Edison Indian Point Reactor Core B, Docket No. 50-3, Consolidated Edison Company of New York, Inc., Dec. 11, 1964.

27. Preliminary Safeguards Summary Report, Oyster Creek Nuclear Power Plant, Unit No. 1, Docket 50-219, Jersey Central Power and Light Company, March 1964.

28. Pathfinder Atomic Power Plant Safeguards Report, Parts I and II, Report ACNP-5905, Docket No. 50-130, Northern States Power Company, Jan. 15, 1962.

29. San Onofre Nuclear Generating Station, Unit 1, Final Engineering Report and Safety Analysis, Vols. I, II, and III, Docket No. 50-206, Southern California Edison Company, San Diego Gas and Electric Company.

30. PWR Hazards Summary Report, USAEC Report WAPD-SC-541, Bettis Plant, Westinghouse Electric Corporation, September 1957.

31. Technical Information and Final Hazards Summary Report, Vols. I and II, Docket No. 50-29, Yankee Atomic Electric Company.

32. Haddam Neck Facility Description and Safety Analysis, Vols. I and II, USAEC Report NYO-3250-5, Docket 50-213, Connecticut Yankee Atomic Power Company.

33. Dresden Nuclear Power Station, Unit 2, Plant Design and Analysis Report, Vols. I, II, and III, Docket 50-237, Commonwealth Edison Company.

34. Indian Point Nuclear Generating Unit No. 2, Preliminary Safety Analysis Report, Vols. I and II, Parts A and B, Docket No. 50-247, Consolidated Edison Company of New York, Inc.

35. Oconee Nuclear Station Units 1 and 2, Preliminary Safety Analysis Report, Vols. I and II, Docket No. 50-269, Duke Power Company, December 1966.

36. Turkey Point Nuclear Generating Units No. 3 and 4, Preliminary Safety Analysis Report, Vols. I, II, and III, Docket 50-250, Florida Power and Light Company.

37. G. C. Robinson and T. R. Horton, Leak Testing of Reactor Containment Systems, Nucl. Safety, 7(2): 194 (Winter 1965–1966).

38. Big Rock Point Nuclear Plant, Consumers Power Company, Special Report, Containment Leak Rate Tests, 1964 and 1966, Docket No. 50-155, License No. DRP-6, Sept. 12, 1966.

39. CVTR Vapor Container Leak Rate Test, USAEC Report CVNA-208, Carolinas-Virginia Nuclear Power Associates, Inc., June 17, 1964.

40. CVTR Vapor Container Leak Rate Test, USAEC Report CVNA-266, Carolinas-Virginia Nuclear Power Associates, Inc., Nov. 18, 1966.

41. Report on Pressure Suppression Containment System Leakage Rate Testing at Humboldt Bay Power Plant Unit No. 3, Pacific Gas and Electric Company, Jan. 21, 1966.

42. Report on Core B – Preoperational Leak-Rate Test Reactor Containment System, Indian Point Station, Consolidated Edison Company, December 1965.

43. Pathfinder Atomic Power Plant Reactor Building Integrated Leakage Rate Test, Report PAPP 6401, Northern States Power Company, Nov. 18, 1963.

44. San Onofre Test Report, Southern California Edison, October 1966.

45. Shippingport Atomic Power Station, Test Evaluation, Report DLCS 1010102, Duquesne Light Company, Sept. 25, 1963.

46. J. DeVincentis, An Evaluation of the Yankee Vapor Container Leakage Monitoring System, USAEC Report YAEC-1005, Yankee Atomic Electric Company, Feb. 15, 1965.

47. J. DeVincentis et al., Vapor Container Integrated Leakage Rate Test, USAEC Report YAEC-1009, Yankee Atomic Electric Company, August 1965.

48. J. C. Archer, Building Breathing Space into Reactor Containment Vessels, Power, p. 116, November 1967.

49. Report on Pressure Testing of Reactor Containment for Connecticut Yankee Atomic Power Plant, Connecticut Yankee Atomic Power Company, Stone and Webster Engineering, October 1967.

50. Consolidated Edison Company of New York, Preliminary Safety Analysis Report for Indian Point Station Unit No. 3, Vols. 1 and 2 (A and B), Docket 50-286.

51. Brookwood Nuclear Station Unit No. 1, Rochester Gas and Electric Corp., Preliminary Facility Description and Safety Analysis Report, Nov. 2, 1965.

52. R. O. Brittan, Reactor Containment, Including a Technical Progress Review, USAEC Report ANL-5948, Argonne National Laboratory, May 1959.

53. Op. Cit., Ref. 1, Chap. 10, p. 10.65.

54. E. G. Keshock and C. E. DeBogden, Leak-Rate Testing of NASA Plum Brook Reactor Containment Vessel, NASA Report TN-D-1731, July 1963.

55. K. Jaroschek and E. Weippert, Tightness Investigations on Reactor Safety Pressure Vessels (Translation), Brennstoff-Wärme-Kraft, Zeitschrift für Energietechnik und Energiewirtschaft, Vol. 13, No. 3, Mar. 5, 1961.

56. E. G. Keshock, Comparison of Absolute-and-Reference-System Methods of Measuring Containment-Vessel Leakage Rates, NASA Report TN-D-1588, October 1964.

57. R. G. Clark and D. R. Koberg, PRTR Containment Vessel Pressure Test Experience, USAEC Report BNWL-109, Pacific Northwest Laboratory, August 1965.

58. G. C. Robinson, Containment-Vessel Leak-Rate Testing, Nucl. Safety, 6(1): 69–72 (Fall 1964).

59. D. W. Hayes, PRTR Containment Vessel Leak Rate Test Experience, USAEC Report BNWL-504, Pacific Northwest Laboratory, August 1967.

60. E. C. Tarnuzzer, Reactor Containment Leakage Rate Tests, USAEC Report CYAP-105, Connecticut Yankee Atomic Power Company, May 1967.

61. R. R. Maccary et al., Leakage Characteristics of Steel Containment Vessels and the Analysis of Leakage Rate Determinations, USAEC Report TID-20583, May 1964.

62. R. O. Brittan, Comparison of Methods of Determining Containment Leakage Rates, USAEC Report ANL-7310, Argonne National Laboratory, March 1968.

63. G. C. Robinson, Leak Tests of Containment Vessels, Nucl. Safety, 4(4): 85–87 (June 1963).

64. Op. cit., Ref. 1, pp. 10–94 to 10–96.

65. R. V. McGrath and L. P. Zick, Testing of Nuclear Containment Vessels, The Water Tower, January 1961.

66. E. C. Bailey, Commonwealth Edison Company, personal communication, January 1967.

67. Surry Power Station, Units 1 and 2, Preliminary Safety Analysis Report, Virginia Electric and Power Company, Mar. 20, 1967.

68. H. R. Payne, Experience with MSRE Secondary Containment, unpublished internal document, Mar. 3, 1967.

69. R. L. Koontz et al., Low-Pressure Containment Buildings, Component Tests and Design Data, USAEC Report NAA-SR-7234, Atomics International, Mar. 15, 1963.

70. R. L. Koontz et al., Conventional Buildings for Reactor Containment, USAEC Report NAA-SR-10100, Atomics International, July 25, 1965.

71. A. Thiel, Dichtigkeit und Dichtigkoitsprüfung in der Kerntechnik (Leaktightness and Tightness Testing in Nuclear Engineering), Atomkernenergie, 4(2): 75–80 (1959).

72. J. J. Cadwell, A List and Description of Leak Detection Methods, USAEC Report HW-73641, Hanford Atomic Products Operations, June 8, 1962.

73. Commonwealth Edison Company, Plant Design and Analysis Report – Quad Cities, Vols. I and II, Docket 50-254, May 31, 1966.

74. Shippingport Atomic Power Station, Test Evaluation, Report DLCS 2110141, Duquesne Light Company, June 14, 1961.

75. Minutes of Meeting on Containment Vessel Testing, Edison Electric Institute Nuclear Task Force, Palmer-House, Chicago, Illinois, Jan. 15, 1964.

76. C. G. Lawson, Emergency In-Core Cooling Systems for Light-Water-Cooled Power Reactors, USAEC Report ORNL-NSIC-24, Oak Ridge National Laboratory, 1967.

77. B. J. Garrick, W. C. Gekler, and H. P. Pomrehn, An Analysis of Nuclear Power Operating and Safety Experience, USAEC Report HN-185, Holmes & Narver, Inc., 1966.

78. Advisory Committee on Reactor Safeguards, AEC Press Release 293, Dec. 17, 1964.

79. H. N. Culver, Effect of Engineered Safeguards on Reactor Siting, Nucl. Safety, 7(3): 342–346 (Spring 1966).

80. T. W. Philbin, Containment Vessel Leakage Under Maximum Credible Accident Conditions, University of Michigan, Niagara Mohawk Power Corporation, 1967.

81. G. J. Rogers, Program for Containment Systems Experiment, USAEC Report HW-83607, Hanford Atomic Products Operation, September 1964.

82. G. J. Rogers, Detailed Program Outline of Experiments Planned for CSE, Pacific Northwest Laboratory, November 1965 (undocumented).

83. Tentative Revisions to CSE Program Outline, Attachment to letter from J. A. Lieberman, USAEC, to E. A. Wiggin, Feb. 15, 1966.

84. T. R. Wilson, Status Report on LOFT, Nucl. Safety, 8(2): 127–133 (Winter 1966–67).

85. T. R. Wilson et al., An Engineering Test to Investigate a Loss of Coolant Accident, USAEC Report IDO-17049, Phillips Petroleum Company, October 1964.

86. J. M. Waage (Ed.), Preliminary Safety Analysis Report – LOFT Facility, USAEC Report IDO-16981, Phillips Petroleum Company, April 1964.

87. J. M. Waage (Ed.), Preliminary Safety Analysis Report – LOFT Facility, Addendum, USAEC Report IDO-16981, Phillips Petroleum Company, November 1965.

88. CVTR In-Plant Engineered Safeguards Systems Test Program, Phillips Petroleum Company, Sept. 27, 1966.

89. CVTR Vapor Container Leak Rate Tests, USAEC Report CVNA-106, Carolinas-Virginia Nuclear Power Associates, April 1962.

90. Proposal for CVTR In-Plant Engineered Safeguards Systems Test Program, Phillips Petroleum Company, Jan. 17, 1967 (undocumented).

91. CVTR In-Plant Engineered Safeguards Systems Test Program, Phillips Petroleum Company – Addendum A, May 24, 1967 (undocumented).

92. L. J. Finnegan et al., A Computer Program for Predicting the Containment Pressure Temperature Response to a Loss of Fluid Accident, CONTEMPT, USAEC Report IDO-17220, Phillips Petroleum Company (to be published).

THIS PAGE

WAS INTENTIONALLY

LEFT BLANK

APPENDICES

THIS PAGE

WAS INTENTIONALLY

LEFT BLANK

Appendix A

REVIEW COMMITTEES AND INFORMATION SOURCES

ORNL Review Committee

W. R. Gall
G. C. Robinson
F. T. Binford

AEC Review Committee

R. R. Maccary, DRS-DRL
R. R. Newton, RDT

External Review Committee

R. O. Brittan, Argonne National Laboratory
G. J. Rogers, Pacific Northwest Laboratory
R. N. Bergstrom, Sargent & Lundy

Consultant

J. A. Hinds, NUS Corporation*

The following organization and persons were contacted or volunteered information during the preparation of this report:

AEC, Bethesda

H. Denton, DOC
L. Kornblith, DOC
R. Boyd, DRL

AEC, Germantown

G. A. Arlotto, DRL
S. J. Lanes, RDT
W. E. Gilbert, RDT

AEC, Idaho Operations

P. Litteneker

AEC, Oakbrook, Compliance Office

J. G. Keppler
L. Vorderbruwgen
J. Condelos
C. E. Jones
H. D. Thornburg

AEC, Berkeley, Compliance Office

G. Spencer
R. T. Dodds
W. G. Netter

---

*J. A. Hinds assisted in writing sections of the initial draft of this report.

Babcock & Wilcox Company

J. Taylor

Bechtel Corporation

R. Griffin
P. Schmitz
R. S. Bekowich

Chicago Bridge & Iron Company

R. V. McGrath

Commonwealth Edison Company

E. C. Bailey
J. Bitel

General Electric Company

J. E. Love
J. Russ
W. R. Smith
A. J. McCrocklin
R. D. Hill
P. W. Ianni
R. B. Gile
H. Hollinghouse
B. Cramer

GE Meeting at ORNL

R. McWhorter
J. Smith

Northern States Power Company

G. H. Neils

NUS Corporation

A. W. Chessick
J. T. Sevier
G. A. Freund

Oak Ridge National Laboratory

S. E. Beall
J. R. Buchanan
W. B. Cottrell
J. W. Michel
W. E. Browning
R. W. Schneider
H. G. O'Brien
R. H. Bryan
H. B. Piper

Pacific Gas & Electric

J. C. Carroll

Phillips Petroleum Company, NRTS

F. Schroeder
F. Bradburn
G. Bright
O. M. Hauge
N. Sowards
R. Smith
J. Norberg
G. Bingham
G. Dinneen

San Onofre

R. Baskin

Westinghouse Electric Corporation

G. Harstead
J. McAdoo
T. Packston
R. Salvatore
R. A. Wiesemann

Yankee Atomic Electric Company

W. P. Johnson

PAGES 157 to 158

WERE INTENTIONALLY

LEFT BLANK

SAFETY STANDARDS, CRITERIA, AND GUIDES FOR THE DESIGN, LOCATION, CONSTRUCTION, AND OPERATION OF REACTORS

III. TECHNICAL SAFETY GUIDE

Reactor Containment Leakage Testing and Surveillance Requirements

Revised Draft - December 15, 1966

This draft Guide is made available to the Division of Reactor Licensing for interim guidance in developing leakage rate testing and surveillance of reactor containment vessels.

U. S. ATOMIC ENERGY COMMISSION
DIVISION OF SAFETY STANDARDS
WASHINGTON, D.C.

7.5.1 REACTOR CONTAINMENT LEAKAGE TESTING AND SURVEILLANCE REQUIREMENTS

1.0 CONTAINMENT TESTING AND SURVEILLANCE

In recognition of the need to provide evidence, during service, of the capability of a containment system to perform its intended safety function, a program of testing and surveillance is developed.*

Because the leakage rate of containment system is a practical measure of its readiness to fulfill the containment function, the integrated leakage rate test is considered a principal and essential test (designated as a Class A test).

To justify the infrequent conduct of these Class A tests, a series of periodic surveillance tests (designated Class B and C tests) are suggested to monitor the principal sources of leakage development (penetrations and isolation valves) during the service interval between integrated leakage rate tests. These tests enable a suitable program of maintenance and repair to be developed to control leakages within acceptable limits.

For those engineered safeguards systems which are relied upon to control or mitigate containment leakages under post-accident conditions, a series of systems tests (designated Class D test) are suggested. These tests are intended to verify the capability of the systems to function (when needed) without loss of containment leak-tight integrity.

The test program suggests the performance initially of a preoperational leakage rate test (Class A test) at two pressure levels—one, at the calculated maximum peak accident pressure, and the other, at reduced pressure. These two tests measure the representative leakage characteristics of the containment system. Subsequently, at periodic intervals, Class A tests may then be conducted at a single test pressure—the reduced test pressure.

The reduced test pressure leakage rate test (Class A test) is justified by the conduct of the more frequent surveillance tests (Class B and C tests) at a test pressure equal to the maximum calculated peak accident pressure. These Class B and C tests provide the means to maintain the containment's leakage characteristics essentially as initially determined at the time of the preoperational Class A test.

---

*This testing and surveillance program has evolved from a survey of containment leakage characteristics and reported testing experiences.

A retest schedule is suggested which recognizes that the containment leakage potential and its consequences depend upon the magnitude of the containment calculated peak accident pressure and the design basis accident leakage rate as influenced by siting criteria. More frequent testing is considered necessary where low leakage rates are specified because test experiences have shown the difficulty in maintaining such limits.

The retest schedule program provides for a graduated increase in the interval between tests for the first three Class A tests. During this period, the adequacy of the test program can be evaluated by the observed leakage behavior of the containment system. The test frequency then seeks a level which is governed by the leakage measurements of the successive tests. Any leakage measurements which yield results in excess of allowable test limits will indicate the existence of deteriorative service conditions or inadequate maintenance programs during the test interval. On the other hand, leakage measurements within limits will attest to the adequacy of the test program. The test schedule reflects this flexible approach of allowing the observed leakage behavior of the containment system during service to dictate the test frequency.

The allowable test and operational leakage limits (to be specified in the license) establish the acceptance criteria for Class A tests. These limits are determined by adjusting the design basis accident leakage rate to reflect the differences between calculated accident and test conditions. A further adjustment is made to account for testing at pressures other than the calculated peak pressure of the design basis accident. Following each Class A test, and before resumption of plant operation, the containment leakage rate is intentionally decreased, by repairs if necessary, to provide a margin for any leakage increase which the containment system may experience in service. The margin is proportionally adjusted as the interval between Class A test is extended by the test frequency schedule.

1.1 PURPOSE

These minimum test requirements are intended to verify periodically the leak-tight integrity of the containment system, and to establish the acceptance requirements of each test. The purpose of the tests is to assure that leakage of the containment system is held within allowable test limits and that the periodic surveillance tests assure proper maintenance and repair.

2.0 TEST CLASSIFICATIONS

Four classes of tests are to be performed during the service life of the containment system, namely:

Class A Tests - overall integrated leakage rate measurements of the containment system under the "as is" service condition, at the time of the test.

Class B Tests - local leak detection tests of containment components which penetrate, or seal the boundary of the containment system.

Class C Tests - individual local operability and leakage tests of containment isolation valves.

Class D Tests - individual operability tests under Class A test conditions of those engineered safeguard systems which influence containment leakage under post-accident conditions.

3.0 CLASS A TEST REQUIREMENTS

3.1 Pretest Requirements - All Class A tests, other than the initial pre-operational test, are to be performed without any preliminary leak-detection surveys and leak repairs except to meet the requirements of Section 12.0. Major leak repairs are permissible provided the measured reduction in leakage thus attained is added to the Class A test result.

All systems which, under post-accident conditions, become an extension of the containment boundary are to be vented to the containment atmosphere prior to the conduct of a Class A test.

Closure of the containment isolation valves is to be accomplished by the normal mode of actuation and without any preliminary exercises or adjustments. Correction of closure malfunction is permissible provided the reduction in leakage effected by the repairs is included in the Class A test result.

3.2 Test Methods - Tests employing either the absolute pressure-temperature method or the reference vessel system in accord with the ANS-7.6 Standard* (or other method of demonstrated equivalency) are acceptable. The method chosen for the initial test will normally be required for the periodic retests.

---

*ANS-7.6 Proposed Standard for Leakage Rate Testing of Containment Structures for Nuclear Reactors, October 31, 1966.

The test duration is to be determined by the time required to yield meaningful results. The minimum test duration is to be not less than 24 hours unless test experiences of at least 2 prior Class A tests provide evidence of the adequacy of shorter test duration. The test accuracy is to be verified by a supplementary means to demonstrate the validity of measurements. An acceptable means is suggested by ANS-7.6 Standard.

3.3 Initial Leakage Rate Tests - After completion of containment construction and installation of all systems penetrating the containment boundary, the initial preoperational integrated leakage rate tests are to be conducted at two pressure levels in the order specified:

a. At 100% maximum containment operating pressure, P_p (corresponds with the maximum peak pressure calculated for the design basis accident analyses).

b. At pressure P_t, not less than 50% maximum containment operating pressure P_p.

The leakage characteristics yielded by measurements L_{pm} and L_{tm}, establish, by the method outlined in Fig. 1, the maximum allowable test leakage rate L_t, and the allowable operational leakage rate L_{to} to be specified in the license, for subsequent leakage rate tests.

3.4 Allowable Operational Leakage Rate - The allowable operational leakage rate L_{to} establishes the limit to be met before placing the containment into service and before resumption of plant operation following each Class A test.

As an acceptance criterion, the measured leakage rate L_{tm} initial test or L_m for retests is to equal or be less than L_{to} (see Fig. 1). Repairs and retests are to be performed, if necessary, until the acceptance criterion is met.

3.5 Periodic Leakage Rate Tests - Subsequent integrated leakage rate tests are to be conducted at a single test pressure P_t of Section 3.4(b) and both of the following acceptance criteria are to be met.

3.51 As an acceptance criterion, which governs retest schedule only, the measured leakage rate L_m is not to exceed the maximum allowable test leakage rate L_t as determined under Section 3.3. If the measured leakage rate L_m exceeds L_t, a revision of the retest schedule revision as required by Section 7.12 is to apply.

If L_m exceeds L_t at the 1 year test interval, the margin between L_t and L_{to} limits established by Section 3.3 shall be increased by the difference between L_t and L_m.

3.52 As an acceptance criterion to be met, before resumption of plant operation, the leakage rate, either as measured or following repairs and retests, is not to exceed the allowable operational leakage rate L_{to} as determined in Section 3.4

If repairs are necessary to meet the acceptance criterion, the integrated leakage rate test need not be repeated provided local measured reductions in leakages achieved by repairs, reduce the overall measured integrated leakage rate to a value not in excess of the allowable operational leakage rate L_{to}.

4.0 CLASS B TEST REQUIREMENTS

4.1 Class B tests are to be performed to detect or measure local leakages originating at the following containment components:

a. Containment penetrations whose design incorporate resilient seals, gaskets, or sealant compounds; piping penetrations fitted with expansion bellows;

b. Air lock door seals, including operating mechanisms and penetrations with resilient seals which are part of the containment boundary in the air lock structure.

c. Equipment and access doors with resilient seals or gaskets (seal welded doors are excluded); containment steel-to-concrete junction flexible seals.

d. Components other than a, b, or c, which develop leaks in service and require repairs to meet the acceptance criterion of any Class A test.

Acceptable alternate means of performing Class B tests include:

a. Examination of the pneumatically pressurized test chamber (provided for this purpose) of components by the soap bubble or the halide leak detector.

b. Measurement of the rate of pressure loss of the pneumatically pressurized test chamber of the containment component.

c. Surveillance of leakage by a permanently installed system having provisions for individual or group pressurization of containment penetrations or seals, and measurement of pressure loss (or flow of air through leak paths).

d. Other methods of demonstrated equivalency to a, b, or c.

4.2 Test Pressure - All Class B tests are to be performed by local pneumatic pressurization of the containment components, either individually or in groups, at a pressure not less than 100% maximum containment operating pressure P_p.

4.3 Acceptance Criterion - Repairs and retests are required when the leakage rate of all Section 4.1 containment components tested yields an average leakage rate per 24 hours per component in excess of 0.1% of L_p. Repairs of lesser leaks are optional.

4.4 Alternate Tests - Containment systems in which all of the components as defined under Section 4.1 are not fitted with means to enable Class B testing are to be subjected instead to the performance of a Class A test in accord with Section 3.5 at intervals specified under Section 7.22 except that the test pressure is to correspond with Section 4.2.

5.0 CLASS C TEST REQUIREMENTS

5.1 Class C tests are to be performed to verify operability and leak-tightness of those isolation valves on lines which penetrate the containment boundary and perform a containment function, i.e.,

a. Valves which communicate directly with the outside atmosphere (includes vacuum relief valves).

b. Valves which, in the event of valve leakage or valve malfunction upon isolation signal, may extend the containment boundary beyond that included during the conduct of Class A tests.

c. Valves which, under post-accident containment isolated conditions, are not expected to be maintained continually at system fluid pressures equal to or greater than the containment maximum operating pressure P_p.

5.2 Valve Operability Tests - Valve operability tests are to be conducted prior to leakage tests to demonstrate proper closure of normally open valves (or opening and closing of normally closed valves) upon isolation signal. Where complete valve motion (complete closure or opening) is impractical during plant operation, partial exercising of the valve is acceptable.

Valve malfunctions are to be corrected and reported with each Class A test report.

5.3 Valve Leakage Tests - Isolation valve leakage tests are to be performed by local pressurization (or other equivalent means) at a pressure not less than 100% maximum containment operating pressure P_p, and by employing any of the test methods applicable to Class B tests to detect leaks. Where valve seal-water systems are provided, the operation of the system is an acceptable alternate test.

5.31 Acceptance Criterion - Repairs and retests are required whenever the leakage rate of any valve tested yields an equivalent leakage rate per 24 hours in excess of 1% of L_p. Repairs of lesser leaks are optional.

6.0 CLASS D TEST REQUIREMENTS

6.1 Class D tests are to be performed to demonstrate the system operability (in accordance with design specifications) of those engineered safeguards systems (e.g., containment spray, containment air cooling, etc.) which, under post-accident conditions, are relied upon to limit or reduce directly or indirectly the consequent leakage from the containment.

The mode of operation of each system may be modified to the extent necessary or practical to enable operational testing of the system or its components, Such tests are to be conducted initially in conjunction with the preoperational leakage rate test, under the pneumatically pressurized condition of Section 3.3 a. Subsequent tests may be performed at normal ambient conditions.

System malfunctions are to be corrected and reported with the Class A test results.

7.0 CONTAINMENT PERIODIC RETEST SCHEDULE

7.1 Class A Retest Schedule

7.11 After the initial preoperational leakage rate test, consecutive intervals between tests are not to exceed the schedule of the table in Figure 2 for the applicable classification provided the acceptance criterion of Section 3.51 (first sentence) is met.

7.12 In the event the measured leakage rate of any Class A test (including leakage rate reductions effected by leaks repaired either directly prior to or during the test) exceeds the maximum allowable test leakage rate, L_t, the test schedule for successive tests returns to the beginning of the sequence of intervals of the applicable classification shown in the table of Fig. 2.

7.2 Class B Retest Schedule

7.21 At least two Class B tests (except for air locks) at approximately equally spaced intervals are to be performed during the interval between any scheduled Class A test, but no Class B test interval is to increase beyond 1 year. Air locks are to be tested at 4 month intervals irrespective of the Class B test schedule except when air locks are not opened during this interval, in which case, tests are to be performed after each opening, but no interval is to increase beyond 1 year.

7.22 If Class B tests are not practical (e.g., containment vessels not fitted with component test provisions), Class A tests are to be performed at intervals not greater than 1 year for the containment service lifetime (or until such time when modifications are made to enable Class B testing).

7.3 Class C Retest Schedule

7.31 Valve operability and leakage tests of isolation valves defined by Section 5.1 a, are to coincide with the schedule of Class B tests.

7.32 Valve operability and leakage tests of isolation valves defined by Section 5.1 b and c are to be performed during a scheduled Class A test or during other plant shutdowns to achieve at least one test per year.

7.4 Class D Retest Schedule

7.41 Class D tests are to be conducted during each scheduled Class A test or other plant shutdowns to achieve at least one test per year.

7.5 Test Interval Allowance - Class A test schedules may be varied by not more than 6 months to coincide with scheduled or unscheduled plant shutdown periods.

7.6 Permissible Periods for Testing

7.61 The performance of Class A tests is to be limited to periods when the plant facility is nonoperational and secured in the shutdown condition under administrative control and safety procedures defined in the license.

7.62 Prior to pressurization for and during the performance of any Class A test, the containment atmosphere temperature is to be maintained such that the lowest service metal temperature of pressure retaining components is at least 30°F above the maximum value of the ductile brittle transition temperature (NDTT) of the containment's constructional steels.

8.0 CONTAINMENT MODIFICATIONS

Any major modification or replacement of components of the containment system performed after the initial preoperational leakage rate test is to be followed by either a Class A test, or a Class B test to meet the acceptance criteria of Section 3.51 and Section 4.3 repsectively. Modifications or replacements performed directly prior to the conduct of a Class A test need not require a separate test.

9.0 CONTINUOUS LEAKAGE MONITORING SYSTEM

9.1 A continuous leakage monitoring system is acceptable as a supplemental means (but not in lieu of Class A tests) to measure or detect changes in containment leakage rates provided the average pressure P_m is not less than 10% of P_t.

9.2 The operation of a continuous leakage monitoring system may serve to monitor the containment leak-tight integrity during plant operation to avoid exceeding leakage limits which, if undetected, may lead to a reduction in Class A test intervals as required by Section 7.12.

9.3 The leakage rate measurements L_{mm} of the monitoring system, when compared with the leakage rate L_{tm} of the initial Class A test, establish the allowable operational leakage rate L_s (see Fig. 1) for subsequent operation of the monitoring system. The value, L_s, is to be reverified with each subsequent Class A test performed by comparison of L_{tm} measurement taken directly before the Class A test with the measured leakage rate L_m, and revised if necessary.

Each subsequent measured leakage rate L_{mm} derived from operation over a period sufficient to yield meaningful results may not exceed the allowable test leakage rate L_s. In the event this limit is exceeded, Class B tests and corrective repairs are required until the subsequent measured leakage rate L_{mm} meets the acceptance criteria.

10.0 MULTIPLE VESSEL CONTAINMENTS

Multiple interconnected containment vessels are considered as a single containment in the performance of Class A tests.

11.0 MULTIPLE BARRIER CONTAINMENTS

Containment systems with several leakage barriers are to be subjected to Class A tests to verify separately that the measured leakage rate is not in excess of allowable test leakage rate specified for each barrier.

12.0 ANNUAL INSPECTION

A detailed visual examination of the accessible interior and exterior of the containment structure and its components is to be performed annually and prior to any Class A test, to uncover any evidence of deterioration which may affect either the containment's structural integrity or leak-tightness.

The discovery of any significant deterioration must be accompanied by corrective actions in accord with acceptable procedures, nondestructive tests and inspection, and local testing where practical, prior to the conduct of any Class A test. Such repairs are to be reported as part of Class A test results.

13.0 REPORT OF TEST RESULTS

Each Class A test is to be the subject of a summary technical report, which includes a schematic arrangement of the leakage measurement system, the instrumentation employed, the test procedure, test results in graphical form, and the analysis and interpretation of leakage rate results in meeting the allowable leakage rates specified in the license. Summaries of Class B, C, and D test results as may be specified under the respective sections are to be included in the same report.

Fig. 1 - Determination of Allowable Leakage Rate Limits
Applicable to Containment Testing

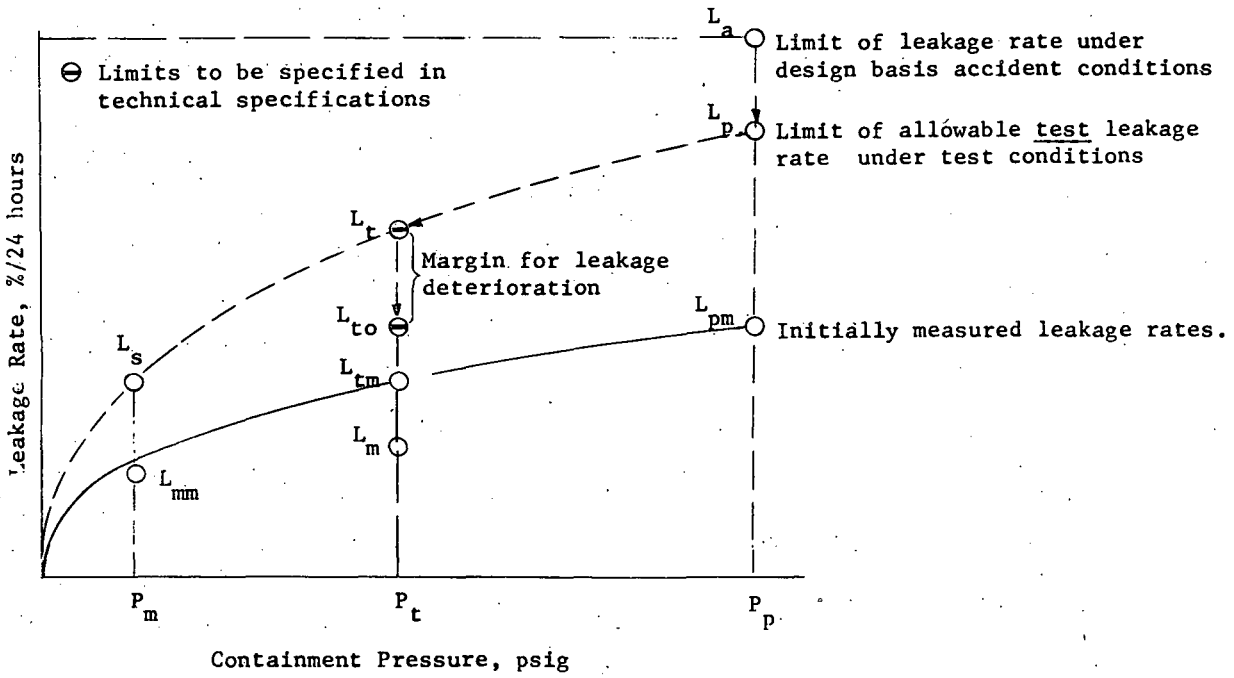

The leakage rate limits are established from the following relations:

1. Maximum allowable leakage rate at pressure P_p.

$$L_p = L_a (R_p T_p / R_a T_a)^{1/2}$$

2. Allowable <u>test</u> leakage rate L_t at pressure P_t, the lesser of

$$L_p (L_{tm} / L_{pm}) \quad \text{and} \quad L_p (P_t / P_p)^{1/2}$$

3. Allowable <u>operational</u> leakage rate L_{to} at pressure P_t

$$L_{to} = L_t (1 - A_L) \qquad \text{from Table 1 select } A_L$$

4. Allowable <u>test</u> leakage rate L_s of monitoring system (if provided) at pressure P_m

$$L_s = L_t (L_{mm} / Lm)$$

Notations and Definitions

P_d	containment vessel design pressure.
P_p	maximum containment operating pressure (calculated peak pressure) which may be imposed upon containment vessel as determined from the safety analyses of design basis accidents.
P_t	containment vessel test pressure selected to measure the integrated leakage rate for successive tests.
P_m	average containment atmosphere pressure maintained during the operation of a continuous leakage monitoring system
L_a	design basis accident leakage rate at pressure P_p, applied in the safety analyses to evaluate the consequences of containment leakage, under the calculated design basis accidents conditions in accord with the site exposure guidelines set forth in 10 CFR 100.
L_p	maximum allowable leakage rate at peak pressure P_p, under the test conditions of the containment air atmosphere.
L_t	maximum allowable <u>test</u> leakage rate at pressure P_t defining the limit governing retest schedule requirements.
L_{to}	allowable <u>operational</u> leakage rate at pressure P_t, defining the limit for both initial measurement L_{tm} and subsequent measurements L_m, at the outset of plant operation following a Class A test.
L_{pm}, L_{tm}	the initial measured leakage rates at pressure P_p and P_t respectively.
L_m	measured leakage rate of any subsequent integrated leakage rate test at pressure P_t.
L_{mm}	measured leakage rate derived from operation of continuous leakage monitoring system at pressure P_m (ave).
L_s	allowable operational leakage rate defining the acceptable limit of leakage rate measurements yielded by continuous leakage monitoring system with respect to leak repair requirements.
T_a, T_p	absolute temperature °R coincident with pressure P_p under accident and test conditions respectively.
R_a, R_p	equivalent gas constant of the containment atmosphere mixture or composition under accident and test conditions respectively.
A_L	Leakage deterioration allowance factor applied to obtain L_{to} limit (see Table 1) for the appropriate retest schedule classification.

Fig. 2 - Containment Retest Schedule Classification
(Class A tests - Integrated Leakage Rate)

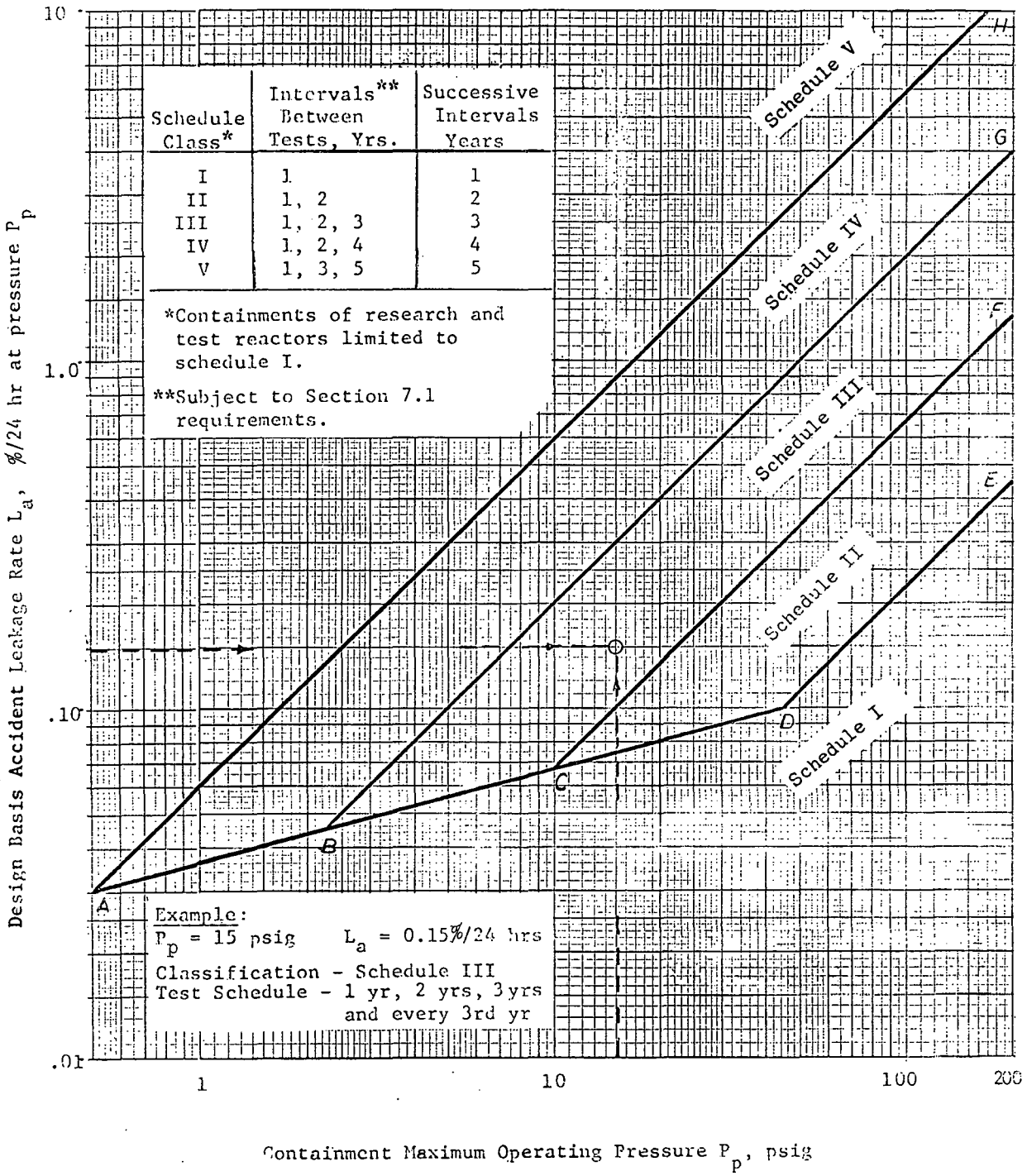

Table 1 — Leakage Deterioration Allowance, Factor A_L

Retest Schedule Classification	Preoperational Test	1 year Interval	2 year Interval	3 year Interval	4 year Interval	5 year Interval
I	0.10	0.10		-	-	-
II	0.10	0.20	0.20	-	-	-
III	0.10	0.20	0.30	0.30	-	-
IV	0.10	0.20	0.40	-	0.40	-
V	0.10	0.30	-	0.50	-	0.50

THIS PAGE

WAS INTENTIONALLY

LEFT BLANK

Appendix C

(Changes have been made to this copy of the Standard only to correct the formulas in Appendix B and to rectify obvious typographical errors. The changes are indicated by broken underscoring. See Section 3.2.2.)

ANS 7.60

PROPOSED STANDARD

FOR

LEAKAGE-RATE TESTING OF CONTAINMENT STRUCTURES

Approved by

American Nuclear Society

Standards Committee

June 14, 1967

THIS PAGE

WAS INTENTIONALLY

LEFT BLANK

AMERICAN NUCLEAR SOCIETY

It is the policy and practice of the Standards Committee of the American Nuclear Society through its subcommittees to formulate and promulgate proposed standards for the nuclear industry. This standard was prepared on the consensus principle and is based on the experience and knowledge available at the time. This standard is intended as a guide to aid the manufacturer, the consumer, and the general public. The existence of a standard does not in any respect preclude any party from manufacturing, selling, or using products, processes, or procedures not conforming to the standard. This standard is subject to periodic review and reaffirmation or revision. The existence of this standard does not relieve its user from the requirement that he exercise good judgment in its application, and that he provide himself with technical competence commensurate to his activities, nor does compliance with ANS Standards assure acceptability to federal, state, or local authorities.

THIS PAGE

WAS INTENTIONALLY

LEFT BLANK

FOREWORD

(This foreword is not a part of the proposed standard.)

This proposed standard was prepared by Evan F. Wilson of the Allis-Chalmers Manufacturing Company in his capacity as a member of Subcommittee ANS-7, Reactor Components, of the American Nuclear Society Standards Committee. The work was initiated early in 1959, and the standard has undergone some 12 or more reviews and revisions. Corrections and additions were incorporated into five formal revisions, of which this is the latest. Representatives of 16 companies involved in nuclear research and development and other companies involved in the fabrication and construction of containment vessels participated in the reviews of this standard. The following are presently members of Subcommittee ANS-7:

R. G. Hobson, Chairman, Westinghouse Electric Corporation
S. S. Bacharach, Aerojet-General, Sacramento
E. S. Brown, Idaho Nuclear Corporation, NRTS
A. W. Flynn, Ebasco Services, Inc.
W. R. Gall, Oak Ridge National Laboratory
E. Guenther, The Martin Company
K. C. Hoffman, Brookhaven National Laboratory
A. B. Holt, U.S. Atomic Energy Commission
H. Hopkins, General Atomic
R. L. Koontz, Atomics International
D. A. Mars, Babcock & Wilcox Company
J. F. Matousek, Argonne National Laboratory
W. J. McGonnagle, Associated Midwest Universities
A. W. Savolainen, Oak Ridge National Laboratory
R. P. Schmitz, Bechtel Corporation
J. F. Schumar, Argonne National Laboratory
C. Z. Serpan, U.S. Naval Research Laboratory
W. R. Smith, General Electric Company
N. O. Strand, General Electric Company

The standard was further considered by the ANS membership as a whole by publication for comments as Nuclear Engineering Bulletin, Vol. 2, December 1964. It was balloted on by the ANS Standards Committee and finally approved on June 14, 1967.

THIS PAGE

WAS INTENTIONALLY

LEFT BLANK

Contents

PROPOSED STANDARD
FOR
LEAKAGE-RATE TESTING OF CONTAINMENT STRUCTURES
FOR NUCLEAR REACTORS

1. Purpose and Scope

1.1 Purpose. The purpose of this standard is to specify uniform methods for determining the ability of a reactor container to retain, within the limits of permissible leakage rates, any gases, vapors, liquid, or other fluid materials that would be of a hazardous nature if not contained and which might be present in the containment structure as a result of an energy release, rupture, or leak in the nuclear reactor components or accessories. The need for restriction of leakage from the containment structure is based on the maintenance of public health and safety.

1.2 Scope. The provisions of this standard specify the practices and test requirements for the quantitative determination of leakage rates of containment structures for the housing of operating nuclear reactors. The provisions apply to containment structures for nuclear power, test, research, and training reactors, wherever a gas-tight containment structure is specified as a condition for operation.

2. Conjunctive Standards

2.1 Conditions of Applicability. This standard shall be applied in conjunction with such other standards and codes as are specified in the containment construction contract. Acceptance of a containment structure with respect to the requirements of this standard shall not relieve the supplier of responsibility for compliance with other codes specified for design, fabrication, construction, inspection, proof testing, and maintenance.

2.2 Conjunctive Standards. Standards or codes which may be conjunctive to the present standard are the following:

2.2.1 ASME Boiler and Pressure Vessel Code, Section 3, Rules for Construction of Nuclear Pressure Vessels.

2.2.2 ASME Boiler and Pressure Vessel Code, Section 2, Material Specifications.

2.2.3 ASME Boiler and Pressure Vessel Code, Case Interpretations.

2.2.4 USA Standard B31.1 Code for Pressure Piping (in draft).

2.2.5 USA Standard A57.1-1952: American Institute of Steel Construction, Specifications for the Design, Fabrication, and Erection of Structural Steel for Buildings.

2.2.6 USA Standard A58.1-1955: Building Code Requirements for Minimum Design Loads in Buildings and Other Structures.

2.2.7 USA Standard A89.1-1964: Building Code Requirements for Reinforced Concrete. (ACI-318-63)

2.2.8 National Fire Codes, National Fire Protection Association.

2.2.9 American Petroleum Institute, Recommended Rules for the Design and Construction of Large, Welded, Low-Pressure Storage Tanks.

3. Definitions and Descriptions of Terms

3.1 Containment Structure. A containment structure within the meaning of this standard shall be an erected building, vessel, or underground location that provides a housing for elements of the reactor system, including certain of the primary vessels, components, and accessories. The function of the containment structure shall be the emergency and secondary retention of radioactive materials in the event of their accidental release from the reactor vessel or system into the containment structure.

3.2 Leak. A leak, in the context of this standard, shall constitute an opening, however minute, that allows the passage of a fluid and which is detectable by the means and methods specified herein for leak detection or leakage measurement.

3.3 Leakage. Leakage shall be interpreted as the measurable quantity of fluid escaping from a leak. For the purposes of this standard, air shall be used as the reference fluid.

3.4 Leakage Rate. Leakage rate is that leakage experienced during a specified period of time. For the purposes of this standard, leakage rate shall be reported as the percentage by weight of the original content of air by weight, pressurized to the leakage-rate test pressure, that could escape to the outside atmosphere during a 24-hr test period. The leakage rate shall be that experienced at the outside atmosphere and containment structure air conditions prevailing during the period of leakage-rate testing.

3.5 Maximum Allowable Leakage Rate. The maximum allowable leakage rate governing the acceptability of the containment structure by those responsible for its reliability shall be that stipulated in the specification for the individual containment structure.

4. Preliminaries to Leakage-Rate Testing

4.1 Sequence of Tests. Proof leakage-rate testing should be conducted after the inspection and testing of welded joints, penetrations, and mechanical closures; completion of repair measures for the minimizing of leakage; and completion of containment structure pressure tests for strength. Where the containment structure is to be subsequently

covered with concrete or will otherwise be inaccessible for direct examination, particular care should be given to inspection of these areas prior to such coverage. Integral or local leak detection should preferably precede leakge-rate tests. For retesting, an initial record test shall be conducted at time periods and pressures established by the responsible regulatory agency, before any preparatory repairs are made. This will disclose the normal state of repairs of the containment structure. If the results of this test prove unsatisfactory, local and integral tests may be performed and any necessary work done to bring the leakage rate within the specified limits. A proof leakage-rate test shall then be made to demonstrate that the maximum allowable leakage rate is not exceeded.

4.2 Pressure Tests for Strength. Hydrostatic or pneumatic pressure tests to determine whether the containment structure complies with specified strength and design requirements shall precede leakage-rate testing. Also, the results of pressure tests shall meet the contractual specifications before leakage-rate tests are initiated.

4.3 Integral Pneumatic Leak-Detection Tests. The detection of individual leak locations, preliminary to leakage-rate testing, may be effected by local or integral pressurizing of the containment structure or both and the use of soap solution to provide air-bubble indications on exterior surfaces.

4.4 Local Leak-Detection Tests. Localized pressure tests may be advantageously employed in some circumstances where the part or area is especially susceptible to leakage or it is wished to employ higher pressures than in the integral-pressurizing detection test. Local leak-detection methods may include the pneumatic soap-bubble test, vacuum testing, air-ammonia and halogen sniffer tests, or other tests developed for special examinations. Local tests are particularly suitable for inspection of equipment prior to installation in the container and for inspection of moderately small but complex assemblies where leaks are difficult to locate and where the leakage rate is especially slow. Descriptions of local leak-detection methods are given in Appendix A. If the local leak-detection test is carried out with internal pressurizing, a pressure of at least 5 psig shall be used if the design pressure of the containment structure is above 10 psig. If the design pressure is 10 psig or less, a pressure of at least one half of the design pressure shall be used.

4.5 General Preparations for Test Pressurizing. Preparatory to test pressurizing for leakage-rate determination, contents of the containment structure that are sensitive to damage by a pressure differential, such as some instruments, should be removed or otherwise protected. Caution should also be used in the operation of fan and blower motors employed for air circulation where the load is a function of air density. The protection of the structure from damage, such as by underpressure, should be assured by checking the operative reliability of vacuum breakers. The vacuum-release devices should operate within 10% of their design pressures for internal or external loading. Lines containing fluids that are, or may become, pressurized should be valved off outside the containment to preclude accidental addition of fluids to the containment volume during test.

4.6 Time Scheduling of the Leakage-Rate Test. To assure favorable test conditions for leakage-rate tests without large or abrupt changes in atmospheric temperatures or barometric pressures, the scheduling of the test should be planned, insofar as feasible, in accordance with advance weather predictions. Final weather checks to assure safety of the containment structure should be made just prior to and during the test to assure that radical decreases in barometric pressure will not cause overstressing of the structure. To minimize temperature fluctuations caused by solar radiation, wind effects, or appreciable changes in temperature, a relatively windless day during a period of relatively stable weather conditions is preferred. The anticipated weather conditions during the test should indicate little or moderate barometric pressure variations in order to improve the reproducibility of leakage-rate results.

5. Leakage-Rate Test Methods

5.1 Applicable Test Methods. Leakage-rate test procedures applicable to this standard may be either the absolute method or the reference vessel method. The choice of either method shall be a matter of agreement between parties who are charged with responsible acceptance of the containment structure and those in charge of the leakage-rate test procedures.

5.2 Description of Methods. The absolute method of leakage-rate testing shall constitute the determination and calculation of air losses by containment-structure leakage over a stated period of time by the means of direct pressure and temperature observations during the period of test, with temperature detectors properly located to provide an average air temperature. The reference vessel method shall constitute the determination and calculation of air losses by observations of the pressure differentials between the containment structure and a gas-tight reference system, with the reference vessels located so as to represent, with reasonable accuracy, the average temperature of the aggregate containment air.

6. Test Equipment and Facilities

6.1 Pressurizing Facilities. Pressurizing facilities for containment-structure leakage-rate tests should be of sufficient capacity to bring the structure pressure to the test level within a sufficient period of time for scheduling with reference to favorable weather conditions. Valves and repressurizing facilities should be available for adjusting to subsequent atmospheric changes as appropriate to specific test requirements.

6.2 Temperature Measurements. All thermometric equipment shall be compared over a normal range of atmospheric variations with a reference thermometer of established calibration. Corrections based on the reference thermometer shall be available before the leakage-rate test is started. Thermometers, thermocouples, and thermographs employed in the leakage-rate tests shall be reproducibly readable to 0.2°F, or equivalent, or to the extent specified as the tolerable error for the maximum allowable leakage rate of the structure subject to test.

6.3 Pressure Measurements. Mercurial or aneroid barometers for the observation of containment structure and outside atmospheres shall be reproducibly readable to 0.1 mm (0.004 in.) or less or to the extent specified as the tolerable error for the maximum allowable leakage rate. Barographs for the recording of the outside atmospheric changes need be only of such accuracy as will indicate gross barometric changes pertinent to the scheduling of tests. All barometric equipment shall be compared with a single precision mercurial barometer equipped with vernier and shall be correctable for temperature and readable to 0.1 mm. Manometers for the reading of pressure differentials shall be of precision bore and plainly readable to 1 mm (0.04 in.). Hygrometers, psychrometers, or other instruments acceptable to the responsible regulatory agency, shall be available to determine relative humidities during the period of test within and outside the containment structure, when required. Suitable facilities shall be provided for representative sampling of the containment air for determination of the vapor-pressure effects of airborne moisture. Instrumentation for this purpose shall comply with ASTM Standard E 337-62.

7. Test Procedures

7.1 The Absolute Method. The absolute method of leakage-rate determination depends on the measurement of the temperature and pressure of a constant volume of containment structure air, with suitable correction for changes in temperature and humidity, under a nearly constant pressure difference with respect to the atmosphere outside the structure. It is assumed that the temperature variations during the test will be insufficient to effect significant changes in the internal volume of the structure or the partial pressure of water vapor in the contained air.

7.2 The Reference-Vessel Method. The reference-vessel method of leakage-rate determination depends on the changes in pressure of a constant volume of contained air compared with that of hermetically closed reference vessels that may be at the same pressure as the contained air at the start of the test or may have a small differential. The reference vessels shall be so placed and of such a geometry that they will assume the temperatures of the contained air within a time lag that is compatible with the frequency of the data taking. The reference vessels shall be subject to leakage-rate determination in accordance with the absolute method before and after their use for containment-structure testing according to the applicable procedures of this standard or may be checked by the halogen-sniffer test, helium-indicator test, or by retention of vacuum.

7.3 Pressurizing. Pressurizing for the leakage-rate test shall be carried out under atmospheric conditions that provide relatively low air humidity in order to avoid moisture condensation within the containment structure. Any moisture that condenses out of the pressurized air and collects at the bottom of the structure shall be drained off or otherwise removed prior to the start of the test to prevent reevaporation. Reference vessels should be similarly drained. To provide low humidity and to improve pumping efficiency, cool night air is usually preferred for pressurization.

The structure shall be pressurized to as near the design pressure as is possible under prevailing conditions or to pressures stipulated as a condition for test acceptance.

7.4 Temperature Measurements. Area surveys within the structure shall be made in advance of leakage-rate testing to establish any tendencies to regional variations in temperature. Additionally, thermometers and thermocouples shall be located at different parts of the structure wherever local variations may be expected in the course of the test. Fans or other means for air circulation may be used to equalize temperatures in any region where representative temperature measurements are taken and appreciable temperature variations exist.

The temperature pattern revealed by the survey shall be employed in connection with the mean representative temperature determination for the absolute method of leakage-rate testing. Location of reference vessels shall be made with consideration of the temperature pattern in order to reflect representative temperatures. Where testing experience with containment structures of various configurations has established appropriate locations for reference vessels, temperature surveys may be eliminated for those containment structures having similar proportions.

7.5 Personnel Access to Pressurized Containment Structures. Exposure of personnel to pressurized air and return to normal atmospheric pressures during the course of containment-structure leakage-rate testing shall be governed by approved decompression procedures involving a controlled depressurizing rate and waiting periods at intermediate pressures. For exposures of no longer than 200 min at pressures not greater than 14.3 psig, no intermediate holding periods or decompression stops are required provided the time period of pressure reduction in the air lock to atmospheric level is not less than 30 sec. For exposures to pressurization in excess of 14.3 psig, and for exposure periods including repetitive exposure within 12 hr, the practices should conform to those stipulated in Section 1.5, Diving Tables of the U.S. Navy Diving Manual, NAVSHIPS 250-538, January 1959.

7.6 Period of Test. The leakage-rate test period shall extend to not less than 24 hr of retained internal pressure. Leakage-rate tests should not be started until essential temperature equilibrium has been attained. Completion of the test should be scheduled to coincide with atmospheric temperatures and pressures close to those at the start of the test, as far as is possible. Check tests or repetition of tests shall be a matter of agreement between those responsible for the acceptance of the containment structure and those in charge of the leakage-rate testing.

7.7 Humidity Monitoring. The relative humidity of the containment structure shall be monitored during the course of the leakage-rate test so that vapor-pressure corrections can be made and to assure that the dew point is not reached and that there is no condensation of moisture in any part of the structure. Concrete structures within the containment structure should be properly cured prior to testing to minimize high humidity from moisture release; however, where appreciable evaporation may occur from

exposed surfaces of incompletely cured concrete, such surfaces may be covered with plastic sheeting, or other suitable precautions should be taken. Open pools of water may be similarly covered. To minimize the effect of variation in the partial pressure of water vapor, it is desirable to maintain the containment structure air at a reasonably constant temperature level, particularly near the completion of the test. Air conditioning, prior to testing, may be employed to approach this condition. Any moisture condensation occurring during the course of the test will result in an apparent leakage rate in excess of the actual rate. Vapor pressures due to moisture content in the containment atmosphere shall be determined by a wet- and dry-bulb aspiration psychrometer of the Assman type or by any other method of humidity measurement acceptable to the responsible regulatory agency.

7.8 Recording of Data. Pressure, temperature, and humidity observations shall be made within the containment structure and recorded during the course of the leakage-rate test at hourly or more frequent intervals. Pressure and temperature measurements of the outside atmosphere shall also be made and recorded at corresponding intervals and times. The times of observations shall be denoted in hours and minutes. A dated log of events and pertinent observations shall also be maintained during the test, and the correctness of data shall be attested to by those responsible for the test and, where specified, by a competent witness. Records of the leakage-rate tests shall be maintained in accordance with the terms of agreements with those responsible for the acceptance of the containment structures.

7.9 Computation of Leakage Rate — General. Because of errors introduced by deviations from stable conditions during the performance of a leakage test, the calculation of leakage rate from two sets of measurements taken 24 hr apart may prove unreliable. Leakage rates shall therefore be calculated on an hourly basis for at least 24 consecutive hours. The cumulative leakage determined from these hourly calculations shall be plotted against time, and a statistically averaged hourly leakage rate shall be obtained by a linear least-squares fit to the resulting graph. The 24-hr leakage rate shall be equal to 24 times this averaged hourly rate.

7.10 Computation of Leakage Rate — The Absolute Method. For the absolute method of leakage-rate testing, the calculation of the percent leakage of air from the containment structure in terms of the original amount contained and that which escaped during each hourly test period shall be made in accordance with the following formula. The average of at least 24 consecutive hourly determinations shall be used in establishing the percent leakage during a 24-hr period:

$$\text{Percent Leakage} = \left(1 - \frac{T_1 P_2}{T_2 P_1}\right) 100 ,$$

where

T_1 = mean absolute temperature of the containment structure air at the start of each hourly test period,

T_2 = mean absolute temperature of the containment structure air at the end of each hourly test period,
T_1 = absolute pressure of the containment structure air at the start of each hourly test period,
P_2 = absolute pressure of the containment structure air at the end of each hourly test period.

The derivation of this formula is given in Appendix B. Under leakage test conditions where condensation or evaporation of moisture is of an order to cause error, the partial pressure of water vapor should be subtracted from the containment air pressure in accordance with the following modification of the base formula:

$$\text{Percent Leakage} = \left[1 - \frac{T_1(P_{t2} - P_{V2})}{T_2(P_{t2} - P_{V1})}\right] 100$$

where

P_t = air + water vapor = total absolute pressure,
P_{V1} = water-vapor pressure at the beginning of each hourly test period,
P_{V2} = water-vapor pressure at the end of each hourly test period.

The partial pressures due to the presence of water vapor may be determined in accordance with the methods and the equation provided in ASTM Standard E 337-62, Standard Method for Determining Relative Humidity by Wet- and Dry-Bulb Psychrometer.

7.11 Computation of Leakage Rate — The Reference-Vessel Method. For the reference-vessel method of leakage-rate testing, the calculation of the percent leakage of air from the containment structure in terms of the original amount contained and that which escapes during each hourly test period, shall be made in accordance with the following formula:

$$\text{Percent Leakage} = \left[\frac{T_1(P_2' - P_2)}{T_2 P_1} - \frac{(P_1' - P_1)}{P_1}\right] 100$$

where P_1' and P_2' are, respectively, the absolute pressure of the reference vessel at the start and completion of each hourly test period. The average of at least 24 consecutive hourly determinations shall be used in establishing the percent leakage during a 24-hr period. A system of reference vessels so arranged and of such materials as to represent effectively their ambient temperatures permits the substitution of T_1/T_2 in the above equation by P_1/P_2. Under leakage-test conditions in which condensation or evaporation of moisture is of an order as to cause error, the partial pressure of water vapor should be subtracted from the containment air pressure in accordance with the following modification of the basic formula:

Percent Leakage =

$$\left[\frac{T_1(P'_{t2} - P'_{V2} - P_{t2} + P_{V2})}{T_2(P_{t1} - P_{V1})} - \frac{P'_{t1} - P'_{V1} - P_{t1} + P_{V1}}{P_{t1} - P_{V1}}\right] 100 .$$

The partial pressures due to the presence of water vapor may be determined in accordance with the equation provided in ASTM Standard E 337-62.

THIS PAGE

WAS INTENTIONALLY

LEFT BLANK

APPENDICES

THIS PAGE

WAS INTENTIONALLY

LEFT BLANK

Appendix A

Local Leak-Testing Procedures

(This material is informative only and is not a part of the Standard for Leakage-Rate Testing of Containment Structures for Nuclear Reactors.)

A.1 Applicability of Local Leak Tests. Local leak tests may be selected for the qualitative inspection of specific materials or components where methods other than air pressurizing are not objectionable and provide a more searching and convenient method. Such tests are particularly applicable to parts of or accessories to the containment structure.

A.2 Water-Submersion Test. The water-submersion test consists of covering an area that may contain a leak with clean water on the low-pressure side of a differential pressure. The water should be such as to provide full submergence with convenient observation of bubble formation. Repeated bubble formation occurring within 5 min after a previous bubble has been wiped away will indicate a leak.

A.3 Vacuum Test. The vacuum test employs a vacuum box that can be placed over an area to be tested and evacuated to at least a 5-psi pressure differential with the atmospheric pressure where the edge seals provide a tight seating closure. Air leakage through the area tested may be revealed by changes in a manometer level after the absence of seating leakage is determined by soap-suds indicators. If a soap solution is applied to the test area before covering with the vacuum box, leaks may be revealed by bubble formation visible through a glass-covered opening in the box within a 5-min examination period.

A suitable soap solution for air-leakage indication is one consisting of equal parts of corn syrup, liquid detergent, and glycerin. The solution should not be prepared more than 24 hr preceding the test, and bubble-formation properties should be checked with a sample leak every half hour during the test.

A.4 Air-Ammonia Test. The air-ammonia test is an air-pressurizing method employing anhydrous ammonia as an indicator. Where leaks are present, the leakage permeation of ammonia is revealed by a white chemical fog on probing the atmosphere with a swab wetted with 0.1 N hydrochloric acid. (Care should be taken with materials subject to chloride stress-corrosion.) Sulphur dioxide, such as from a sulphur candle, can also be used as the revealing reactant. Other methods employing ammonia use 1.0% phenophthalein in a solution of equal amounts of water and ethyl alcohol. A cloth dampened with the phenolphthalein solution and placed over the test area shows the location of leaks by a pink discoloration. The ammonia indicator can be introduced in anhydrous gas or by placing a cloth saturated with ammonia solution within the pressurized space.

A.5 Halogen Sniffer Test. The halogen sniffer test employs a halogen-compound leak indicator, such as freon gas, in the pressurized air. About 0.3 ounces per cubic foot of air is commonly used. Leakage is revealed

by traversing the test area with a detector that senses the effects of the halogen compound on ion emission from a heated metal surface. Locating the leak is best accomplished by holding the sniffer at about 1/2 in. from the surface to be examined and traversing this at a rate of 1/2 in./sec. A leak is indicated by a milliammeter pointer movement or audible signal. Detection is also made by flame coloration from halogen-indicator additions to the contained air. It should be realized that halogen detectors are sensitive to cigarette smoke or vapor from dry-cleaning fluids in recently cleaned clothing. Also, if halogen compounds are used with stress-corrosion sensitive materials, chloride attack is possible unless thorough cleaning follows this test.

A.6 Ultrasonic Leak Detector. Minute and localized sources of leakage may be identified and located by devices sensitive to ultrasonic sounds of escaping gas and which convert these to an audible signal.

Appendix B

Derivation of Formulas for Containment Structure Leakage Rates

(This material is informative only and is not a part of the Standard for Leakage-Rate Testing of Containment Structures for Nuclear Reactors.)

B.1 Definition of Symbols.

P_1 = absolute pressure of containment structure dry air at the start of the hourly test period,
P_2 = absolute pressure of containment structure dry air at the end of the hourly test period,
T_1 = mean absolute temperature at the start of the hourly test period, °F + 459.7° or °C + 273°,
T_2 = mean absolute temperature at completion of hourly test period,
w_1 = original weight of contained dry air at the start of hourly test period,
w_2 = final weight of contained dry air at the end of hourly test period,
V = internal volume of containment structure, assumed to remain constant,
R = gas constant for a perfect gas, applicable to dry air for the test conditions employed, is assumed constant
P_{V1} = water-vapor pressure at the start of the leakage-rate test,
P_{V2} = water-vapor pressure at the end of the leakage-rate test,
T', P', V' = reference vessel conditions.
P_t = absolute total pressure = air + water vapor = $P + P_V$.

B.2 Determination of Leakage Rate — The Absolute Method. In the absolute method

$$P_1V = w_1RT_1 \text{ and } P_2V = w_2RT_2 ,$$

$$\frac{w_1T_1}{P_1} = \frac{V}{R} \text{ and } \frac{w_2T_2}{P_2} = \frac{V}{R} .$$

Therefore,

$$\frac{w_1T_1}{P_1} = \frac{w_2T_2}{P_2} .$$

Whereby,

$$w_1 = \frac{w_2 T_2 P_1}{T_1 P_2} \text{ and } w_2 = \frac{w_1 T_1 P_2}{T_2 P_1} .$$

Accordingly,

$$\text{Leakage} = \frac{w_1 - w_2}{w_1} = \frac{w_2\left(\frac{T_2 P_1}{T_1 P_2} - 1\right)}{w_2 \frac{T_2 P_1}{T_1 P_2}} = 1 - \frac{T_1 P_2}{T_2 P_1} ,$$

and

$$\text{Percent Leakage} = \left(1 - \frac{T_1 P_2}{T_2 P_1}\right) 100 .$$

Corrections for changes in water-vapor pressure in the contained atmosphere shall be made by modifying the base equation as follows: NOTE: P_1 and P_2 are not measured, but rather $P_1 + P_{V1}$ and $P_2 + P_{V2} = P_{t1}$ and P_{t2}, respectively. P_1 and P_2 must be calculated from $P_1 = P_{t1} - P_{V1}$ and $P_2 = P_{t2} - P_{V2}$.

$$\text{Percent Leakage} = \left[1 - \frac{T_1(P_{t2} - P_{V2})}{T_2(P_{t1} - P_{V1})}\right] 100 .$$

B.3 Determination of Leakage Rate — The Reference-Vessel Method. In the reference-vessel method

$$P_1'V' = w'RT_1' \text{ and } P_2'V' = w'RT_2' ,$$

$$P_1' = \frac{w'RT_1'}{V'} \text{ and } P_2' = \frac{w'RT_2'}{V'} ,$$

$$w' = \frac{P_1'V'}{RT_1'} = \frac{P_2'V'}{RT_2'} \quad \text{assumed constant, no leakage,}$$

where the prime denotes the reference-vessel conditions. In the containment structure

$$P_1V = w_1RT_1 \text{ and } P_2V = w_2RT_2 ,$$

$$P_1 = \frac{w_1 R T_1}{V} \text{ and } P_2 = \frac{w_2 R T_2}{V} ,$$

$$w_1 = \frac{P_1 V}{R T_1} .$$

In the system of reference vessel and containment structure, the pressure difference between the two structures is expressed by

$$\Delta P_1 = P_1' - P_1 = R \left(\frac{w' T_1'}{V'} - \frac{w_1 T_1}{V} \right) ,$$

$$\Delta P_2 = P_2' - P_2 = R \left(\frac{w' T_2'}{V'} - \frac{w_2 T_2}{V} \right) .$$

By transposition

$$w_1 = \frac{V}{T_1} \left(\frac{w' T_1'}{V'} - \frac{\Delta P_1}{R} \right) ,$$

$$w_2 = \frac{V}{T_2} \left(\frac{w' T_2'}{V'} - \frac{\Delta P_2}{R} \right) ,$$

$$w_1 - w_2 = \frac{V w'}{V'} \left(\frac{T_1'}{T_1} - \frac{T_2'}{T_2} \right) + \frac{V}{R} \left(\frac{\Delta P_2}{T_2} - \frac{\Delta P_1}{T_1} \right) .$$

Substituting for w' the terms $(P_1' V' / R T_1')$ and dividing the expression for $(w_1 - w_2)$ by the equivalent of w_1, or $(P_1 V / R T_1)$, gives

Percent Leakage =

$$100 \left(\frac{w_1 - w_2}{w_1} \right) = \left[\frac{T_1 P_1'}{T_1' P_1} \left(\frac{T_1'}{T_1} - \frac{T_2'}{T_2} \right) + \frac{T_1}{P_1} \left(\frac{\Delta P_2}{T_2} - \frac{\Delta P_1}{T_1} \right) \right] 100 .$$

Since in the leakage-rate test made with the reference-vessel method it is assumed that there is temperature equalization between the reference vessel and the containment structure air, in the equation above

$$T_1 = T_1' \text{ and } T_2 = T_2' .$$

This reduces the equation to a general expression for leakage:

Percent Leakage =

$$\left(\frac{w_1 - w_2}{w_1}\right) 100 = \frac{T_1}{P_1}\left(\frac{\Delta P_2}{T_2} - \frac{\Delta P_1}{T_1}\right) 100 = \frac{1}{P_1}\left(\frac{T_1 \Delta P_2}{T_2} - \Delta P_1\right) 100 .$$

Under the conditions in which the test is started with the pressure in the reference vessel equal to that in the containment structure, $P_1 = P_1'$, and $P_1 = 0$; whereby

$$\text{Percent Leakage} = \left(\frac{T_1 \Delta P_2}{T_2 P_1}\right) 100 .$$

Under the conditions in which the test is ended with the containment structure air temperature the same as that at the start, $T_1 = T_2$, and

$$\text{Leakage} = \frac{1}{P_1}(\Delta P_2 - \Delta P_1) \text{ or } \frac{\Delta P_2}{P_1} \text{ if } \Delta P_1 = P_1 - P_1' = 0 .$$

The leakage rate is expressed in percentage values for a 24-hr period. The general expression for leakage rate becomes

$$\text{Percent Leakage} = \left[\frac{T_1(P_2' - P_2)}{T_2 P_1} - \frac{P_1' - P_1}{P_1}\right] 100 .$$

Corrections for changes in water-vapor pressure in the contained atmosphere shall be made by modifying the base equation as follows: NOTE: P_1', P_2', P_1, and P_2 are not measured, but are equal to $P_{t1}' - P_{V1}'$, $P_{t2}' - P_{V2}'$, $P_{t1} - P_{V1}$, and $P_{t2} - P_{V2}$, respectively.

Percent Leakage =

$$\left[\frac{T_1(P_{t2}' - P_{V2}' - P_{t2} + P_{V2})}{T_2(P_{t1} - P_{V1})} - \frac{P_{t1}' - P_{V1}' - P_{t1} + P_{V1}}{P_{t1} - P_{V1}}\right] 100 .$$

Appendix C

Suggested Method for Verification of Leakage-Test Accuracy

(This material is informative only and is not a part of the Standard for Leakage-Rate Testing of Containment Structures for Nuclear Reactors.)

In recognition of uncertainties associated with the performance of leakage-rate tests, it is desirable to use a supplemental method of verifying the validity of the measurements. A method that serves such a purpose involves the accurate measurement of the leakage rate through a calibrated leak intentionally superimposed on the existing leaks in a containment structure.

A practical and simple arrangement for superimposing a controlled and measurable leak on the containment vessel employs the orifice leak of a microadjustable instrument flow valve installed at a convenient penetration of the containment vessel. The flow through the valve is measured by means of a suitable flowmeter or rotameter. The leak orifice is selected to provide a flow under the test-pressure condition approximately equivalent to the leakage rate specified for the containment vessel.

The test procedure involves placing the calibrated leak system into operation after the leakage-rate test in progress is completed. The flowmeter readings are then recorded hourly over an interval of approximately 12 hr. Concurrently, readings of the vessel leakage-measuring system, which now records the composite leakage of both the containment vessel leaks and the superimposed orifice leak, are resumed on an hourly basis.

The readings of the flowmeter as a function of time enable calculation of the average leakage rate, L_0, through the calibrated orifice. From the analysis of the hourly readings taken with the vessel leakage-measuring system, the composite leakage rate, L_c, is determined. The vessel leakage rate, L', through containment vessel leaks is then obtained by deducting the orifice-measured leakage rate from the composite leakage rate, L_c; thus

$$L'_v = L_c - L_0 \ .$$

If the result of the leakage measurements obtained prior to the introduction of the superimposed orifice leak yields a leakage rate, L_v, in reasonable agreement with the calculated value, L'_v, the accuracy of the vessel leakage-measuring system is verified and the leakage-rate results validated.

THIS PAGE

WAS INTENTIONALLY

LEFT BLANK

Appendix D

PERTINENT AEC GENERAL DESIGN CRITERIA – 1967*

Criterion 10 – Containment (Category A)

Containment shall be provided. The containment structure shall be designed to sustain the initial effects of gross equipment failures, such as a large coolant boundary break, without loss of required integrity and, together with other engineered safety features as may be necessary, to retain for as long as the situation requires the functional capability to protect the public.

Criterion 49 – Containment Design Basis (Category A)

The containment structure, including access openings and penetrations, and any necessary containment heat removal systems shall be designed so that the containment structure can accommodate without exceeding the design leakage rate the pressures and temperatures resulting from the largest credible energy release following a loss-of-coolant accident, including a considerable margin for effects from metal-water or other chemical reactions that could occur as a consequence of failure of emergency core cooling systems.

Criterion 50 – NDT Requirement for Containment Material (Category A)

Principal load carrying components of ferritic materials exposed to the external environment shall be selected so that their temperatures under normal operating and testing conditions are not less than 30°F above nil ductility transition (NDT) temperature.

Criterion 51 – Reactor Coolant Pressure Boundary Outside Containment (Category A)

If part of the reactor coolant pressure boundary is outside the containment, appropriate features as necessary shall be provided to protect the health and safety of the public in case of an accidental rupture in

---

*From Ref. 12.

that part. Determination of the appropriateness of features such as isolation valves and additional containment shall include considerations of the environmental and population conditions surrounding the site.

Criterion 52 – Containment Heat Removal Systems (Category A)

Where active heat removal systems are needed under accident conditions to prevent exceeding containment design pressure, at least two systems, preferably of different principles, each with full capacity, shall be provided.

Criterion 53 – Containment Isolation Valves (Category A)

Penetrations that require closure for the containment function shall be protected by redundant valving and associated apparatus.

Criterion 54 – Containment Leakage Rate Testing (Category A)

Containment shall be designed so that an integrated leakage rate testing can be conducted at design pressure after completion and installation of all penetrations and the leakage rate measured over a sufficient period of time to verify its conformance with required performance.

Criterion 55 – Containment Periodic Leakage Rate Testing (Category A)

The containment shall be designed so that integrated leakage rate testing can be done periodically at design pressure during plant lifetime.

Criterion 56 – Provisions for Testing of Penetrations (Category A)

Provisions shall be made for testing penetrations which have resilient seals or expansion bellows to permit leak tightness to be demonstrated at design pressure at any time.

Criterion 57 – Provisions for Testing of Isolation Valves (Category A)

Capability shall be provided for testing functional operability of valves and associated apparatus essential to the containment function for

establishing that no failure has occurred and for determining that valve leakage does not exceed acceptable limits.

Criterion 58 – Inspection of Containment Pressure-Reducing Systems (Category A)

Design provisions shall be made to facilitate the periodic physical inspection of all important components of the containment pressure-reducing systems, such as, pumps, valves, spray nozzles, torus, and sumps.

Criterion 59 – Testing of Containment Pressure-Reducing Systems Components (Category A)

The containment pressure-reducing systems shall be designed so that active components, such as pumps and valves, can be tested periodically for operability and required functional performance.

Criterion 60 – Testing of Containment Spray Systems (Category A)

A capability shall be provided to test periodically the delivery capability of the containment spray system at a position as close to the spray nozzles as is practical.

Criterion 61 – Testing of Operational Sequence of Containment Pressure-Reducing Systems (Category A)

A capability shall be provided to test under conditions as close to the design as practical the full operational sequence that would bring the containment pressure-reducing systems into action, including the transfer to alternate power sources.

THIS PAGE

WAS INTENTIONALLY

LEFT BLANK

Appendix E

REVIEW OF NASA REPORT COMPARING ABSOLUTE AND REFERENCE-VESSEL METHODS OF LEAKAGE-RATE TESTING

R. O. Brittan*

A NASA document (TN D-1588) entitled "Comparisón of Absolute- and Reference-System Methods of Measuring Containment-Vessel Leakage Rates,"† by E. G. Keshock, was written on the basis of a NASA document (TN D-1731) entitled "Leak-Rate Testing of the NASA Plum Brook Reactor Containment Vessel," by the same author plus C. E. DeBogdan, and an additional test. The remission of the three words "in these tests" in the comparison document has unfortunately led to considerable ambiguity, misunderstanding, and misuse of Keshock's analysis by others planning and running leakage-rate tests on other, different facilities. This difficulty was brought to my attention by F. C. Zapp of ORNL and by statements made in other leakage-rate test reports, notably the ones on HFBR by BNL.

In this review I have set down the results of a lengthy study I made of documents TN D-1588 and TN D-1731 in an attempt to determine how the ambiguities, misinterpretations, and misuses came about. If the three words "in these tests" had been included, the users would have been more careful in applying the information to their own tests. In addition, if the detailed bits of information had been emphasized or deemphasized to varying degrees the difficulties may never have arisen. I dwell in some detail on the details in an attempt to change these emphases, redirect results used in forming the conclusions, and remove apparent ambiguities.

1. In the summary, p. 1 (2), it is unfortunate that the words "in these tests" were not added. Such a conclusion would not necessarily apply in tests on other systems in which different precisions are ascribed to the measured variables, or in which variation in shape of the temperature distributions in the containment during the tests would lead to

---

*Argonne National Laboratory.

†A copy of this document should be obtained before reading this review.

different sampling inaccuracies, or in which the temperatures varied widely, or in which larger diameter reference vessels are used. The author points this out explicitly in (3) of second paragraph, p. 2.

2. It is possible that the observation in summary statement (4) results because the precision in determining pressures in the "absolute" method is an order of magnitude less than in the "reference" method. It is unfortunate that in these tests the same precision was not employed in both methods to determine the pressures and pressure differences. Statement (3) (p. 1) in the summary implies that the sampling error using the nickel wire in Test 4 should be substantially smaller than that realized in the first three tests. If equal precision in pressure determinations had been employed it might have been shown that the reference vessel acting as a "gas thermometer" (as suggested on p. 8) gave a more precise indication of the "average" temperature than the nickel wire. (The possible sampling error was estimated in the first three tests to yield an error in determining true average temperature of ~0.2°F.)

3. Regarding the middle paragraph of p. 3 (Introduction), if the reference system is constructed so that the error contribution due to lag is negligible, ΔT and ΔT_r will be equal and the error contributions of each cancel. Then it would not be necessary to make the temperature measurements. Reference (4) however assumes that there are some reference systems in which the possible lag error is not negligible. In such cases, the temperature measurements must be taken to either correct for the lag or prove it does not exist or is negligible in that particular test. In the tests reported here, the lag is shown analytically in document TN-D-1731, Table I, to yield a possible error no greater than 0.02°F for the 2-in.-diam system if neglected. This would correspond to a fractional error in leakage-rate determination of no greater than $0.02/530 \approx 0.00004$. This is about 13% of the total possible error claimed. But it is not zero. It would be difficult to determine the lag error more precisely. However it should be included in estimating the maximum possible error to be expected. Another reason for making the temperature measurements in both methods is to prove that the reference system did not leak appreciably during the test. This, of course, could be proved

by a separate test on the reference system following the main leakage-rate determination. However this adds to time and cost and difficulty of the test program. The sampling error must be estimated and included for both methods, if one is trying to estimate the precision of leakage-rate determination. As pointed out on p. 8 in the middle paragraph, the ratio of indicated average temperature to true average temperature is neglected in computations for both methods. Test results reported here indicate that the change in these ratios is very small. It is the change in the ratio which introduces error. The author does indeed take account of errors due to temperature sampling and thermal lag as stated in the third paragraph on p. 10.

4. In the last paragraph on p. 8 it is again necessary to point out that (1) would only be a valid argument if the same precision is used in determining pressures or pressure differences for the two methods. This was not the case in these tests [see 2 above]. Furthermore, use of a known leakage rate as proposed in (2) has nothing to do with making evident any "fundamental inaccuracy in equation (16)." It only would substantiate that the magnitude of such an inaccuracy yields small error compared to the leakage rate itself, for both methods. If it is true for one method it is true for the other.

5. In equation (17) and (18) the quantity $\frac{\Delta P_h}{P_1}\frac{T_1}{T_2}$ is added to one side of equations (3) and (16) without changing the other side, thus the equality is destroyed unless $\frac{\Delta P_h}{P_1}\frac{T_1}{T_2}$ is zero. This is not permissible. (The quantity $\frac{\Delta P_h}{P_1}\frac{T_1}{T_2}$ is substantially the fractional change in weight of water vapor.)

6. The comments above [2, 3, and 4] are pointed up by the author in the third and fourth paragraphs of p. 10. Here he admits that it is the greater error due to less precision in determining P compared with that from determining ΔP which gives the greater scatter of data for the absolute method; i.e., ω_P in Eq. (22) is greater than $\omega_{\Delta P}$ in Eq. (23). Also, although the absolute method error contains an additional error arising from the absolute-pressure measurement, the reference method

contains an additional error arising from the pressure difference method that the absolute method does not.

7. In the discussion on pp. 14 and 15 the author points up two things which are important to consider in comparing results of these tests with potential results of tests on other systems. First he remarks on the uniformity of the temperature field and the fact that the use of the vastly better sampling of the nickel wire resistance thermometer did not improve scattering of results compared to the use of a single platinum resistance thermometer. He goes on to point out, however, that the precision of obtaining the pressure in the containment is much less than that of obtaining the pressure difference between reference vessel and containment. Thus, the scatter should be attributed to this vast difference in precision rather than lack of precision resulting from attempting to obtain true average temperatures. The latter lack of precision results only if the shape of the temperature distribution changes during the test. Unless the shape changes, the difference between two indicated average temperatures varies insignificantly from the difference between the two corresponding true average temperatures. In reality, the determination of "true average temperature" is the aim during tests. Its definition is given as follows:

Let ΔW_n be weight of air in volume segment ΔV_n which is invariant, let T_n be temperature of air in volume segment $\Delta V_n = f(t)$, let P be pressure everywhere, $P = f(t)$, let R be gas constant, and let V be total volume $= \sum_n \Delta V_n$ = constant. Then

$$\Delta W_n = \frac{P}{R} \frac{\Delta V_n}{T_n}$$

and

$$W = \sum_n AW_n = \frac{P}{R} \sum_n (\Delta V_n / T_n) = \frac{P}{R} \frac{V}{T_{av}} ,$$

$$W_1 = \frac{P_1}{R} \sum_n (\Delta V_n / T_{n_1}) = \frac{P_1}{R} \frac{V}{T_{av_1}} ,$$

$$W_2 = \frac{P_2}{R} \sum_n (\Delta V_n/T_{n_2}) = \frac{P_2}{R} \frac{V}{T_{av_2}} .$$

Thus, in general,

$$T_{av} = V \Big/ \sum_n (\Delta V_n/T_n)$$

and

$$T_{av_1} = V \Big/ \sum_n (\Delta V_n/T_{n_1}) ,$$

while

$$T_{av_2} = V \Big/ \sum_n (\Delta V_n/T_{n_2}) .$$

As n becomes very large (i.e., volume segments become very small) this approaches the integral form

$$T_{av} = V \Big/ \int_V \frac{dV}{T(V)_1} = \text{"true average temperature."}$$

Thus the greater the number of sampling positions for T (uniformly distributed), the closer is the approach to the "true average temperature." The three thermocouple positions are not "uniformly distributed" but are grouped near the middle of the containment. Their distribution is somewhat better with respect to determining the "true average temperature" of the reference system. On the other hand, the nickel wire provides an infinite number of sampling points, and if properly distributed with respect to the temperature distribution (which it is not, necessarily, in these tests) would in fact perform the integral operation shown above. For the thermal stability indicated in Test 4, it would be difficult to ascribe an error >0.01°F to determining the change in "average" temperature $T_{av_2}-T_{av_1}$.

8. The error analysis of Ref. 4 is not contradicted (p. 10, par. 5). It assumes that the test has not been run and it is desirable to determine the precision of measurement required to detect within an acceptable fraction the error which could "possibly" be introduced in determining the

leakage rate due to lack of precision. It does not analyze test results or deal on uncertainties connected with sampling. It merely gives an indication of how precise temperature and pressure must be determined to ensure that resulting errors are smaller than the leakage rate. The two formulae for the "absolute" and "reference" methods should not be used to reach conclusions as to the relative accuracies of the two methods unless the error in measuring a temperature in one is the same as in the other and the error in measuring a pressure in one is the same as in the other. The analysis in Ref. 4 also assumes that a thermal lag does exist between the reference vessel and the containment. At the time this work was done, the reference vessels were much larger, and it was necessary to either prove that the lag was negligible or correct for it. Even so, if the "possible" error analysis of Ref. 4 is applied to these tests, it would be shown that for the precisions stated or implied, the reference method would be more accurate. Thus no contradiction exists.

To show this, assume that before the test one had the following information on precision of determining temperatures and pressures:

a. For the nickel wire, the least division on the bridge (0.0001 ohm) is equivalent to 0.00111°F. Resistance of nickel = 6.84 micro-ohm cm, wire length = 550 ft, cross-sectional area = 0.00331 cm^2, α = 0.00260 ohm/°F-ohm. 1 division = 0.0001 ohm. Therefore

$$\frac{1}{\alpha}\frac{\Delta R}{R_1} = \left(\frac{1}{0.00260}\right)\frac{0.0001}{(6.84 \times 10^{-6}) \times 550 \times 12 \times 2.54 \times (1/0.0033)}$$

$$= 0.00111°F/\text{division} .$$

b. For the measurement of P, possible error in determining P is error in determining difference between containment air pressure and outside (atmosphere) pressure (0.05 in. H_2O) using water manometer, plus error in determining atmospheric pressure using Hg barometer (0.01 in. Hg). Thus, error in measuring P_1 could be as great as [0.05 × (1/13.6) + 0.01] = 0.0137 in. Hg.

c. Neither report gives the density of liquid in the manometer used to determine ΔP between reference vessel and containment. The precision

is 0.01 in. = least division. Thus possible error in determining ΔP = $(2 \times 0.01) \times$ (density of liquid/13.6) in inches of mercury. If the density is that of water, the error would be $(2 \times 0.01 \times 1/13.6)$ = 0.00147 in. Hg. If the liquid density is 1.9 g/cc (probable), the error in determining ΔP would be 0.00280 in. Hg.

d. For the iron constantan thermocouples, the error in measurement of the reference system temperature could be as great as 0.0357°F. [For iron-constantan 50°F ≡ 1.44 mv. So with smallest division ≡ 0.001 mv, error = $(50/1.44) \times 0.001$ = 0.0357°F].

e. The error in determining ΔP_H is not given explicitly. However, for the representative data given in document TN-D-1731, p. 14, and assuming that the error in determining dew-point temperature is ~0.1°F (p. 12 of document TN-D-1588) an error of ~0.005 in. Hg in determining ΔP_H is possible.

Using the method of Ref. 4, which involves determining the maximum fractional errors in leakage rate due to maximum possible errors in determining temperature and pressure from the following formulae for the "absolute" and "reference" systems in a 24-hour test,

$$\left(\frac{E_L}{L}\right)_A = \left(\frac{2E_T}{T} + \frac{2E_P}{P}\right)$$

and

$$\left(\frac{E_L}{L}\right)_R = \left(\frac{4E_T}{T} + \frac{2E_{\Delta P}}{P}\right)$$

For the precision indicated in a thru d above

"Absolute" method: E_T = 0.0011°F (nickel wire) $\quad E_p$ = 0.0137 in. Hg

T = 530°F $\quad P$ = 38 in. Hg

$$\left(\frac{E_L}{L}\right)_A = \left(\frac{2 \times 0.0011}{530} + \frac{2 \times 0.0137}{38}\right) = 0.0000042 + 0.00072 = 0.000724$$

"Reference" method: $E_T = \begin{matrix} 0.036°F \\ \text{(I-C thermocouples)} \end{matrix}$ $E_{\Delta P} = 0.0028$ in. Hg

$T = 530°F$ $P = 38$ in. Hg

$$\left(\frac{E_L}{L}\right)_R = \left(\frac{4 \times 0.036}{530} + \frac{2 \times 0.0028}{38}\right) = 0.000271 + 0.000147 = 0.000418$$

For square root of sum of squares method, one obtains:

$$\left(\frac{E_L}{L}\right)_A = \sqrt{(0.0000042)^2 + (0.000720)^2} = 0.00072 = 0.072\%$$

$$\left(\frac{E_L}{L}\right)_R = \sqrt{(0.000271)^2 + (0.000147)^2} = 0.00031 = 0.031\%$$

(Note that the latter two values are identical to the errors used in NASA document TN-D-1588 in Fig. 3.)

One would conclude then from the analysis of Ref. 4 made before the tests that the reference method would yield results more accurate than the absolute method. Hence the conclusions reached in the report do not contradict the conclusions reached in Ref. 4. Again, the reason is that determination of ΔP is subject to an order less magnitude of error than P.

The following comments are made on the results listed in the Summary of Results on p. 16:

1. This is true because the temperature variation was slight and the reference system vessel sampled well as a "gas thermometer" and had a very small lag. For some other reference system in some other test and different variations in temperature distribution this result might not necessarily be true. Therefore, either at the beginning of the list of results or after result number one, the conclusion should be limited by use of the words "in these tests" as the author says in paragraph 2 of the Introduction. (Incidentally if the temperature had not been measured for these tests, it would not have been possible to determine this result. The analytical work referred to in Result 2 refers to the question of lag only and not to sampling.)

2. The comparison is of limited value because comparable precision was not used in measuring pressure and pressure differences. Thus, the experimental substantiation is questionable.

3. The reference system error analysis has a term for error due to determining pressure difference while the absolute system error analyses has a term for error due to determining absolute pressure of the containment instead. If the latter had the same precision as the former, instead of an order of magnitude less, the contributions to the total error would be the same. The difference in the error analysis is that if one assumes no lag and no sampling error, the temperature error terms in the reference system analysis cancel each other out and an error due to determining temperature appears only in the absolute system analysis. The analysis of the lag problem found in NASA document TN-D-1731 indicates a possible error of 0.02°F due to lag in the 2-in. system. If neglected, this gives an error term about as large as the one in the absolute system analysis for thermocouples, but larger than the one in the absolute system analysis using the nickel wire. The statement should have the qualifying words "in these particular tests" added. All the error analysis really does is show that the poorer precision in determining absolute pressure makes the reference method more accurate in these tests.

4. Again, the smaller scatter is due to the order of magnitude higher precision in measuring pressure difference than in measuring total pressure.

5 and 6. Not enough emphasis is placed on the feasibility and accuracy of the nickel wire resistance thermometer. A detailed analysis of sampling error will show that the sampling error using this instrument is essentially zero and at least smaller than the instrument precision. In a cylindrical building, a wire stretched from top to bottom on the axis has zero error for extreme changes in shape of the axial temperature distribution. The results obtained with this instrument serve again to show that scatter is a result of lack of precision in determining the pressure and not the temperature.

In conclusion, the summary of results shown on p. 18 of NASA document TN-D-1731, prepared by the same author, along with results 5, 6, and 7 of NASA document TN-D-1588, (pp. 16–17), plus a statement to the

effect that "had the precision of determining containment pressure been the same as the precision of measuring the pressure difference, the scatter of results would have been the same in both methods" would make an agreeable, true, and unambiguous set of conclusions which others could use in selecting their test procedures.

Appendix F

COMPARISON OF METHODS OF DETERMINING CONTAINMENT LEAKAGE RATES AND MAXIMUM POSSIBLE ERROR ANALYSES

R. O. Brittan*

Introduction

For nearly ten years a heated dispute has been under way in which proponents of the so-called "reference" method of determining containment leakage rates contend that the method is superior to the so-called "absolute" method. As a matter of fact, both are closely related methods of observing pressure decay. The reference method is considerably more complex in preparation and execution. The same measurements must be made in both methods, plus additional measurements on the reference system itself to assure adequate temperature compensation or allow correction for thermal lag, to assure leaktightness or correct for leakage, and to assure proper hygrometry or correct for condensation. In addition, the reference system must be constructed, installed, and tested.

Historically, the reference method was conceived to eliminate the necessity of making temperature corrections by virtue of assuming equal temperatures in the leaking containment and in the nonleaking reference volume, which are coupled by a manometer. If temperatures and hygrometry (i.e., temperatures above the dewpoint and no liquid water present initially) are identical, the leakage rate of the containment is just the difference in the pressure difference between the two systems at two points in time divided by the containment test pressure. This first reference method was attempted in VBWR, which had an allowable leakage rate of the order of 1%/24-hr day. In practice, it was found that a considerable lag existed between the temperature of the air in the reference volume and the temperature of the air in the surrounding containment volume, which was varying diurnally.

Since then, considerable effort has been concentrated on attempting to reduce this lag to zero and have the reference volume distributed in a

*Argonne National Laboratory.

more representative way throughout the containment volume. At the same time, the reference method (both methods, in fact) has been employed in testing containment systems for which the leaktightness requirements have become more and more stringent, approaching allowable leakage rates of a few hundredths of a percent. For the accuracy employed in practice in reading temperatures, manometer legs, and barometers, the possible error (and even the probable error) in determining leakage rates is often much greater than the leakage rate itself. The error entailed in assuming temperature compensation alone is greater than the leakage rate. For very low leakage rates, the true rate cannot usually be proved by either method, and any small advantage which one method has over the other is lost. For either method, where leakage rates are less than 0.001/24 hr, the leak testing must become a sophisticated experiment to be adequate.

To allow an unbiased comparison of the two methods, it seems important to set on record the "exact" expressions for leakage rate which are obtained without assumptions regarding behavior of the state variables or the systems and then the expressions for the errors in leakage-rate determination which may accrue.

There are two types of error analysis available to those conducting leakage-rate tests. One deals with possible error, the other with probable error. The former is required in planning the tests and as a proof of minimum detectable leakage rate. The latter is used in assessing the credence of the test after it is performed.

The possible error analysis sets the limitation on leakage-rate determination imposed by possible errors in reading instruments or by limits of accuracy of the instrumentation. It is assumed in this analysis that every reading error or lack of builtin accuracy is in such a direction (+ or −) that the total possible error is maximum (+ or −). Comparison of this maximum with the expected or required magnitude of the quantity to be determined (leakage rate) allows determination of the precision of instrumentation needed to make the possible error a desired fraction of the leakage rate (e.g., 1/3 or 1/2).

It may be shown after a test that probability laws yield much lower errors with high confidence (e.g., 99% or 95%) under favorable conditions. This analysis may also take into account increased accuracy available

through multiple observations of a single variable. Thus, the probable leakage rate calculated may be proclaimed (with low error) with high confidence. It does not absolutely preclude the possibility of the particular test having the maximum possible error.

Herein only the possible error analysis is considered. The expressions required for determining the leakage rates and errors are developed from the basic equations governing gases for the two pressure decay methods (absolute and reference) of leakage-rate determination during pneumatic tests. Possible errors are compared for the two methods. An assessment of importance of changes in volume and in weight of water vapor, and errors in determining them, is made.

Initially only tests on containment structures under gage test pressures of the order of 1 atm or higher are considered. In tests where the gage test pressures are of the order of 1 lb/in.^{2}, different pressure measurements are usually taken (specifically, atmospheric pressure, difference between containment pressure and atmospheric, and difference between reference vessel pressure and containment pressure). Such tests are examined later, although results are found to be the same as for the reference method.

Possible Error Analysis for Absolute Method

On considering all gases present as perfect gases it is assumed that the constituents of the air, including water vapor, each and as a mixture, obey the equation of state:

$$PV = NmRT \ . \tag{1}$$

For purposes of this examination,

P = absolute pressure, psf,
V = container volume, ft^3,
T = absolute temperature, °R,
m = molecular weight of gas,
N = number of molecular weights,
R = constant for the particular gas, ft/°R.

The product mR is assumed to be the same for all gases, and Nm = w is the total weight of gas, vapor, or mixture in the container. Deviations from these assumptions require correction of the measured values only if temperature conditions initially and finally vary markedly (e.g., the ratio of the weights of air and water vapor remains constant above the dew-point temperature but increases below that temperature, if no water is present.)

In general form, the equations relating the variables for air and water vapor in the containment vessel are

$$p_a V = w_a R_a T \ , \tag{1a}$$

$$p_v V = w_v R_v T \ . \tag{1b}$$

(Note that partial pressures and weights are given in lower case letters, and that the subscripts used herein signify the following:

a ≡ air,
v ≡ water vapor,
1 ≡ initial point of measurement,
2 ≡ final point of measurement).

Since p_a is not measured but P is, and since $P = p_a + p_v$, while $w = w_a + w_v$, the equation relating the variables measured is

$$\frac{PV}{T} = w_a R_a + w_v R_v = (w - w_v)R_a + w_v R_v = wR_a + w_v\left(\frac{R_v}{R_a} - 1\right) R_a \ , \tag{1c}$$

but $R_v/R_a = m_a/m_v$, and hence

$$\frac{PV}{R_a T} = w + w_v\left(\frac{m_a}{m_v} - 1\right) \tag{1d}$$

so that

$$w = \frac{PV}{R_a T} - \left(\frac{m_a}{m_v} - 1\right) w_v \ . \tag{1e}$$

Hence at two points in time, t_1 and t_2, separated by $t_2 - t_1 = \Delta t$,

$$w_1 = \frac{P_1 V_1}{R_a T_1} - \left(\frac{m_a}{m_v} - 1\right) w_{v_1} \tag{1f}$$

and

$$w_2 = \frac{P_2 V_2}{R_a T_2} - \left(\frac{m_a}{m_v} - 1\right) w_{v_2} \quad . \tag{1g}$$

Then the change in weight of material in the containment vessel is

$$\Delta w = w_2 - w_1 - \left(\frac{P_2 V_2}{R_a T_2} - \frac{P_1 V_1}{R_a T_1}\right) - (w_{v_2} - w_{v_1}) \left(\frac{m_a}{m_v} - 1\right) \quad . \tag{2}$$

If now $P_2 = P_1 + \Delta P$, $V_2 = V_1 + \Delta V$, $T_2 = T_1 + \Delta T$, and $w_{v_2} = w_{v_1} + \Delta w_v$ [in general $\chi + \Delta\chi = \chi(1 + \Delta\chi/\chi)$] are substituted in (2), and it is noted that $T_1(1 + \Delta T/T_1)$ is approximately equal to $T_1/(1 - \Delta T/T_1)$, since $\Delta T/T_1 \ll 1$, it is found that

$$\Delta w \approx \left[\frac{P_1 V_1}{R_a T_1}\left(1 + \frac{\Delta P}{P_1}\right)\left(1 + \frac{\Delta V}{V_1}\right)\left(1 - \frac{\Delta T}{T_1}\right) - \frac{P_1 V_1}{R_a T_1}\right] - \Delta w_v \left(\frac{m_a}{m_v} - 1\right) \quad . \tag{2a}$$

However,

$$\left(1 + \frac{\Delta P}{P_1}\right)\left(1 + \frac{\Delta V}{V_1}\right)\left(1 - \frac{\Delta T}{T_1}\right) = 1 + \frac{\Delta P}{P_1} + \frac{\Delta V}{V_1} - \frac{\Delta T}{T_1}$$

if products of fractional changes (such as $\Delta P\ \Delta V/P_1 V_1$) are neglected. With this modification, Eq. (2a) becomes

$$\Delta w \approx \frac{P_1 V_1}{R T_1}\left(\frac{R}{R_a}\right)\left(\frac{\Delta P}{P_1} + \frac{\Delta V}{V_1} - \frac{\Delta T}{T_1}\right) - \Delta w_v \left(\frac{m_a}{m_v} - 1\right) \quad . \tag{2b}$$

But $R/R_a = m_a/m$ and $m = m_a \rho_a + m_v \rho_v/(\rho_a + \rho_v)$, where ρ = density, and $\rho_v/\rho_a = s$ = specific humidity, so

$$\frac{R}{R_a} = \frac{1 + s}{1 + \frac{m_v}{m_a} s} \quad .$$

Also $w_1 = P_1 V_1 / RT_1$. With these substitutions it is found that Eq. (2b) can be written

$$\frac{\Delta w}{w_1} \approx \frac{1 + s}{1 + \frac{m_v}{m_a} s} \left(\frac{\Delta P}{P_1} + \frac{\Delta V}{V_1} - \frac{\Delta T}{T_1} \right) - \frac{\Delta w_v}{w_1} \left(\frac{m_a}{m_v} - 1 \right) . \tag{2c}$$

The fraction of material leaking out in the time interval Δt (in hr) can be obtained by subtracting the fraction of water vapor which condenses (in the containment) from both sides. Furthermore, by multiplying both sides by $24/\Delta t$, this leakage rate can be extrapolated to that for 24 hr. If these operations are performed, it is found that the 24-hr leakage rate for the absolute method is

$$L_A \approx \frac{24}{\Delta T} \frac{\Delta w - \Delta w_{v_c}}{w_1} = \frac{24}{\Delta t} \left[\frac{1 + s}{1 + \frac{m_v}{m_a} s} \left(\frac{\Delta P}{P_1} + \frac{\Delta V}{V_1} - \frac{\Delta T}{T_1} \right) - \frac{\Delta w_v}{w_1} \left(\frac{m_a}{m_v} - 1 \right) - \frac{\Delta w_{v_c}}{w_1} \right] . \tag{3}$$

If the temperature stays above the dewpoint throughout the test, $\Delta w_{v_c} = 0$ and $\Delta w_v \approx \Delta w[s/(s + 1)]$, and the 24-hr leakago rate becomes

$$L_A' \approx \frac{24}{\Delta t} \left[\frac{(1 + s)^2}{\left(1 + \frac{m_v}{m_a} s\right)\left(1 + \frac{m_a}{m_v}\right) s} \right] \left(\frac{\Delta P}{P_1} + \frac{\Delta V}{V_1} - \frac{\Delta T}{T_1} \right) . \tag{3a}$$

Note that the bracketed term in Eq. (3a) is always in the range $0.99 < [\quad] < 1.00$ and hence can be taken as approximately 1 with less than 1% error in L_A'. Thus

$$L_A'' \approx \frac{24}{\Delta T} \left(\frac{\Delta P}{P_1} + \frac{\Delta V}{V_1} - \frac{\Delta T}{T_1} \right) . \tag{3b}$$

It will be shown that $\Delta V/V$ is less than 0.0001, generally, and usually may be deleted in determining the leakage rate.

To determine the effects of errors in reading instruments or of lack of instrument precision it may be assumed that each measurement has an error E of either sign associated with it. Thus the true values are:

$$T_1' = T_1 \pm E_t, \qquad P_1' = P_1 \pm E_p, \qquad w_v' = w_v \pm E_{w_v}, \qquad \text{etc.}$$

If these expressions for the measured variables are substituted in Eq. (3) for the differences ΔP, ΔT, etc.,

$$(L_A)_E \approx \frac{24}{\Delta t}\left[\frac{1+s}{1+\frac{m_v}{m_a}s}\left(\frac{P_2 \pm E_p - P_1 \pm E_p}{P_1} + \frac{V_2 \pm E_v - V_1 \pm E_v}{V_1} - \frac{T_2 \pm E_T - T_1 \pm E_T}{T_1}\right)\right.$$

$$\left. - \frac{w_{v_2} \pm E_{w_v} - w_{v_1} \pm E_{w_v}}{w_1}\left(\frac{m_a}{m_v} - 1\right) - \frac{w_{v_{c_2}} \pm E_{w_{v_c}} - w_{v_{c_1}} \pm E_{w_{v_c}}}{w_1}\right] \qquad (3c)$$

or

$$(L_A)_E \approx \frac{24}{\Delta t}\left[\frac{1+s}{1+\frac{m_v}{m_a}s}\left(\frac{\Delta P + 2E_p}{P_1} + \frac{\Delta V + 2E_v}{V_1} - \frac{\Delta T \pm 2E_T}{T_1}\right)\right.$$

$$\left. - \frac{\Delta w_v \pm 2E_{w_v}}{w_1}\left(\frac{m_a}{m_v} - 1\right) - \frac{\Delta w_{v_c} \pm 2E_{w_{v_c}}}{w_1}\right]. \qquad (3d)$$

Then the maximum possible error in L_A is $(L_A)_E - L_A$, with all errors additive:

$$E_{L_A} \approx (L_A)_E - L_A \approx \frac{24}{\Delta t}\left[\left(\frac{2E_p}{P_1} + \frac{2E_T}{T_1} + \frac{2E_V}{V_1}\right) + \frac{2E_{w_v}}{w_1}(0.6) + \frac{2E_{w_{v_c}}}{w_1}\right]. \qquad (4)$$

(Note that $(m_a/m_v - 1) = 0.608$ and $(1 + s)/[1 + (m_v/m_a)s] \approx 1$.)

It will be shown that fractional errors in determining hygrometry and volume changes are small compared with fractional errors in determining pressures and temperatures and may be ignored for values of $L_A > 0.0001$. Hence the significant error fraction can be written

$$E'_{L_A} \approx \frac{24}{\Delta t}\left(\frac{2E_p}{P_1} + \frac{2E_T}{T_1}\right). \tag{4a}$$

Possible Error Analysis for Reference Method

In the reference method the same measurements should be taken as in the absolute method, plus measurements of

δP = pressure difference between reference system and containment vessel = $P_R - P$,

T_R = temperature of contents of reference system,

P_R = pressure in reference system,

T_{R_W} = wet bulb temperature of reference system, or

r_R = relative humidity of reference system.

(From the T_R and T_{R_W} or T_R and r_R, w_{R_v} can be computed.)

The governing equations for the containment and reference systems are

1. containment

$$\begin{aligned} p_a V &= w_a R_a T \\ p_v V &= w_v R_v T \\ PV &= wRT \end{aligned} \tag{1}$$

2. reference

$$\begin{aligned} p_{R_a} V_R &= w_{R_a} R_a T_R \\ p_{R_v} V_R &= w_{R_v} R_v T_R \\ P_R V_R &= w_R R T_R \end{aligned} \tag{5}$$

The fractional weight change in the containment is still as given by Eq. (2c). It is only necessary to replace ΔP with a term containing the measured values. This is done by noting that

$$P = P_R - \delta P$$

so that

$$P_1 = P_{R_1} - \delta P_1$$

and

$$P_2 = P_{R_2} - \delta P_2 \ .$$

Then

$$\Delta P = P_2 - P_1 = \left(P_{R_2} - P_{R_1}\right) - \left(\delta P_2 - \delta P_1\right) \ . \tag{6}$$

If P_{R_2} is replaced by $w_{R_2} T_{R_2} R/V_{R_2}$ and P_{R_1} by $w_{R_1} T_{R_1} R/V_{R_1}$ as given in Eq. (5), and if

$$w_{R_2} = w_{R_1} (1 + \Delta w_R/w_{R_1}) \ ,$$

$$T_{R_2} = T_{R_1} (1 + \Delta T_R/T_{R_1}) \ ,$$

and

$$V_{R_2} = V_{R_1} (1 + \Delta V_R/V_{R_1}) \approx V_{R_1}/(1 - \Delta V_R/V_{R_1}) \ ,$$

then

$$P_{R_2} - P_{R_1} = \frac{w_{R_1} T_{R_1} R}{V_{R_1}} \left(1 + \frac{\Delta w_R}{w_{R_1}}\right)\left(1 + \frac{\Delta T_R}{T_{R_1}}\right)\left(1 - \frac{\Delta V_R}{V_{R_1}}\right) - \frac{w_{R_1} T_{R_1} R}{V_{R_1}}$$

$$= \frac{w_{R_1} R T_{R_1}}{V_{R_1}} \left(\frac{\Delta w_R}{w_{R_1}} + \frac{\Delta T_R}{T_{R_1}} - \frac{\Delta V_R}{V_{R_1}}\right) , \tag{7}$$

neglecting products of fractional changes. If this is substituted into Eq. (6) and then divided by P_1,

$$\frac{\Delta P}{P_1} = \frac{P_{R_1}}{P_1}\left(\frac{\Delta w_R}{w_{R_1}} + \frac{\Delta T_R}{T_{R_1}} - \frac{\Delta V_R}{V_{R_1}}\right) - \frac{(\delta P_2 - \delta P_1)}{P_1} \ . \tag{8}$$

Noting that

$$\frac{P_{R_1}}{P_1} = \left(\frac{P_1 + \delta P_1}{P_1}\right) = \left(1 + \frac{\delta P_1}{P_1}\right)$$

and again neglecting products of fractional changes, Eq. (8) becomes

$$\frac{\Delta P}{P_1} = \left(\frac{\Delta w_R}{w_{R_1}} + \frac{\Delta T_R}{T_{R_1}} - \frac{\Delta V_R}{V_{R_1}}\right) - \left(\frac{\delta P_2 - \delta P_1}{P_1}\right) \quad . \tag{8a}$$

If Eq. (8) is substituted into Eq. (3), the leakage rate per 24 hr is obtained directly for the reference method:

$$L_R = \frac{24}{\Delta t}\left\{\frac{1 + s}{1 + \frac{m_v}{m_a} s}\left[\left(\frac{\Delta T_R}{T_{R_1}} - \frac{\Delta T}{T_1}\right) - \left(\frac{\Delta V_R}{V_{R_1}} - \frac{\Delta V}{V_1}\right) - \frac{\delta P_2 - \delta P_1}{P_1} + \frac{\Delta w_R}{w_{R_1}}\right] - \frac{\Delta w_v}{w_1}\left(\frac{m_a}{m_v} - 1\right) - \frac{\Delta w_{v_c}}{w_1}\right\} . \tag{9}$$

Again, if both T and T_R stay above the dewpoint and the reference system does not leak ($\Delta w_R = 0$, $\Delta w_{v_c} = 0$), and since $\Delta w_v = \Delta w\ [s/(s + 1)]$,

$$L_R' = \frac{24}{\Delta t}\left[\frac{(1 + s)^2}{\left(1 + \frac{m_v}{m_a} s\right)\left(1 + \frac{m_a}{m_v} s\right)}\right]\left[\left(\frac{\Delta T_R}{T_{R_1}} - \frac{\Delta T}{T_1}\right) - \left(\frac{\Delta V_R}{V_{R_1}} - \frac{\Delta V}{V_1}\right) - \left(\frac{\delta P_2 - \delta P_1}{P_1}\right)\right] . \tag{9a}$$

Then, since $0.99 < [f(s)] < 1.00$ for the bracketed term in s,

$$L_R'' = \frac{24}{\Delta t}\left[\left(\frac{\Delta T_R}{T_{R_1}} - \frac{\Delta T}{T_1}\right) - \left(\frac{\Delta V_R}{V_{R_1}} - \frac{\Delta V}{V_1}\right) - \left(\frac{\delta P_2 - \delta P_1}{P_1}\right)\right] . \tag{9b}$$

The following comments are now pertinent:

1. Only now can the effect of the assumption that $T_{R_1} = T_1$ and $T_{R_2} = T_2$ be assessed. <u>If</u> this were true, $\Delta T_R/T_1$ would cancel $\Delta T_1/T_1$ and the <u>apparent</u> leakage would not include either term. However, T_R must be measured to prove this, and hence an error can be introduced. In general, such an assumption is not true because of a real thermal lag between reference and containment system.

2. If the temperatures of the reference and containment systems always stay above the dewpoint, $\Delta w_{R_{v_c}} = \Delta w_{v_c} = 0$, and the last two fractional change terms drop out.

3. The above points serve to show where other possible error analyses may go wrong.

To determine the maximum possible error in L_R due to reading errors and lack of instrument precision, the same procedure is adopted as used to obtain the error in L_A. Expressions like $T_1 \pm E_T$ are substituted in Eq. (9) to yield $(L_R)_E$. Then E_{L_R} is obtained by subtracting L_R from $(L_R)_E$:

$$(L_R)_E - L_R = \frac{24}{\Delta t}\left[\frac{1+s}{1+\frac{m_v}{m_a}s}\left(\frac{2E_{T_R}}{T_{R_1}} + \frac{2E_T}{T_1} + \frac{E_{\delta_P} + E_{\delta_P}}{P_1} + \frac{2E_{V_R}}{V_{R_1}} + \frac{2E_V}{V_1} + \frac{2E_{W_R}}{w_{R_1}}\right) + \frac{2E_{w_v}}{w_1}\left(\frac{m_a}{m_v} - 1\right) + \frac{2E_{w_{v_c}}}{w_1}\right] . \quad (10)$$

Again, letting $(1 + s)/[1 + (m_v/m_a)s] = 1$ and $m_a/m_v - 1 = 0.608$, and noting that usually $E_{T_R} = E_T$

$$E_{L_R} = (L_R)_E - L_R = \frac{24}{\Delta t}\left[\frac{4E_T}{T} + \frac{2E_{\delta_P}}{P} + \frac{2E_{V_R}}{V_R} + \frac{2E_V}{V} + \frac{2E_{w_R}}{w_R} + \frac{2E_{w_v}}{w_1}(0.6) + \frac{3E_{w_{v_c}}}{w_1}\right] . \quad (10a)$$

Since errors in determining ΔV, ΔV_R, w_R, Δw_v, and Δw_{v_c} will be shown to be small compared with errors in determining ΔT and δP, and since a double error $(2E_H)$ is made in reading manometer leg heights to obtain δP, so that $E_{\delta_P} = 2(\mu E_H)$, where μ converts heights to units of P,

$$E'_{L_R} \approx \frac{24}{\Delta t}\left(\frac{4\mu E_H}{P} + \frac{4E_T}{T}\right) . \quad (10b)$$

(Note, in previous analyses it was not recognized that in determining δP a double error can be made because <u>each</u> leg of the manometer must be read. If another single-reading type of pressure differential measuring device is used, the coefficient of the first error component can be reduced from 4 to 2.)

Possible Error Analysis for Low-Pressure Reference Method

If low test overpressures are employed (of the order of 1 psi) a different set of measurements is sometimes taken. For pressure, the measurements are

1. outside atmospheric pressure,
2. pressure difference between containment and outside,
3. pressure difference between reference system and containment.

Measurements 2 and 3 are usually made with two-legged manometers (two readings each per measurement), and 1 is made with a mercury barometer. For temperature, the measurements are

1. outside temperature,
2. containment temperature,
3. reference system temperature,
4. wet-bulb temperature in containment, or relative humidity,
5. wet-bulb temperature in reference system, or relative humidity.

Measurement 5 should be taken but sometimes is not. It is necessary to take measurements 4 and 5 either to show that the temperature is above the dew-point or to determine the required correction for change in weight of water vapor. Measurement 1 must be taken at least to correct the barometer reading.

If P_B = outside air barometer reading, H_H and H_L are the high and low manometer leg heights, respectively, and μ converts manometer heights to pressure in same units as P, using the perfect gas law assumptions, the equations for this system become

$$P = P_B + \mu(H_H - H_L) = \frac{wRT}{V}$$

$$P_R = P + \mu(H_{R_H} - H_{R_L}) = P_B + \mu(H_H - H_L) + \mu(H_{R_H} - H_{R_L}) = \frac{w_R R T_R}{V_R} . \tag{11}$$

The expression for the fractional weight loss in the containment vessel is the same as for the other reference method, with

$$\delta P = \mu(H_{R_H} - H_{R_L}) . \tag{12}$$

The quantity P does not enter into the determination of changes in pressure, and hence measurements required for P do not introduce errors in L_R. The leakage rate per 24 hr for this low-pressure reference method can therefore be written by substituting Eqs. (11) and (12) in Eq. (9):

$$L_{R_L} = \frac{24}{\Delta t}\left\{\frac{1+s}{1+\frac{m_v}{m_a}s}\left[\left(\frac{\Delta T_R}{T_{R_1}} - \frac{\Delta T}{T_1}\right) - \left(\frac{\Delta V_R}{V_{R_1}} - \frac{\Delta V}{V_1}\right) - \frac{\mu\left(H_{R_{H_2}} - H_{R_{L_2}} - H_{R_{H_1}} - H_{R_{L_1}}\right)}{P_{B_1} + \mu\left(H_{H_1} - H_{L_1}\right)} + \frac{\Delta w_R}{w_{R_1}}\right] - \frac{\Delta w_v}{w_1}\left(\frac{m_a}{m_v} - 1\right) - \frac{\Delta w_{v_c}}{w_1}\right\}. \quad (13)$$

If both T and T_R stay above the dewpoint and the reference system does not leak ($\Delta w_R = 0$, $\Delta w_{v_c} = 0$), Eq. (13) can be reduced to an expression analogous to Eq. (9b):

$$L''_{R_L} = \frac{24}{\Delta t}\left[\left(\frac{\Delta T_R}{T_{R_1}} - \frac{\Delta T}{T_1}\right) - \left(\frac{\Delta V_R}{V_{R_1}} - \frac{\Delta V}{V_1}\right) - \frac{\mu\left(\Delta H_{R_2} - \Delta H_{R_1}\right)}{P_{B_1} + \mu\Delta H_1}\right]. \quad (13a)$$

The possible error analysis can be made analogous to the reference method error analysis if errors in determining volume change and water vapor change are neglected:

$$E_{L_{R_L}} = \frac{24}{\Delta t}\left[\pm\frac{2E_{T_R}}{T_{R_1}} \pm \frac{2E_T}{T_1} \pm \frac{4\mu E_{H_R}}{P_{B_1} + \mu\Delta H_1}\right]$$

$$= \frac{24}{\Delta t}\left(\frac{4\left|E_T\right|}{T_1} + \frac{4\mu\left|E_{H_R}\right|}{P_{B_L} + \mu\Delta H_1}\right), \quad (14)$$

if

$$\left|E_{T_R}\right| = \left|E_T\right| .$$

The complete error fraction, if condensation occurs, can be written

$$E'_{L_{R_L}} = \frac{24}{\Delta t}\left(\frac{4E_T}{T_1} + \frac{4\mu E_H}{P_1} + \frac{E_{\Delta V}}{V_1} + \frac{E_{\Delta V_R}}{V_{R_1}} + \frac{E_{\Delta w_{R_v}}}{w_{R_1}} + \frac{E_{\Delta w_v}}{w_1}\right) . \qquad (14a)$$

Hygrometry Corrections

In order to examine the importance of errors in hygrometry, it is necessary to get an estimate of the quantities $E_{\Delta w_{R_v}}/w_R$ and $E_{\Delta w_v}/w_1$ in terms of errors in reading the wet and dry bulb temperatures. To do this, it is first noted that a relation between P_v and T_d exists in the normal temperature range which is (noting that this is only for the case of saturated or subcooled conditions; i.e., below the dewpoint temperature)

$$\log P_v = a + b(T_d - 459.69) .$$

If T_d is in °R and lies in the range $500°R < T_a < 540°R$, and if P_v is in inches of mercury, a = 0.345, b = 0.0347, and

$$\frac{dp_v}{p_v} = 0.0347\ dT_d ,$$

then

$$p_{v_2} = p_{v_1} + \Delta p_v = p_{v_1}\ (1 + \Delta p_v/p_{v_1}) = p_{v_1}\ (1 + 0.0347\ \Delta T_d) .$$

Since, in general,

$$p_v = \frac{w_v R_v T_d}{V} ,$$

it follows that

$$\frac{w_{v_2} R_v T_{d_2}}{V_2} = \frac{w_{v_1} R_v T_{d_1}}{V_1}\ (1 + 0.0347\ \Delta T_d) ,$$

from which

$$\frac{w_{v_2} - w_{v_1}}{w_{v_1}} = \frac{\Delta w_v}{w_{v_1}} = \frac{T_{d_1} V_2}{T_{d_2} V_1}\ (1 + 0.0347\ \Delta T_d) - 1 .$$

If it is assumed that $\Delta V = 0$, and since

$$\frac{T_{d_1}}{T_{d_2}} = 1 - \frac{\Delta T_d}{T_{d_1}} ,$$

$$\frac{\Delta w_v}{w_{v_1}} = \Delta T_d \ (0.0347 - 1/T_{d_1}) \cong 0.033 \ \Delta T_d$$

(for T_{d_1} of the order of 500°R), also

$$w_{v_1} = \frac{s}{s + 1} w_1 .$$

Therefore

$$\frac{\Delta w_v}{w_1} = \frac{s}{s + 1} (0.033 \ \Delta T_{d_1}) ,$$

and since s is always less than 0.02,

$$\frac{\Delta w_v}{w_1} < 0.00066 \ \Delta T_d .$$

Thus if the maximum possible error in determining $\Delta T_d = 1°$, the maximum possible error in $\Delta w_v/w_1$ is 0.00066, etc. Since the maximum allowable error in determining ΔT_d is prescribed by the leakage rate to be measured and must be less than $62.5L_R$ to give at least 50% accuracy, $E_{\Delta w_v}/w_1$ is always less than about $0.04L_R$.

Volume Corrections

To examine the importance of errors in determining $\Delta V/V$ and $\Delta V_R/V_R$, it is necessary to estimate the relations between $\Delta V/V$, $\Delta T/T$, and $\Delta P/P$ and errors in temperature and pressure measurement. The volumes of the containment vessel and reference vessels change as the material temperatures and internal pressures change. In general

$$V_2 = V_1 (1 + 3\alpha \ \Delta T + \beta \ \Delta P) ,$$

where α is the linear temperature coefficient of expansion of the vessel material and β is the pressure coefficient of expansion. For spherical vessels,

$$\beta_s = \frac{3\underline{r}_s}{2\epsilon_s h} ,$$

where

$\underline{r}_s$ = sphere radius,
h = wall thickness,
ϵ_s = elastic modulus of sphere material.

For tubes or cylinders

$$\beta_c = \frac{5\underline{r}_c}{2\epsilon_c h} ,$$

where

$\underline{r}_c$ = cylinder or tube radius,
ϵ_c = elastic modulus of tube or cylinder material.

Since

$$\frac{\Delta V}{V_1} = 3\alpha\ \Delta T + \beta\ \Delta P$$

and

$$\left(\frac{\Delta V}{V_1}\right)_E = 3\alpha(\Delta T + 2E_T) + \beta(\Delta P + 2E_{\Delta P}) ,$$

$$\frac{E_{\Delta V}}{V_1} = 6\alpha E_T + 2\beta E_{\Delta P} = \left(\frac{\Delta V}{V_1}\right)_E - \left(\frac{\Delta V}{V_1}\right) .$$

where E = error. For steel, $\alpha \sim 10^{-5}/°F$ and $\epsilon \sim 3 \times 10^7$ psi; for copper, $\alpha \sim 10^{-5}/°F$ and $\epsilon \sim 1.6 \times 10^7$ psi.

If, typically, $\underline{r}_s/h \sim 1000$ and $\underline{r}_c/h \sim 25$, and the containment is of steel and the reference system is of copper,

$$\frac{E_{\Delta V}}{V_1} \sim 6 \times 10^{-5}\ E_T + 10 \times 10^{-5}\ E_p$$

and

$$\frac{E_{\Delta v_R}}{V_R} = 6 \times 10^{-5}\ E_{T_R} + 0.8 \times 10^{-5}\ E_{p_R}\ .$$

E_T is constrained to be less than approximately 60L and E_p is less than 4aL to insure that E_{L_R} is less than L/2. Hence $E_{\Delta V}/V_1$ will always be less than 0.004L for 1 atm overpressure (a = 2). Similarly E_{T_R} must always be less than 30L and E_p less than 2aL. Hence $E_{\Delta V}/V_1$ will always be less than 0.002L for 1 atm overpressure (a = 2).

The magnitude of $\Delta V/V$ itself is small. It can be seen that for this example

$$\frac{\Delta V}{V} = 6 \times 10^{-5}\ \Delta T + 10 \times 10^{-5}\ \Delta P\ .$$

Hence $\Delta V/V$ will always be less than L/2 if $\Delta T < 4000L$ (°R) and $\Delta P < 2500L$ (in. Hg). Hence for L = 0.001, if $\Delta T < 4°R$ and $\Delta P < 2.5$ in. Hg, $\Delta V/V$ will be less than 0.0005. Thus an error in determining $\Delta V/V$ is certainly negligible.

Required Precision

It was noted earlier that the magnitudes of possible errors can be used to determine the precision required in measuring the temperature and pressure before the test. This information can then be used to select adequate instrumentation for the test. Equations (4a) and (10b) for the possible errors can be utilized to obtain the maximum sizes of errors in measurement which can be tolerated without having the error in leakage-rate determination be greater than a desired fraction of the expected leakage rate itself.

Let

$$\phi = \frac{\text{Fractional error in leakage rate due to pressure errors}}{\text{Maximum allowable fractional leakage rate}}\ , \qquad (15)$$

or, from Eqs. (4a) and (10b),

$$\phi_A = \frac{24}{\Delta t}\,\frac{2E_p}{aP_o L}\,,$$

$$\phi_R = \frac{24}{\Delta t}\,\frac{4\mu E_H}{aP_o L}$$

and

$$\theta = \frac{\text{Fractional error in leakage rate due to temperature errors}}{\text{Maximum allowable fractional leakage rate}}\,, \qquad (16)$$

or, from Eqs. (4a) and (10b),

$$\theta_A = \frac{24}{\Delta t}\,\frac{2E_T}{TL}\,,$$

$$\theta_R = \frac{24}{\Delta t}\,\frac{4E_T}{TL}\,.$$

Also,

$$\lambda = \frac{\text{Total maximum desired fractional error in leakage rate}}{\text{Maximum allowable fractional leakage rate}}\,,$$

or, from Eqs. (4a) and (10b),

$$\lambda_A = \frac{48/\Delta t}{L}\left(\frac{E_p}{aP_o} + \frac{ET}{T}\right),$$

$$\lambda_R = \frac{96/\Delta t}{L}\left(\frac{E_H}{aP_o} + \frac{E_T}{T}\right). \qquad (17)$$

Also

$$\lambda = \phi + \theta\,. \qquad (18)$$

In Eqs. (15), (16), and (17), A and R refer to absolute and reference methods, respectively, L is the specified maximum allowable fractional leakage rate, P_o is atmospheric pressure, and a is the absolute test pressure in atmospheres.

Then, for the absolute method, from (15), (16), and (18), E_P must be $\leq (\Delta t/48)\, aP_o L\phi_A$, E_T must be $\leq (\Delta t/48)\, TL\theta_A$, and $\phi_A + \theta_A \leq \lambda_A$; while for the reference method, from (15), (16), and (18), E_H must be $\leq (\Delta t/96)\, aP_o L\phi_R/\mu$, E_T must be $\leq (\Delta t/96)\, TL\theta_R$, and $\phi_R + \theta_R \leq \lambda_R$. These required

precisions can be evaluated for $a = 2$, $P_o = 30$ in. Hg, $T = 530°R$, $\mu = 1/13.6$, $\phi = \theta = 0.25$, $\lambda = 0.50$, and $\Delta t = 24$ hr, for various values of L. The resulting minimum precisions required in reading pressure and temperature measuring devices are listed in Table F.1.

Table F.1. Minimum Precision Required in Leakage-Rate Tests

L, Maximum Allowable Fractional Leakage Rate in 24 hr	E, Minimum Precision Required			
	Absolute Method		Reference Method	
	E_p (in. Hg)	E_T (°R)	E_H (in. H_2O)	E_T (°R)
0.05	0.38	3.3	2.6	1.7
0.01	0.075	0.67	0.51	0.33
0.005	0.038	0.33	0.26	0.17
0.001	0.0075	0.067	0.051	0.033
0.0005	0.0038	0.033	0.026	0.017
0.0001	0.00075	0.0067	0.005	0.0033

These precisions would insure that the possible error in determining leakage rate is less than 50%. For other values of a, T, μ, ϕ, θ, or Δt, the values in the table above must be multiplied by $a/2$, $T/530$, $1/13.6\mu$, 4ϕ, 4θ, or $\Delta t/24$, respectively. If these minimum precisions are realized, errors due to determining the change in weight of water vapor and the change in volume may always be neglected. Error due to the former is always less than 0.04L and to the latter always less than 0.01L.

Summary

The leakage rates have been determined in terms of the measured variables for the cases of I, absolute method; II, reference method; and III, low overpressure reference method. All of these methods are based on pressure decay and determine the fractional loss of weight of the air and water vapor mixtures by leakage from the system. The differences lie in the methods of measuring the equation-of-state variables (pressure, temperature, and volume) for assumed application of the perfect gas laws.

The exact expressions for these 24-hr leakage rates are (with products of fractional changes neglected)

$$\text{I.} \qquad L_A = \frac{24}{\Delta t}\left[\frac{1+s}{1+\frac{m_v}{m_a}s}\left(\frac{\Delta P}{P_1}+\frac{\Delta V}{V_1}-\frac{\Delta T}{T_1}\right)-\frac{\Delta w_v}{w_1}\left(\frac{m_a}{m_v}-1\right)-\frac{\Delta w_{v_c}}{w_1}\right], \qquad (3)$$

$$\text{II.} \qquad L_R = \frac{24}{\Delta t}\left\{\frac{1+s}{1+\frac{m_v}{m_a}s}\left[\left(\frac{\Delta T_R}{T_{R_1}}-\frac{\Delta T}{T_1}\right)-\left(\frac{\Delta V_R}{V_{R_1}}-\frac{\Delta V}{V_1}\right)-\left(\frac{\delta P_2-\delta P_1}{P_1}\right)+\frac{\Delta w_R}{w_{R_1}}\right]\right.$$
$$\left.-\frac{\Delta w_v}{w_1}\left(\frac{m_a}{m_v}-1\right)-\frac{\Delta w_{v_c}}{w_1}\right\}, \qquad (9)$$

$$\text{III.} \qquad L_{R_L} = \frac{24}{\Delta t}\left\{\frac{1+s}{1+\frac{m_v}{m_a}s}\left[\left(\frac{\Delta T_R}{T_{R_1}}-\frac{\Delta T}{T_1}\right)-\left(\frac{\Delta V_R}{V_{R_1}}-\frac{\Delta V}{V_1}\right)-\frac{\mu\left(\Delta H_{R_2}-\Delta H_{R_1}\right)}{P_{B_1}+\mu\Delta H_1}\right.\right.$$
$$\left.\left.+\frac{\Delta w_R}{w_{R_1}}\right]-\frac{\Delta w_v}{w_1}\left(\frac{m_a}{m_v}-1\right)-\frac{\Delta w_{v_c}}{w_1}\right\}. \qquad (13)$$

It has been shown that errors in determining Δw_v and ΔV are negligible, as is $\Delta V/V$ itself, in determining the leakage for fractional leakages greater than 0.0001. It is noted that the expressions for L_R and L_{R_L} are identical, since

$$\delta P_2 - \delta P_1 = \mu(\Delta H_{R_2} - \Delta H_{R_1})$$

and

$$P_1 = P_{B_1} + \mu(\Delta H_1) .$$

In fact, the pressure measurements are the same for δP and ΔH_R, although an additional set of measurements is required to obtain P_1 in III.

It is noted that the temperature terms in II and III cancel only if the reference system and containment system temperatures are <u>exactly</u> equal. This is not true in general because of thermal lag. Hence it is necessary to measure reference vessel air temperatures. This is usually not done and the temperature terms are dropped. If $\Delta T_R'/T_{R_1}$ is different from $\Delta T/T_1$

by $\Delta t/24L$, a 100% error is introduced immediately by assuming equal temperatures. If the readings are taken 24 hr apart and the leakage fraction is 0.001, the temperature differences must agree to within approximately 0.5°F to keep the error below 100%.

If the low-density liquid manometers can be read to the same linear precision as the mercury barometer, the accuracy in pressure difference measurement in the reference method is $1/2\ \rho_B/\rho_m$ times greater than in the absolute method (ρ_B is density of barometer fluid and ρ_m is density of manometer fluid). For a mercury barometer and a water manometer this factor would be approximately 6.8.

For all methods, if the temperatures are kept above the dewpoint, no correction is necessary for hygrometry in the three methods, since no condensation occurs and the values of $s = p_v/p_a$ is a constant throughout the test <u>if additional water is not available for evaporation</u>. If the temperatures fall below the dewpoint, the quantity of water vapor leaking out with air or condensing must be accounted for continuously throughout the test, since s is not constant. The same is true if liquid water is present and available for evaporation.

With these expressions for leakage rate it is shown that the maximum possible fractional errors, E_L, in determining these leakage rates, due to reading errors or lack of instrument precision, are given by the following:

I. $$E_{L_A} = \frac{24}{\Delta t}\left[\left(\frac{2E_p}{P} + \frac{2E_T}{T} + \frac{2E_V}{V}\right) + \frac{2E_{w_v}}{w}(0.6) + \frac{2E_{w_{v_c}}}{w}\right],$$

II. $$E_{L_R} = \frac{24}{\Delta t}\left[\frac{4\mu E_H}{P} + \frac{4E_T}{T} + \frac{2E_{V_R}}{V_R} + \frac{2E_V}{V} + \frac{2E_{w_R}}{w_R} + \frac{2E_{w_v}}{w}(0.6) + \frac{2E_{w_{v_c}}}{w}\right],$$

III. $$E_{L_{R_L}} = E_{L_R}.$$

Only the first two error terms are important in I, II, or III. By introducing $a = P_1/P_B$ = pressure in container in atmospheres and assuming T = 520°R, these two expressions can be rewritten and the maximum possible percent error in the 24-hr fractional leakage rate (assuming Δt = 24 hr) can be displayed graphically. Here it will be assumed that $\mu E_H = (1/13.6)\ E_p$ (i.e., the same precision in linear measurement). Thus

$$\% \text{ error in } L_A = \frac{100}{L_A} E_{L_A} = \left(0.39 + 6.7 \frac{|E_p|}{|E_T|} a\right) \frac{|E_T|}{L_A} ,$$

and

$$\% \text{ error in } L_R = \frac{100}{L_R} E_{L_R} = \left(0.77 + \frac{|E_H|}{|E_T|} a\right) \frac{|E_T|}{L_R} ,$$

where

E_H = inches of water error for each leg of manometer,
E_p = inches of mercury error,
E_T = degrees Rankine error,
L = fractional leakage rate.

The percent errors in L for $\Delta t = 24$ hr and $E_T/L = 1$ for both the methods are displayed in Fig. 1.* To obtain percent error for other values of Δt and E_T/L, values from the curve must be multiplied by $24/\Delta t$ and E_T/L. It can be noted that for the same precision of linear measurements, the reference method gives smaller percent error in L for values of $E_p/aE_T >$ 0.067 and larger percent error for values of $E_p/aE_T < 0.067$.

As an example, suppose that the leakage rate is 0.001 for 24 hr, and that Δt is 12 hr. Then if E_p and E_H = 0.1 in. of Hg and H_2O, respectively, $E_T = 0.1°R$, and a = 2,

$$\frac{E_H}{aE_T} = \frac{E_p}{aE_T} = 0.5$$

and

$$\frac{E_T}{L} = 100 .$$

Then the absolute method yields <u>3.74 × 100 × 2 = 748% error</u> in L and the reference method yields <u>1.27 × 100 × 2 = 254% error</u> in L.

If the precision of measuring E_{δ_p} and E_p were increased to 0.01 in. $E_H/aE_T = E_p/aE_T = 0.05$. For this case, the absolute method yields 0.73 × 100 × 2 = <u>145% error</u>, whereas the reference method yields 0.82 × 100 × 2 = <u>164% error</u>.

---

*See Fig. 3.3, in Chapter 3.

Appendix G

CVTR IN-PLANT TEST PROGRAM

An in-plant testing program to be conducted on the Carolinas-Virginia Tube Reactor (CVTR) was proposed to the AEC and initiated by Phillips Petroleum Company (Plant Applications and Engineering Tests Branch), with participation by Carolinas-Virginia Nuclear Power Associates, Inc., the operators of the reactor. The program, almost all of which is pertinent to containment systems testing, is divided into two phases. The first phase was conducted as part of CVTR's power demonstration program during the course of normal reactor operation. The second phase, involving special high-risk tests, will be carried out after final shutdown of the reactor.

1. Phase I – Preliminary Testing Program

Two of the three tasks under phase I are pertinent to containment systems testing: (1) evaluation of existing operating data and (2) preliminary continuous leakage-rate tests.[88*] Both tasks have now been completed by CVTR, and the data compilations and test results are being evaluated. These tasks are described below.

1.1 Evaluation of Existing Operating Data

1.1.1 Purpose

The purpose of this task was to determine the usefulness of CVTR's standard operating information in evaluating the performance and reliability of engineered safety systems. Considerable test, inspection, and operating history data were taken primarily to assure operability of the various systems and components and to provide reference for their proper maintenance. These data are considered to be reasonably typical of the type of information normally recorded by power reactor operators. The information obtained from review and evaluation of these data will be related to the Reliability Monitoring Program Study being conducted by

*See Reference Section at end of text.

Holmes & Narver, Inc., under subcontract to Phillips, and will aid in the development of this program. The data review will also be useful in determining what other information should be routinely recorded by power reactor operators in support of safety evaluations and whether differences exist between the designed and actual operation of engineered safety features.

1.1.2 Procedure

A review was made of existing data on engineered safety systems and components, including those related to the containment system, such as the vapor container, ventilation system, isolation valves, etc. These data are available in the form of operating and maintenance log books, work orders, daily records of instrument-electrical activities, equipment card files, check sheets from scheduled tests, and unusual incident reports. This information will be examined for data concerning the frequency and type of component and system failures and their causes and effects; the number of times a safety system has been tested or required to operate, why it operated, and the results; any difference between the design performance and the actual operation of an engineered safety system; and the causes and effects of any unusual incidents and/or emergency situations. In addition, any information on these incidents will be examined for pertinence in evaluating engineered safety systems.

The data review was initiated in May 1967. Holmes & Narver, Inc., is under subcontract to Phillips for this task and for relating the data to the Reliability Monitoring Program Study. The review will cover the entire CVTR operating history from prestartup checks to final shutdown.

1.2 Preliminary Continuous Leakage-Rate Tests

Due to an unscheduled power shutdown of the CVTR because of fuel failure, only limited continuous leakage-rate testing was performed. The additional pressure and humidity instrumentation originally planned for use in phase I (mentioned below) will not be installed until equipment is readied for the phase II integrated leakage-rate tests.

1.2.1 Purpose

The purpose of this task is to obtain data to help determine the accuracy and sensitivity of the continuous leakage-rate measurement

system employed at CVTR. The effects of environmental conditions on the leakage-rate measurement system were also investigated, as well as the system's response to a known leakage rate.

1.2.2 Procedure

Performance of the preliminary continuous leakage-rate evaluation program was an extension of the present leakage-rate tests with additional and more accurate instrumentation and detectors.

Continuous leakage-rate tests are conducted at the CVTR during reactor operation. The leakage rate is measured by the reference-vessel method at a vapor container overpressure of approximately 2 psig. Measured quantities of makeup air maintain the 2-psig overpressure and provide an additional check on the leakage rate. The relative sensitivity of the continuous leakage-rate measurement system was determined by using an adjustable known-leakage-rate device installed in a suitable containment penetration line to superimpose a known leakage rate for a given period of time.

1.3 Additional Instrumentation

A brief description is given below of the additional instrumentation and experimental apparatus installed or to be installed in CVTR for this task and/or tasks in phase II.

1.3.1 Air Temperature Measurements

Calibrated thermocouples were installed in the vapor container, with the number of thermocouples in a given horizontal segment proportional to the relative free air volume in that part of the container. Approximately 2500 ft of bare nickel wire was similarly distributed for use as resistance thermometers. Also, a few highly accurate (0.02°F) temperature-measuring devices were installed.

1.3.2 Humidity Measurements

An additional humidity-measuring system will be installed in the vapor container to more accurately determine changes in moisture content of the containment air. It will have five different sampling locations so that a representative sample of the containment atmosphere will be obtained.

1.3.3 Pressure Measurement

Instrumentation will be installed to measure reference-vessel pressure, barometric pressure, containment-vessel pressure, and the differential pressure that develops between the containment vessel and the reference vessel.

1.3.4 Reference-Vessel System

The existing reference-vessel systems are used, but double valving was installed in the containment reference system isolation line to help prevent leakage from the reference system during the test period.

1.3.5 Superimposed Leakage Rate

The known-leakage-rate apparatus will consist of a tap from the vapor container, a pressure regulator, a calibrated gas meter, and a tap to the stack.

The limited phase I tests were performed, with the reactor shutdown, beginning March 11, 1967 and ending on April 2, 1967.

2. Phase II

Phase II will begin about two months after final CVTR reactor shutdown and continue for at least six months. Programmatic changes in phase II tasks resulted in the elimination of plans for further continuous leakage-rate testing at the CVTR.

2.1 Objectives

A leakage-rate testing program has been carried out at CVTR in compliance with the technical specifications.[39,40,89] The second phase of the in-plant test program will (1) determine the sensitivity and adequacy of present leakage-rate measurement techniques; (2) obtain experimental information on the containment vessel and penetration assemblies that can be used to extrapolate leakage-rate test data from ambient temperature to design-basis-accident (DBA) conditions; and (3) perform containment system tests under simulated DBA conditions, first with hot air and then with steam, to determine the effect of these conditions on the leakage rate, penetrations, vessel strain, equipment, and safety system operation.

2.2 Plans

2.2.1 Integrated Leakage-Rate Tests

Integrated leakage-rate tests similar to those conducted to assure compliance with the technical specifications will be performed by pressurizing the vapor container and allowing the pressure to decay over a period of time. The leakage rate will be determined both by the reference-chamber method and by the absolute-pressure measurement method. At the end of the decay time, the vapor container pressure will be returned to its original value and the amount of makeup air will be measured to provide a third independent check on the total leakage.

Tests will be run at 6, 13, and 21 psig in ascending and descending order to evaluate the relationship between the leakage rate at low and high test pressures. At 13 psig, two additional tests will be run, one with containment air at normal atmospheric humidity (~50%) and one with containment air at a very low humidity (<5%). These tests will be made to investigate the effect of containment atmosphere humidity on the leakage rate and leakage-rate measurements. The existing equipment used for the integrated leakage-rate tests required by the CVTR technical specifications will be utilized for these parametric studies, along with additional instrumentation, including humidity-indicating equipment and temperature-measuring devices.

2.2.2 Penetration Leakage-Rate Tests

Leakage-rate testing of representative penetration assemblies in the vapor container will be conducted under various environmental conditions. These test conditions will be accomplished by enclosing individual penetration assemblies within a special apparatus supplied with steam. Particular attention will be given to tests on electrical penetration assemblies because of their susceptibility to aging and deterioration. Experimental data for the extrapolation of ambient-temperature leakage-rate data to determine the leakage rate expected at DBA conditions will be obtained. Potential methods for carrying out integrated leakage-rate tests at DBA conditions will also be evaluated on a small scale by using the special apparatus for an environmental test chamber.

2.2.3 Containment DBA Tests

An extensive series of simulated tests under design-basis-accident conditions is proposed to determine the effects of DBA conditions on a typical containment system. The following four DBA-type tests are proposed.[90,91]

2.2.3.1 Hot Air Test. To evaluate the effect of temperature, the initial DBA-type test will be conducted with hot air. The containment vessel will be pressurized to 21 psig, and high-capacity heaters will be used to raise the atmosphere at constant pressure (21 psig) to approximately 215°F. The heaters will then be programmed so that the heat input balances the heat loss and steady-state conditions are established. The following measurements will be made during this test.

Containment vessel leakage rate. Integrated leakage-rate measurements similar to those made at ambient temperature will be made at 21 psig and 215°F. The leakage rate at these conditions will be compared with the previous ambient temperature leakage rate so that the added effect of temperature can be determined.

Containment vessel strain. Prior to starting the high-temperature integrated leakage-rate testing, the containment vessel steel liner will be instrumented with strain gages. Base-point strain measurements will be made at ambient temperature and various pressures up to and including 21 psig during the initial pressurization in preparation for the high-temperature leakage-rate testing. Additionally, strain measurements will be obtained at several intermediate temperatures during heating and at the maximum temperature during the hot-air leakage-rate testing. By taking strain measurements at several conditions, a good basis for comparison will be established.

The CVTR strain measurements will provide valuable data that will be directly applicable to current and planned power reactor systems. The CVTR containment vessel (steel-lined concrete) is typical of several current power reactor containment vessels, particularly those for Palisades, Turkey Point, H. B. Robinson, and Connecticut Yankee reactors.

Equipment effects and safety system operation demonstration tests. The ability of safety systems and key safety equipment components, such as valves, switches, pumps, instrument sensors and readout, etc., to

function properly during a design-basis accident and/or in a DBA environment is essential to the safety of a power reactor. In particular, following an accident an accurate knowledge of the reactor condition is required before proper action can be taken. Therefore, this portion of the proposed program will be directed toward quickly checking the operational status of safety systems and key safety equipment under DBA conditions to determine whether they work properly and give a correct indication of the existing reactor and plant conditions. The equipment items to be checked will include control-rod drives and associated instrumentation; nuclear instrumentation channels; and primary coolant flow-, temperature-, and pressure-indicating instrumentation. Since much of this equipment was originally designed to operate under DBA conditions, this test will also be a proof test of the equipment design.

Three safety systems will be placed in operation — the emergency injection system, the emergency cooling system, and the air-recirculation system. Each system will be operated long enough to insure that the individual components (pumps, motors, valves) are functioning properly and that the system as a whole is operating correctly. The safety systems operational tests are not intended to obtain reliability information, but to answer one question — will a safety system installed to limit an accident operate in an accident environment? In developing detailed test plans for these tests, the CVTR emergency procedures will be reviewed and used as guidelines in the selection of the specific instrumentation, controls, and safety systems to be tested.

Additional information. During the hot-air leakage-rate tests, information will be obtained on the thermal properties of the CVTR containment system, and the heat capacity and steady-state heat transfer data, such as heat losses, temperature profiles, etc., will be determined. This information will be useful for comparison with calculated values and can be used as input to containment-response computer codes.

2.2.3.2 Steam Test — Natural Decay. The initial, simulated DBA steam test will be performed by rapidly bringing the containment atmosphere to DBA pressure conditions (21 psig) with steam, shutting off the steam flow, and allowing the containment atmosphere to return to ambient conditions by natural decay. Steam for this test can be supplied from

South Carolina Electric & Gas Company's Parr Steam Plant. CVNPA presently supplies steam produced at CVTR to the 400-psi 725°F header at the Parr Steam Plant through a 10-in. steam line. With suitable minor modifications, steam can be supplied in a reverse direction through this line from the Parr plant header to the CVTR containment system. The boiler capacity at the Parr plant for this header is 400,000 lb/hr ($\sim 1.5 \times 10^5$ Btu/sec), which, if supplied to the CVTR containment vessel, can produce simulated DBA conditions in approximately 100 sec. A 100-sec rise time to containment DBA conditions is representative of a severe loss-of-coolant accident. Additionally, if the steam flow is allowed to proceed for 175 sec, the energy added to the CVTR containment system will be approximately equivalent (based on Btu per cubic foot of containment volume) to the DBA energies postulated for release into the Connecticut Yankee and H. B. Robinson PWR containment vessels. Performance of this latter 175-sec test would be contingent on the ability of CVTR's containment structure to withstand the resultant pressure and temperature buildup associated with the additional energy input.

A primary objective of this test is the accurate measurement of the pressure-temperature-time history of the containment atmosphere. The data will be compared with predictions calculated by the CONTEMPT code[92] and other such computer codes, if available. An evaluation will then be made of the ability of the computer code(s) to predict the containment atmosphere response to the simulated DBA. In addition, while the system conditions are decaying to ambient conditions, the tests that were performed during the hot-air test (discussed in a previous section) will be repeated, including leakage-rate, vessel strain, equipment effects and safety system operation, and thermodynamic measurements, so that the added effects of a steam atmosphere can be determined.

2.2.3.3 Steam Test – Containment Spray. A second simulated DBA steam test will be performed to determine the containment response to, and the effectiveness of, a typical containment-pressure-reduction spray system. This test will be performed by using steam to bring the containment atmosphere to DBA conditions. The spray system will be actuated in the normal manner and measurements made of the pressure-temperature-time

history of the containment atmosphere. Containment-vessel strain measurements will also be made, provided the strain gages remain intact after the initial steam test. The experimental pressure-temperature-time data will be used to compare with and evaluate the calculated containment response from computer codes.

An additional and important objective of the spray system test will be to demonstrate the effectiveness of such a system and thereby establish a design basis for this engineered safety system. Examinations of safety analysis reports indicate that containment spray systems being installed in current PWR and BWR plants vary considerably in design and purpose. For example, of four systems examined, flow rates varied from 500 to 4000 gpm. Generally, the basic purpose of the spray system is pressure reduction; however, an additional function for some systems is cleanup of fission products in the containment atmosphere following the DBA. Consideration will be given to the use of additives, such as basic acid and sodium thiosulphate, to evaluate system corrosion and possible nozzle-clogging effects.

Because of the similarity between the CVTR containment structure and that of the Connecticut Yankee reactor, the spray system to be installed in CVTR will be patterned after the Connecticut Yankee system. The Connecticut Yankee spray system is designed with a relatively high flow rate-to-containment volume (up to $\sim 1.6 \times 10^{-3}$ gpm/ft^3); therefore additional testing with the CVTR system could be performed to simulate pressure-suppression spray systems with lower flow rate-to-containment volume ratios, such as that of the H. B. Robinson power reactor system ($\sim 4 \times 10^{-4}$ gpm/ft^3). Based on the Connecticut Yankee system and scaled on a flow rate-to-containment volume ratio, the CVTR pressure-suppression spray would require a flow of about 400 gpm.

To thoroughly check out the CONTEMPT code, it may be necessary to perform spray tests at two different flow rates and vary the nozzles to produce at least two different ranges of droplet size.

2.2.3.4 Steam Test – Core Decay Heat. The final, simulated DBA test will be a steam test similar to the previous two tests with the addition of a heat source to simulate the fission-product decay heat of a

power reactor core. For this test, the containment system will be rapidly brought to DBA conditions with steam and immediately subjected to a programmed heat source produced by continuing the steam flow at an ever-decreasing predetermined rate and/or by using electrical heat.

Preliminary analysis shows that such a test can be performed with steam, since the steam supply is more than adequate to simulate large power reactor core-decay heating scaled to CVTR's containment vessel on the basis of Btu's per cubic foot of containment volume. The sequence of this test will require further analysis to determine (1) the size of the simulated heat source and at what point it should be removed and (2) when the pressure-suppression spray should be activated. During this test, as in previous tests, the pressure-temperature-time history of the containment system will be measured, and the data will be used to evaluate analytical predictions of the containment response.

Consideration will be given to measuring the steam condensation rates on the inner surface of the containment vessel wall and on a number of representative surfaces of the major heat sinks in the containment system. Also, the feasibility of performing steam-distribution, quality, and convection-velocity measurements during and subsequent to the initial steam injection will be investigated.

Appendix H

CONTAINMENT SYSTEMS EXPERIMENT

The Containment Systems Experiment (CSE) will be used to examine the course of a range of simulated loss-of-coolant accidents in water-cooled reactor containment systems. In the experiments, tests will be made of the transport behavior of fission products in a containment system, the rate of loss of coolant from the primary system, the consequent mechanical loadings produced on various reactor and containment system components, the efficiency of engineered safety features (such as recirculation filters, sprays, and pool suppression) in reducing containment system pressure and fission-product mobility, and leakage characteristics of typical containment structures. As may be seen, the CSE program emphasizes areas other than developing methods of testing containment systems.

The basic objective of the leakage-rate tests planned for the CSE is to relate the leakage of fission-product activity from a containment system to the leakage rate measured with air by the customary techniques. The leakage-rate tests will begin with room-temperature air-leakage tests at several pressures and levels of leakage rate, and the sensitivity and magnitude of errors involved in such tests as usually performed will be investigated. Following the tests with ambient air, experiments will be run at elevated temperatures. These hot-air tests will be performed at several pressures representative of steam-air mixtures at the same pressures. Steam-air tests will follow to explore the effect of representative accident temperatures, pressures, and atmospheres on leakage rates. Finally, the leakage of fission-product aerosols at representative containment vessel leak points will be measured during the fission-product transport tests.

Equipment for the CSE consists essentially of a large containment vessel and a model reactor vessel. The model (reactor primary) vessel is 42 in. ID, 17 ft high, has a volume of 150 ft^3, and is designed for a maximum pressure of 2500 psig at 600°F. Dummy cores and other internals can be installed in the model vessel. The containment shell is 25 ft ID, 66 ft high, has a volume of 30,000 ft^3, and is designed for an internal

pressure of 75 psig. Provisions can be made for using fission products and simulants for testing engineered safety features. The construction of the CSE facility is essentially complete. Preliminary leak tests were concluded, and detailed studies of leakage began in December 1966. Initial aerosol transport and blowdown tests began in the spring of 1967.

The completed and planned leakage-rate tests consist of the following tests designated series L-1 through L-6.

Series L-1. The tests in series L-1 consisted of the initial shakedown leakage-rate tests of the containment vessel as a whole, including the dry well and the wet wells. The tests supported the specific objectives listed under items 1 and 2 in Section 4.1 and were performed with the vessel in the "as-is" condition; that is, without extensive leak location and repair efforts. However, major leaks were repaired, and the resulting leakage rate was between 1 and 10% of contained weight per day at 70 psig. These tests were carried out with incomplete penetrations; that is, not all containment valves had been installed and the final electrical and instrument wiring penetrations had not been completed.

Series L-1 involved tests at six pressures between 5 and 70 psig with ambient-temperature air. The measurements made and the data taken were basically pressure, temperature, humidity, and flow rate as required for integrated leakage-rate measurements by the absolute and reference-vessel techniques and for leakage-rate measurements for individual leak points. These measurements are common to series L-1, L-2, and L-3.

Shakedown tests with normal air continued intermittently until late April 1966. During this period, installation of heating devices, aerosol-sampling devices, typical penetrations, etc., was completed in preparation for subsequent test series. Leakage tests were interspersed with the construction activities to develop experience in operational techniques. This series was completed.

Series L-2. Series L-2 tests were similar to those of series L-1 in objectives, test conditions, and measurements, but all penetrations had been installed. The objective was to determine ability to make meaningful and accurate leakage-rate measurements as a function of pressure and the level of leakage rate. Tests were performed at a minimum of three pressure levels and at three levels of leakage at each pressure. Pressures

were 10, 30, and 60 psig and nominal leakage rates were 0.1, 0.5, and 1.0%. Increases in scatter of data at lower leakage rates will be examined further as indications of the feasibility of measuring and verifying very low leakage rates. The leakage rates were varied by varying the degree of tightness in the various penetrations. Normal air was used, and leakage was measured at individual penetrations for comparison with data from later steam-air tests. This series of tests was completed, and data analysis is in progress.

Series L-3. The tests of series L-3 were an extension of series L-2 tests with operational penetrations complete. In these tests the trend of air leakage as a function of pressure was examined further. At a level of leakage determined from the preceding series (0.1%/day at 60 psig), several new pressure levels were tested to examine extrapolation from low-pressure tests, presence of critical flow phenomena affecting extrapolation, and comparison of individual leakage at typical penetrations with total leakage. The tests were run with normal air and traces of xenon to form as large a body of statistical data as possible (in conjunction with preceding series) on the leakage rates of penetrations and the basis for comparison with later tests with steam-air mixtures and fission-product aerosols. Tests were performed at pressures of 60, 45, 30, 15, 10, 5, and 1 psig. The tests of this series were completed, and data analysis is in progress.

Series L-4. The series L-4 tests have the objective of investigating extrapolation of leakage-rate data from tests with low-temperature air to postaccident (loss-of-coolant) conditions of steam plus air. The planned test pressures will cover three values for which air-leakage rate data will be taken for the individual penetrations just prior to the start of series L-4; tentatively, the pressures will be about 10, 20, and 30 psig.

These tests will involve only direct collection and measurement of leakage at individual leaks. Integrated leakage-rate measurements based on the perfect gas law are not feasible, so the total leakage rate must be taken as the sum of the individual leaks.

Series L-5. Series L-5 is included with the objective of determining the effect of air temperature alone on leakage rate. The tests will cover three combinations of pressure and temperature of an air atmosphere to correspond to the pressure and temperature levels of series L-4 with a steam-air atmosphere. Direct measurement of leakage rates at the individual penetrations will be made. Integrated leakage-rate measurements with the gas-law methods will be attempted, but because of the large temperature gradients and temperature changes expected with time, the results may be subject to large uncertainty. The containment air will be heated with steam space heaters located in the containment vessel and remotely controlled to provide the required air temperature.

Series L-6. Series L-6 includes tests to investigate the leakage of fission-product aerosol through representative containment leakage paths. Experimentally, these tests will be performed during the course of runs primarily for investigating fission-product aerosol transport. During these tests, periodic samples of the containment atmosphere will monitor the aerosol concentration near the entrance to a leak path previously characterized as to leakage rate as a function of pressure and atmosphere. Leakage of the steam-air-aerosol mixture will be collected in samplers, and from these data the decontamination, if any, in the leak path can be determined.

Appendix I

LOSS-OF-FLUID TEST

The LOFT test program, which involves modeling a loss-of-coolant accident in a 50-Mw(th) nuclear plant, is intended to increase knowledge of the possible consequences of the accident (see Refs. 84 through 87 at end of text). The objectives of LOFT are to provide information (1) to assist in establishing criteria for the design of plant equipment vital to safety and engineered safety systems, (2) to assist in determining the relative importance of the phenomena that occur during the accident sequence, (3) to establish the reliability in extrapolating results from laboratory and small-scale experiments, and (4) to assess the validity of analytical models developed to describe all or portions of the accident.

The overall LOFT test program consists of the following five phases: (1) containment leak tests, (2) blowdown tests, (3) reactor tests and operation, (4) loss-of-coolant tests, and (5) postaccident examinations. In addition to phase 1, some parts of phases 2 and 4 are pertinent to containment systems testing.

1. Facility Description

The reactor is installed within a dry containment vessel 70 ft in diameter and 97 ft high, with a volume of 302,000 ft^3. After consideration of the design-basis accident (DBA) for LOFT, which hypothesizes a complete blowdown of the primary and secondary systems, plus energy contributions from reactor decay heat and from 100% metal-water reaction, the containment design pressure was established at 40 psig.

To ascertain containment integrity before each test, to establish leakage rates as a function of pressure and temperature, and to allow remote decontamination of the containment vessel interior following a planned fission-product release, several special provisions are to be incorporated in the LOFT building. Features pertinent to containment systems testing are an internal concrete missile shield, pressure-reduction sprays, leakage-rate measuring equipment, and monitored penetrations.

The facility provides for the removal of the entire reactor system from the containment vessel through a large door equipped with a pressurized double seal. In fact, the general philosophy of design of all access doors has been to preclude leakage by employing double seals with the capability of annulus pressurization to twice the containment system design pressure.

All other penetrations have double seals, such as double-potted connectors in electrical cable penetrations and double isolation valves in piping connections. With this arrangement, the fission-product leakage through each penetration can be collected, the penetrations can be pressure and leak tested independently of the containment vessel, and the gross leakage through penetrations can be measured when the containment vessel is pressurized with either dry air or a steam-air mixture.

The capacity of the original containment spray system was increased substantially at the suggestion of ACRS to provide for more rapid pressure reduction in the containment system. As a result, a conservative analysis indicates that the containment pressure can be reduced from the accident peak to 2 psig within 1 hr and to 1 psig in 1.3 hr. Spray delivery rate and secondary coolant flow rate are both set at 1000 gpm.

2. Phase 1 — Containment Vessel Pressure and Leak Tests

Phase 1 of the experimental program is designed for investigating the containment pressure and leak characteristics. A series of tests will be performed to insure that the air leakage rate from the containment vessel meets the design specifications and to determine the leakage rate as a function of pressure. These tests are expected to provide a high degree of assurance that the containment vessel will withstand the pressure associated with primary coolant blowdown, as well as information on the leakage rate as a function of pressure. This information is needed for a correlation of the data on air leakage rates with the data on leakage rates of fission products in air-steam atmospheres to be obtained in phase 2 for a final assessment of the radiological hazard that may prevail during the loss-of-coolant tests (phase 4) and for interpretation of the final results of the loss-of-coolant tests (phase 5).

The first series of leak tests, which are normally considered as acceptance tests, will be performed by the construction contractor to investigate the pressure capabilities of the containment vessel and its leakage rate. The second series of tests will be performed as part of the experimental program to determine the leakage characteristics of the containment vessel. These tests will include (1) determining the total leakage rate from the containment vessel as a function of pressure, (2) determining the leakage rate through containment vessel penetrations as a function of pressure, (3) calibrating and adjusting controlled leaks, (4) determining the ability of the operational and test instrumentation to function properly under pressure conditions, and (5) evaluating existing techniques, as well as techniques that may be developed in the future, for measuring containment leakage.

Consideration is being given to carrying out several of the leak tests with radioactive tracers to gain early information on fission-product leakage and the filtration effect of the penetrations. All leak tests in this series will employ dry air at ambient temperature. Leakage-rate measurements will be made with both the absolute and the reference-chamber methods.

2.1 Tests Performed by the Construction Contractor

The containment vessel will be pressure tested to 46 psig (115% of design pressure) at the conclusion of vessel erection, with the railroad door in place and the penetrations capped, but prior to installation of internal facilities and experimental apparatus. The total leakage is not to exceed 0.2 wt % of the vessel free volume in 24 hr at the design pressure of 40 psig at this stage of construction. At the conclusion of construction, with all piping and electrical penetrations completed, the vessel will again be pressure tested to 46 psig. (During these pressure tests, containment vessel strain will also be measured.) Leakage from the completed containment vessel is not to exceed 0.2 wt % of the building free volume in 24 hr at an internal pressure of 24 psig.

The 0.2% leakage criterion is sufficient to preclude excessive doses at the boundaries of the National Reactor Testing Station. If further reduction of leakage through the penetrations is desired, the plenum

between the double seals of the penetrations can be pressurized to above the pressure existing in the containment vessel.

2.2 Tests Performed as Part of the Test Program

2.2.1 Leak Tests at Several Pressures. This portion of the phase 1 leak tests consists of determining the total gas leakage from the containment vessel at the pressure expected during the loss-of-coolant test and at several lesser pressures. This information is needed to predict with some assurance the fission-product leakage to the surrounding environment and the subsequent radiological hazards that may prevail during conduct of phase 4 of the program. It will also provide some information on the reliability with which the leakage rate at high pressures can be predicted from measurements made at low pressures.

The containment vessel will also have a controlled leak of known size located near the coupling station. The gas leakage rate through this controlled leak will be determined as a function of pressure. The fission-product leakage through this controlled leak will be captured by filters and analyses made to provide information on fission-product leakage through an orifice of known geometry, size, and air leakage rates. Since this orifice will offer a minimum of resistance to fission-product leakage, information can be obtained to estimate the minimum filtration or fractionation of fission products that can be expected in passing through a leak path. Other techniques for measuring containment leakage will also be evaluated.

2.2.2 Pressure and Leak Tests Involving Radioactive Tracers. Trace quantities of ^{130}I and ^{85}Kr will be released to the containment vessel during a pressure test in an attempt to determine the filtering effect of the controlled and monitored leak paths for radioiodine and to determine the general location of uncontrolled leak paths. In addition, these tests are expected to provide some early data on iodine-retention qualities of the containment vessel walls and equipment surfaces.

The filtering effects of the leak paths will be determined by measuring the radioiodine concentration inside the containment vessel and in the penetration filters. The internal air will be continuously

circulated throughout the test to provide a homogeneous distribution of the radioactive tracers.

2.2.3 Leak Tests During Other Phases of the Experimental Program. A leak test at 24 psig will be performed prior to each coolant blowdown test not involving a release of radioactive materials. Prior to the tests involving a release of radioactive materials, the controlled leak will be calibrated and adjusted to give a total leakage rate, through controlled plus uncontrolled leaks, of 0.2% of the free volume per day.

3. Phase 2 — Loss of Coolant Test with a Dummy Core

Phase 2 of the experimental program consists of a series of preliminary coolant blowdown tests to (1) investigate the effects of rupture size, rupture location, coolant temperature, and coolant pressure on the response of a nuclear plant, (2) determine the effects of rupture size and location on the transport of fission products to the containment building, and (3) evaluate the reliability and effectiveness of the containment vessel to retain fission products and the spray system to reduce the pressure and, thus, to terminate the fission-product leakage from the containment vessel.

3.1 Nonradioactive Blowdown Tests

Coolant blowdown through 4-, 10-, and 18-in.-ID openings will be investigated as a function of primary coolant temperature (450 to 600°F) and pressure (1200 to 2500 psig). Ruptures will be simulated in both inlet and outlet pipes as near as practical to the reactor vessel.

This phase of the program will be performed on the complete nuclear system, except for the core. A dummy core will be installed to provide the same flow restrictions that will prevail during the actual core meltdown test. Data to be obtained during blowdown tests will include (1) pressure and temperature of the containment environment as a function of time, (2) strain on the containment vessel and the temperature gradient through the vessel walls, and (3) containment vessel leakage rate as a function of time. The leakage-rate information is needed to determine the rate that can be expected during the phase 4 loss-of-coolant tests.

By comparing these data with those obtained during tests with air, the effects of elevated temperature and an air-steam atmosphere on containment leakage can be established.

Following at least one of the blowdown tests, the containment spray system will be activated, and the time required to reduce the containment vessel pressure to atmospheric pressure will be determined. During this time, flow rate and temperature of the spray water will also be measured. The purpose of this experiment is to verify that the spray system meets the design requirements. However, the data obtained will be useful in evaluating the effectiveness of engineered safety features of this type for reducing containment pressure.

3.2 Fission-Product Transport Studies

The series of nonnuclear blowdowns will be concluded with tests accompanied by the release of trace quantities of ^{130}I and ^{85}Kr.

The purpose of these tests is to (1) determine the rupture location that provides the maximum transport of fission products into the containment vessel, (2) determine the space-time history for the transport of iodine and krypton to the containment vessel, and (3) determine the plate-out behavior of iodine in the reactor vessel, primary coolant system, and containment vessel.

In addition to pertinent measurements previously mentioned, the iodine plate out on the containment vessel walls, the iodine and krypton concentrations in the containment atmosphere and outside the containment vessel, and the iodine concentration in the water collection sump will be determined as a function of time. At least one test of this series will again involve operation of the containment spray system.

4. Phase 4 — Loss-of-Coolant Tests with Radioactive Core

Phase 4 of the program is undergoing extensive review at this time. From the standpoint of containment systems testing, it is to be expected that the scope of the tests, measurements, and techniques will parallel quite closely the fission-product transport studies to be made in phase 2.