UNCLASSIFIED
(CLASSIFICATION)

SEP 1 1965

GENERAL ELECTRIC

HANFORD ATOMIC PRODUCTS OPERATION - RICHLAND, WASHINGTON

DOCUMENT NO.
HW-83235

DATE July 10, 1964

COPY NO. 6

TITLE

DEVELOPMENT OF FLUIDIZED BED CHLORINATION FOR CONVERTING PuO_2 TO $PuCl_3$

ISSUING FILE

MASTER

AUTHOR

H. L. Brandt

DISTRIBUTION

NAME	BUILDING	AREA
O. F. Beaulieu	222-S	200-West
H. L. Brandt	234-5	200-West
W. S. Frank	2704	200-East
H. H. Hopkins, Jr.	234-5	200-West
A. M. Platt	326	300
R. J. Sloat	2704-Z	200-West
W. E. Ingalls	234-5	200-West
W. H. Swift	326	300
M. J. Szulinski	234-5	200-West
R. L. Walser	234-5	200-West
Extra (10)		
Records Center		
300 Area Files		

NAME	BUILDING	AREA

RELEASED FOR ANNOUNCEMENT
IN NUCLEAR SCIENCE ABSTRACTS

ROUTE TO	PAYROLL NO.	LOCATION	FILES ROUTE DATE	SIGNATURE AND DATE

54-3000-030 (1-61)

AEC-GE RICHLAND, WASH

UNCLASSIFIED
(CLASSIFICATION)

TO BE USED ON UNCLASSIFIED AND OFFICIAL USE ONLY DOCUMENTS.

DISCLAIMER

This report was prepared as an account of work sponsored by an agency of the United States Government. Neither the United States Government nor any agency Thereof, nor any of their employees, makes any warranty, express or implied, or assumes any legal liability or responsibility for the accuracy, completeness, or usefulness of any information, apparatus, product, or process disclosed, or represents that its use would not infringe privately owned rights. Reference herein to any specific commercial product, process, or service by trade name, trademark, manufacturer, or otherwise does not necessarily constitute or imply its endorsement, recommendation, or favoring by the United States Government or any agency thereof. The views and opinions of authors expressed herein do not necessarily state or reflect those of the United States Government or any agency thereof.

DISCLAIMER

Portions of this document may be illegible in electronic image products. Images are produced from the best available original document.

UNCLASSIFIED

HW-83235

This document classified by
E. H. Hopkins, Jr.

DEVELOPMENT OF FLUIDIZED BED CHLORINATION FOR CONVERTING PuO_2 TO $PuCl_3$

By

H. L. Brandt

Plutonium Chemistry Laboratory
Research and Engineering Operation
Chemical Processing Department

July 10, 1964

HANFORD ATOMIC PRODUCTS OPERATION
RICHLAND, WASHINGTON

Operated for the Atomic Energy Commission by the
General Electric Company under Contract #AT(45-1)-1350

LEGAL NOTICE

This report was prepared as an account of Government sponsored work Neither the United States, nor the Commission nor any person acting on behalf of the Commission

A Makes any warranty or representation expressed or implied with respect to the accuracy completeness, or usefulness of the information contained in this report or that the use of any information apparatus, method or process disclosed in this report may not infringe privately owned rights, or

B Assumes any liabilities with respect to the use of or for damages resulting from the use of any information apparatus method or process disclosed in this report

As used in the above "person acting on behalf of the Commission" includes any employee or contractor of the Commission or employee of such contractor to the extent that such employee or contractor of the Commission or employee of such contractor prepares disseminates or provides access to any information pursuant to his employment or contract with the Commission or his employment with such contractor

NOTICE!

This report was prepared for use within General Electric Company in the course of work under Atomic Energy Commission Contract AT (45-1) -1350, and any views or opinions expressed in the report are those of the author only. This report is subject to revision upon collection of additional data.

UNCLASSIFIED

TABLE OF CONTENTS

	Page
I. INTRODUCTION	3
II. SUMMARY AND CONCLUSIONS	3
III. DISCUSSION	
A. Chemistry	
1. Chemical Reaction	4
2. Oxide Feed Composition	4
3. Reactivity	6
B. Batch Tests	
1. Preliminary Experiments	7
2. Fluidization Tests	7
3. Conversion Tests In A Simple Fluidized Bed Reactor	8
4. Mechanically-Stirred Fluidized Bed Reactor	10
5. Mechanically-Stirred Non-Fluidized Bed Reactor	10
C. Continuous Tests	
1. Features Of Continuous Operation	11
2. Chlorination Tests	
a. Reactor With Bottom Feed And Top Product Removal	11
b. Reactor With Top Feed And Bottom Product Removal	13
D. Status Of Program	16
E. Recommendations	17
1. Filtration	17
2. Oxide Feed	19
3. Stirrer Design	19
4. Bed Height-To-Diameter Ratio	19
5. Instrumentation And Control	20
IV. REFERENCES	20

DEVELOPMENT OF FLUIDIZED BED CHLORINATION FOR CONVERTING PuO_2 TO $PuCl_3$

I. INTRODUCTION

A new plutonium button line process was proposed for calcining aqueous $Pu(NO_3)_4$ directly, chlorinating the oxide product, and finally electrowinning the plutonium metal from the chloride. This process provided a potential need for chlorination equipment. Conversion of PuO_2 with phosgene to $PuCl_3$ had been demonstrated previously in the Plutonium Chemistry Laboratory using a vibrating tube reactor.(1) Experience with this reactor revealed several undesirable features due to the vibration. A fluidized bed contactor became the leading candidate for an improved reactor because of its expected simplicity of design, good heat transfer, minimum thermal gradients, relatively easy addition and withdrawal of solid, and intense agitation. The versatility of the fluidized bed in other systems suggests than an effective chlorinator design may also have application in plutonium work for hydrofluorination, hydrogen reduction, etc.

This report describes the development of a continuous fluidized-bed chlorinator.

II. SUMMARY AND CONCLUSIONS

A mechanically-stirred fluidized bed for converting plutonium dioxide to plutonium chloride with phosgene was developed. Mechanical stirring of the solid phase is required to prevent agglomeration and consequent channeling of the gas through the bed. A continuous reactor may be designed for top feed and bottom removal of product, or vice versa. On the basis of incomplete evidence, top feed is preferred. Semi-continuous operation has been demonstrated with incremental top feed addition and product removal.

A typical continuous run with bottom feed demonstrated 72 percent conversion of PuO_2 to $PuCl_3$ at 185 grams plutonium/hour in a one-stage 2" x 10" reactor. Temperature was 455 C and phosgene gas flow 480 grams/hour. Residence time averaged about 3.2 hours for continuous runs.

With semi-continuous operation in the same reactor with top feed, 95 percent conversion at 150 grams plutonium/hour was demonstrated.

Product purity was sufficiently high to provide feed for an electrowinning process. The powder flows readily. It can be conveyed with a screw with good reliability. Corrosion was negligible in reactors made from Hastelloy* and glass.

III. DISCUSSION

A. Chemistry

1. Chemical Reaction

The conversion of PuO_2 to $PuCl_3$ had been demonstrated earlier in the Plutonium Chemistry Laboratory. Phosgene was selected as a chlorinating agent because of its higher reactivity relative to (1) a mixture of hydrogen and hydrogen chloride, (2) gaseous carbon tetrachloride, and (3) a mixture of chlorine and carbon monoxide. Phosgene effects the conversion to chloride at a temperature 100 degrees Centigrade lower than any of the other reagents. This reagent was successfully used in a continuous operation with a vibrating tube reactor at 500 C.(1)

The principal reaction appears to be

$$PuO_2 + 2COCl_2 \rightarrow PuCl_3 + 2CO_2 + \tfrac{1}{2}Cl_2$$

$$\Delta H_{298\ C} = -60.5 \text{ kcal/g-mol}$$

Note that two volumes of phosgene react to form $2\frac{1}{2}$ volumes of gaseous product. Furthermore, at 500 C the phosgene is 67 percent disassociated into CO and Cl_2--this dissociation being endothermic.

2. Oxide Feed Compositions

Two sources of PuO_2 were used in these studies: first oxide calcined in production equipment at 325 C from plutonium oxalate (designated as WMO** oxide). This material was replaced by PuO_2 calcined from plutonium nitrate in a calciner being developed in the Plutonium Chemistry Laboratory. It is designated in this report as PCL*** oxide. The details of production and the properties of this compound are described by F. D. Fisher.(2)

(*) Trade Mark, Union Carbide Corporation
(**) Weapons Manufacturing Operation
(***) Plutonium Chemistry Laboratory

Three significant physical differences--density, volatiles, content, and particle size distribution--between these oxides are evident from the following tables. The PCL oxide contains sulfate at a ratio $\frac{SO_4}{Pu} = 0.5$, which apparently affects particle structure and consequently its density (see Table I). The large fraction of volatile compounds left in this oxide (the calcined product) is a serious deterrent to moving the solid with a conventional hopper and screw arrangement. Except for titanium and possibly iron corrosion products, there appears to be no practical difference in metal contamination in the two oxides, as evidenced by Table II.

TABLE I

PLUTONIUM OXIDE PROPERTIES

Source	Bulk Density g/cc	Volatiles* Percent	Minor Components
WMO Oxalate Process	1.7 - 2.0	2.4	$C_2O_4^{=}$, C, H_2O
PCL Direct Calcination Process	1.2 - 1.5	17 - 29	NO_3^-, $SO_4^{=}$, H_2O

TABLE II

SPECTROCHEMICAL ANALYSIS OF PLUTONIUM OXIDES

	Ag	Al	B	Bi	Ca	Cr	Cu	Fe	Mg
WMO		2-50		0-50	50-200	5	-	50	2-50
PCL	1	2-10	1	10	2-500	5	2-20	50-220	50

	Mn	Na	Ni	Pb	Si	Sn	Zn	Ti
WMO	2	20-200	5	0-5	10-200	5	50	-
PCL	2-20	200	5	5	5	50	50	200

Table III, based on one series of experiments for each oxide--using a "typical" material--shows how the particle size distri-

(*) Weight loss after one-half hour at 1200 C in air.

bution varied.

TABLE III

SCREEN ANALYSIS OF PLUTONIUM OXIDES

WMO Oxide		PCL Oxide	
Opening Size, Microns	Wt Retained Percent	Opening Size, Microns	Wt Retained Percent
1000	0.4	833	33.5
500	0.6	417	17.4
250	0.4	208	20.3
105	1.0	104	16.2
49	18.2	53	11.8
< 49	16.4	38	0.2
		< 38	0.0

3. Reactivity

The reactivity of the oxide is a function of the temperature and residence time in the calciner, as well as other variables. In general, the reactivity of the PCL oxide based on percent conversion in the various contactors is higher than the WMO oxide. Unfortunately, a thermobalance was not readily available during the development period. However, earlier studies made by Fisher[2] and Sorenson[1] showed that typical PCL direct calcined oxide has a reaction half-time of less than 10 minutes at 450 - 525 C for chlorination by phosgene.

Oxide reactivity tests involved chlorinating 200 mg samples of PuO_2 at a given temperature with a constant flow of phosgene. The $PuCl_3$ was then reoxidized to PuO_2 with air, after which the temperature was raised to 1050 C.[3] Fisher[2] reports 95 - 100 conversion for the WMO oxide and 100 percent conversion in 20 minutes for PCL oxide containing $\frac{SO_4}{Pu} = 0.5$.

To provide a standard for comparing the performance of laboratory reactors, the theoretical performance of 1- and 2-stage reactors was calculated, using the ten-minute half-time (Table IV).

TABLE IV

THEORETICAL CONVERSION IN CONTINUOUS REACTOR
WITH 500-GRAM HOLDUP PER STAGE
(Reaction Ten-Minute Half Time)

	Percent Conversion	Rate In Grams/Hr
One Stage	90	231
	95	111
	98	42
Two Stages	90	966
	95	603
	98	345

B. Batch Tests

1. Preliminary Experiments

Preliminary experiments using WMO oxide in 3.6" diameter x 5" glass reactors resulted in about 90 percent to PuCl3.

The 2500 watt Hoskins furnace surrounding the reactor was heated to about 450 C maximum. The phosgene gas flowed up through the bed at an average rate of 5 grams/min over periods ranging fron 4 - 6-3/4 hours. The gas was distributed through a 40 - 60 micron frit. The charge to the reactors ranged from about 290 to 740 grams of PuO_2.

2. Fluidization Tests

Visual tests were made in a 2" diameter glass pipe with a height of 36". The distributor plate and bed support were 1/8" Hastelloy C sintered metal with an average pore size of 10 microns. A four-to-two inch reducer at the top of the pipe housed a 2" x 4" aloxite* #5 off-gas filter.

These tests at room temperature with argon gas indicated that good fluidization could be obtained with PCL oxide. The bed height of the untamped oxide was 13-3/4", which upon fluidization

(*) Trade Mark Carborundum Company

increased from 1.5 to 3 inches. Gas flowing at 0.125 ft/sec yielded a pressure drop across the bed of 39" of water. Vibration** of the glass tube decreased the void space in the bed, consequently increased the pressure drop of the gas to 49.4" of water. Similar testing with phosgene gas showed that a flow of about 0.039 ft/sec was required to fluidize the powder.

A graph of pressure drop versus argon flow is presented in Figure 1.

3. Conversion Tests In A Simple Fluidized Bed Reactor

A 2500 watt electric resistance furnace was placed around the glass pipe described in (2) above. It was made up in two parts and hinged so that it could be opened for reactor observation.

Conversion experiments definitely showed that simple gas stirring was not sufficient to maintain an adequately fluidized bed. Sintering of the particles apparently was taking place because the reaction temperature was too close to 760C, the melting point of the product $PuCl_3$.

Chlorination using the glass reactor was attempted twice with phosgene--first at 500 C and then at 450 C. The untamped bed height was about 13". In each case the bed was observed to fluidize well at room temperature. However, the solid particles began to agglomerate as the tube was heated. During this time the pressure drop of the phosgene across the bed decreased. Solid lumps were then observed through the glass tube. Electric vibration and a phosgene flow of four to five times that required for minimum fluidization were not sufficient to overcome the agglomeration.

This problem resulted in abandonment of the simple fluidized bed.

(*) Electric vibrator by Syntron.

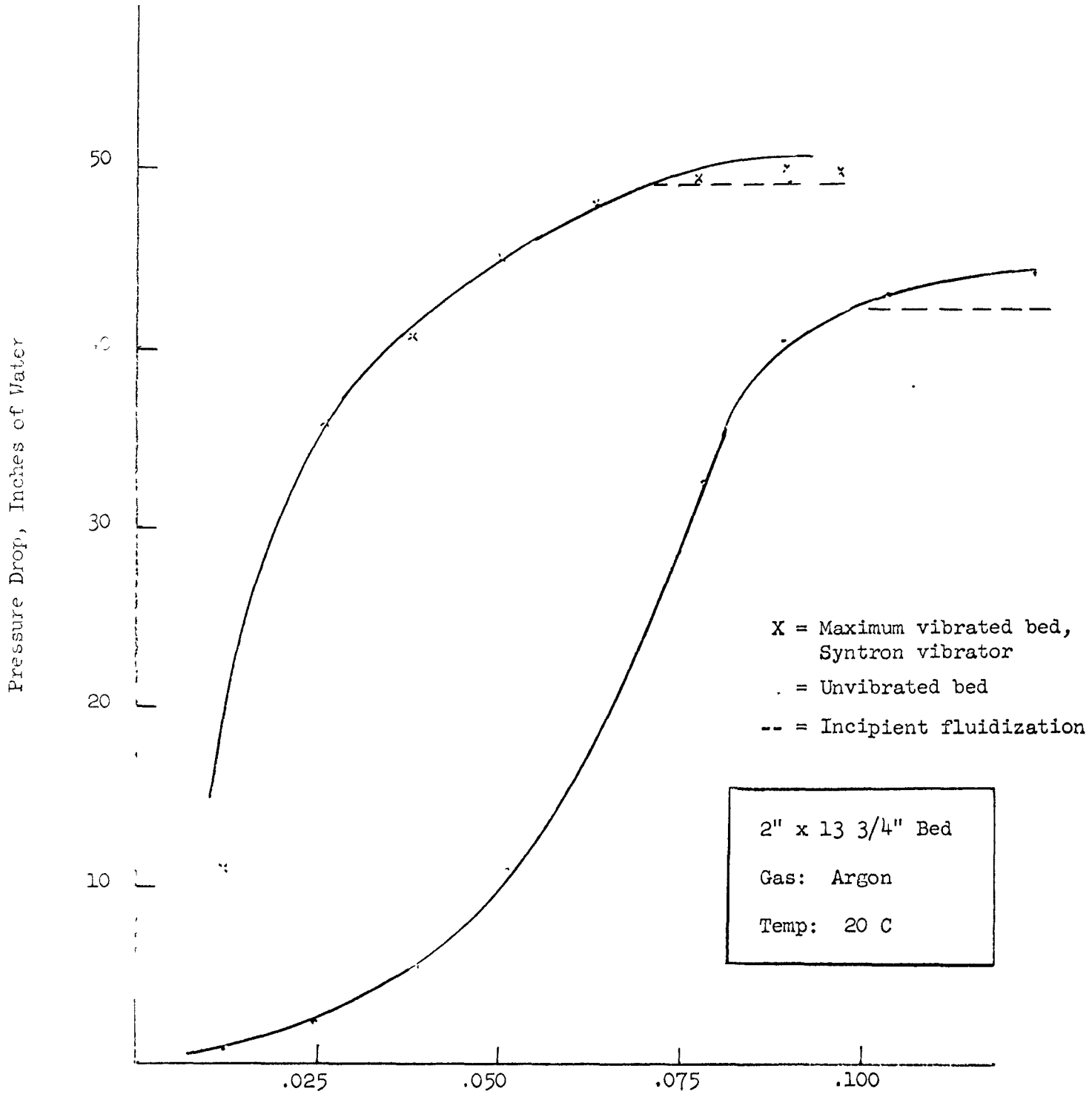

Figure 1

Pressure Drop Across Bed of WMO Oxide

4. Mechanically-Stirred Fluidized Bed Reactor

At this juncture the technique of mechanical stirring was introduced. A 2" nickel pipe 24" long with a Hastelloy C rectangular stirrer powered through a motor and pulley arrangement was used as the reactor. A 1/8" x 1/4" basebar with ring stabilized the stirrer to prevent whiplashing. The $\frac{1}{4}$" shaft of the stirrer penetrated the 2" diameter x 1/8" thick Hastelloy C off-gas filter. Stirring at about 100 rpm successfully suppressed agglomeration so that efficient mixing between solids and gas was achieved. PCL oxide was converted in two different runs to 87 percent $PuCl_3$. In one case 1000 grams of oxide were contacted with phosgene for 255 minutes at an average flow of 7.7 grams/minute (0.005 ft/sec). In the second case, 680 grams of oxide were subjected to phosgene for 226 minutes at an average flow rate of 4.9 grams/minute (0.033 ft/sec). Both used three times the stoichiometric requirement for phosgene. Bed temperature reached a maximum of 520 C (measured at the center) and the corresponding reactor temperature on the outside was held at 475 C. Bed temperature dropped to 475 C before the runs were concluded.

The off-gas temperature was 250 C. Nickel contamination in the product was reported to be 5000 ppm, which casts doubt on the suitability of nickel for this service. No erosion was obvious. Hastelloy was used in subsequent work.

5. Mechanically-Stirred Non-Fluidized Bed Reactor

T. S. Soine[4] found that he could mechanically stir a glass reactor similar to those used in the preliminary tests and described in B-1 above at phosgene upflow below that required for minimum fluidization. At 500 C he routinely made a high-purity chloride with a conversion ranging from 90 to 96 percent depending on the particular oxide feed. Both WMO and PCL oxide was were used as feed. An average of about 120 grams/hour of plutonium were chlorinated. The phosgene was consumed at about 120 grams/hour. This quantity exceeds the stoichiometric requirement by only about 20 percent, which is excellent gas utilization.

Typically the bed in the 2.6" diameter reactor was about 3" high. The stirrer was made from Hastelloy X and had straight blades of $\frac{1}{4}$" square section on a $\frac{1}{4}$" shaft. The distance between one set of blades was 3/4" with a second set of blades opposite being placed on the shaft midway between those of the first. Table V compares metal contaminants of oxide with the corresponding

chloride product.

Elements reported at less than 10 ppm are not included. Since nickel and chromium were less than 10 ppm, corrosion of the stirrer was assumed to be negligible.

TABLE V

CONTAMINATING ELEMENTS IN PuO_2 FEED AND $PuCl_3$ PRODUCT
NON-FLUIDIZED BED
ppm

	Al	Bi	Ca	Cu	Fe	Mg	Mn	Na	Pb	Sn	Zn	Ti
PCL oxide	10	10	500	2	< 50	50	20	200	100	10	50	20
chloride	10	10	2000	10	< 50	100	50	50	50	< 5	50	-
WMO oxide	-	-	200		< 50	100	20	50	50	20		
chloride	-	-	1000		< 50	100	10	20	20	-		

C. Continuous Tests

1. Features Of Continuous Operation

A continuous rather than a batch-reactor is usually more desirable from an operational viewpoint. A steady-state condition then obtains; that is, the feed is continuous, electric power to heaters is constant, and the bed temperature is constant within limits and not subject to high excursions. The volatile content of the feed and the volatile compounds formed during the reaction are constantly being vaporized or flushed off and removed via the off-gas line at a low constant rate. This presents a constant load to the off-gas filter. Another advantage is that the steady-state holdup composition of the reactor is predominantly chloride.

2. Chlorination Tests

a. Reactor With Bottom Feed And Top Product Removal

The first version of the continuous unit (see Figure 2) had a 1" screw feeder at the bottom of a 2" diameter by 10" long Hastelloy tube. The bed height is kept more or less constant by overflow through the 45°, 1" take-off arm. A glass jar adapted to a tee attached to the take-off arm is the product

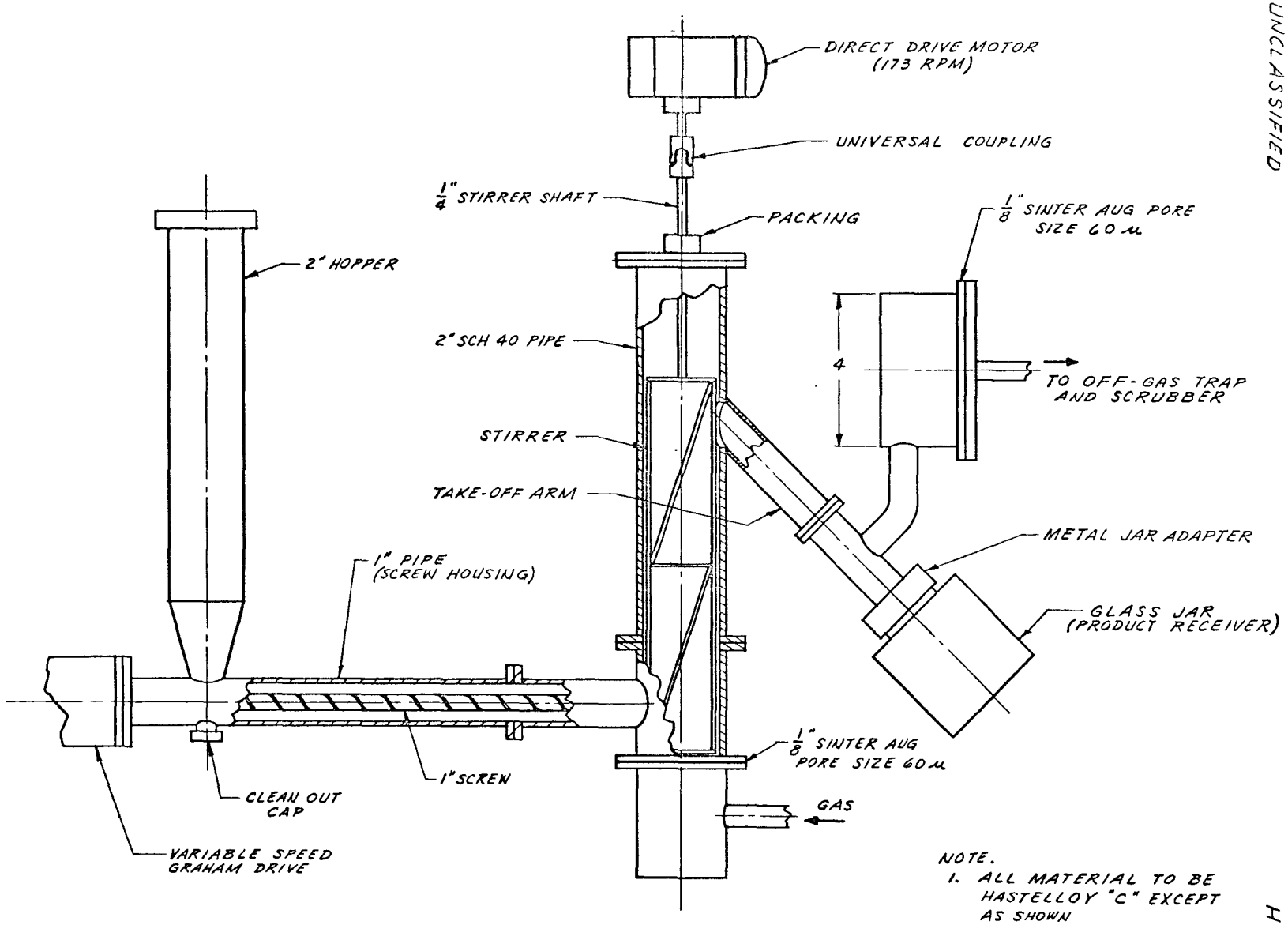

NOTE.
1. ALL MATERIAL TO BE HASTELLOY "C" EXCEPT AS SHOWN
2. 1" ASBESTOS INSULATION ON ALL HEATED SURFACES

FIGURE 2

MECHANICALLY STIRRED FLUIDIZED BED REACTOR CONTINUOUS – BOTTOM FEED

receiver. The off-gas leaves the bed through the take-off arm, assisting movement of the product to the receiver. It then passes through the 4" diameter filter which is made from 1/8" sintered Hastelloy C having an average pore size of 65 microns. The reactangular stirrer is driven directly by an electric motor at 173 rpm. The electric resistance heat is upplied by two 750 w Calrods* opposite each other on the main reactor tube, one 350 w Calrod on the lower tee, and one 250 w heater on the base of the 4" pipe supporting the filter element.

In a continuous run in the equipment just described, PCL oxide was fed at an average rate of 185 grams of plutonium per hour. Phosgene flow rate was 480 grams/hour (more than three times the stoichiometric requirement) and just enough to fluidize the bed. The bed temperature was 455 C. The pressure drop** was steady at 20" of water. The pressure in the reactor did not exceed 5 psig, indicating the filter resistance remained low. The product was 72.3 percent $PuCl_3$. Theoretically these conditions should have converted more than 90 percent in a one-stage reactor of this size.

Dismantling the reactor to determine the reason for the low conversion to the chloride revealed that a significant quantity of the oxide had been entrained with the product. Oxide was found in the take-off arm and even in the filter. Apparently its "dusting" characteristic makes it preferentially entrained out of the chloride bed and into the off-gas. As a consequence, the oxide diluted the product. This dusting characteristic is common to all plutonium oxide tested regardless of the source. As little as five percent dioxide in a binary mixture with $PuCl_3$ can be detected upon shaking the container. This is in spite of a greater absolute density for the oxide. The explanation for this may lie in a lesser effective density of the oxide particles and not in the particle size.

b. Reactor With Top Feed And Bottom Product Removal

In view of this "inherent" product dilution by oxide, the flow of the solid phase was reversed, putting the oxide feed at the top and removing the product from the bottom. In this

(*) General Electric Company Trade Mark.
(**) Taylor Differential Manometer with bellows.

arrangement, the oxide dust is contained in the upper section of the reactor until it is chlorinated. Two secondary advantages were expected to accue from the change: (1) feed and reactant are counter-current, and (2) volatile compounds can be flashed off without having the resulting vapor traverse the bed.

The revised reactor is shown in Figure 3. A $\frac{1}{2}$" screw feeder with hopper was added to the top. The glass jar used as product receiver was placed below the original feed hopper; the old 1" screw feeder became the product removal screw. The old take-off arm was blocked off up to the main tube of the reactor.

An inability to feed the PCL oxide continuously through the hopper and screw arrangement handicapped the obtaining of data. Even a temperature as low as 75 C at the hopper was high enough to affect the flow properties of the oxide. The residual nitric acid began to calcine in the hopper, as evidenced by characteristic brown fumes. The powder bridged in the hopper and clung to its walls. It appeared also to cling to the screw. Equalizing the reactor pressure with argon gas was not sufficient to induce uninterrupted powder flow.

Nonetheless, the oxide was added successfully by increments. Four differentially-fed chlorination runs were made. Conversion to chloride ranged from 90 to 94 percent with an average of 92 percent. Spectrochemical analyses indicated that the product contained less metal impurity than the feed except that chromium and nickel were reported as 500 ppm. Otherwise the content of metal impurities is similar to those shown for the chloride in Table V. The presence of nickel and chromium is assumed to be abrasion of metal from the stirrer against the reactor wall--the part of the stirrer affected was very apparent from visual examination upon removal from the reactor. The assumption is strengthened by the results from the Hastelloy stirrer in the glass reactor (B-5 above). Nickel and chromium were always less than 10 ppm in the product chloride.

Typically, an initial 200 cc of PCL oxide was chlorinated as a batch. Successive additions of about 38 grams of oxide were then made when the preceding addition of feed had reacted as indicated by a rise of about 10 C in temperature

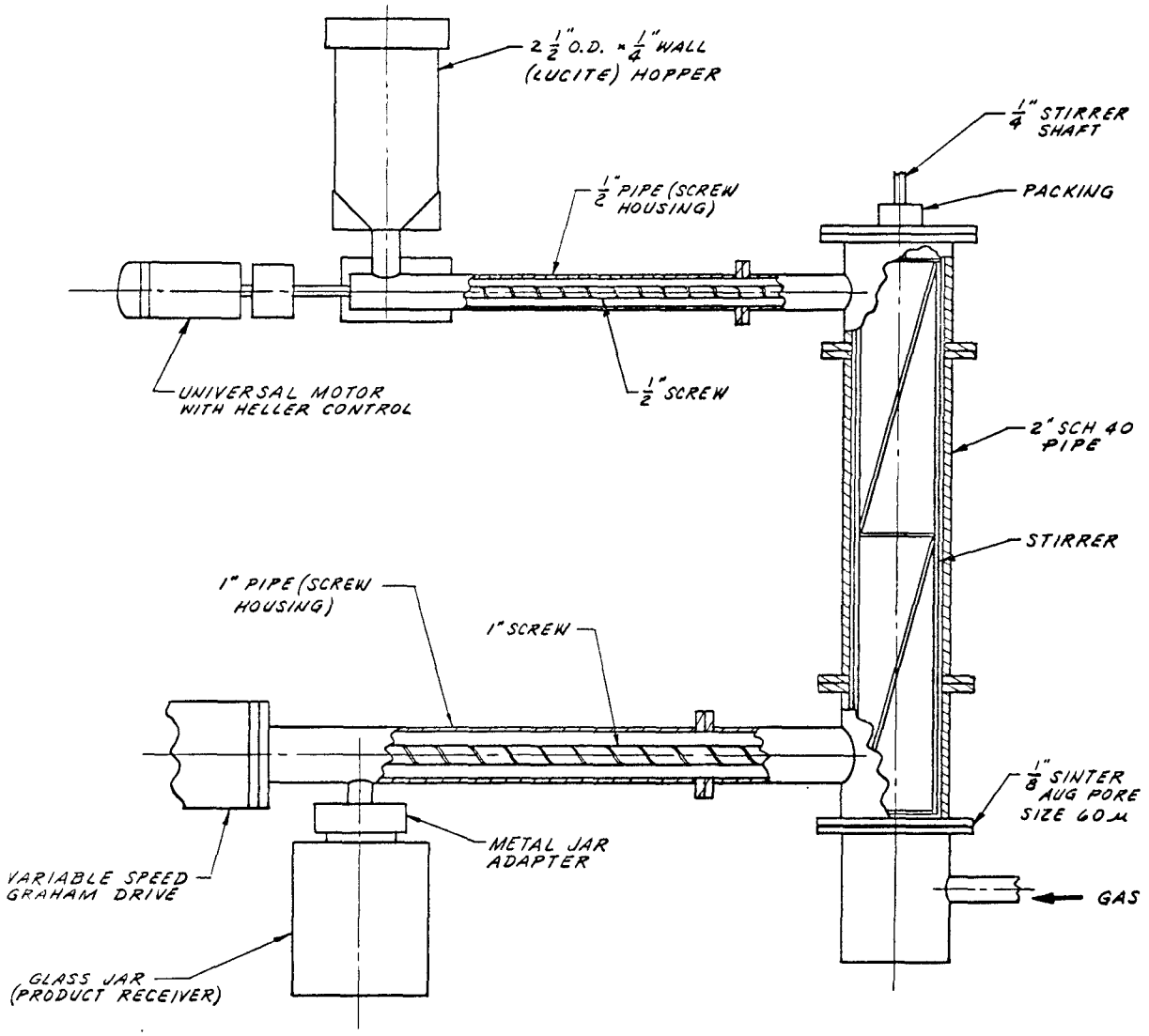

NOTE:
1. 1" ASBESTOS INSULATION ON ALL HEATED SURFACES
2. ALL MATERIAL TO BE HASTELLOY "C" EXCEPT AS SHOWN

FIGURE 3

MECHANICALLY STIRRED FLUIDIZED BED REACTOR CONTINUOUS - TOP FEED

followed by a return to the bed temperature of 435 - 450 C. The phosgene flow varied due to increasing resistance across the off-gas filter, but the flow was always above that required for minimum fluidization.

The off-gas filter gradually built up to 9 psig. Periodic blow-back with 10 psig argon gas did not appear to be effective for keeping the filter open. The temperature of the filter was kept above 375 C. Maximum throughput attained for this "semi-continuous" run was 140 g plutonium per hour for several hours. Three runs were made under approximately the same conditions.

A fair evaluation of this performance is difficult mainly because more than enough time was allowed for the temperature to return to steady-state conditions after each incremental addition of oxide. Nonetheless, the large portion of oxide converted to chloride is encouraging.

D. Status Of Program

The practicability of chlorinating plutonium dioxide with phosgene in a continuous mechanically-stirred fluidized bed has been demonstrated. B oth bottom and top feeding techniques were used. On the basis of incomplete testing, the latter is preferred for obtaining high conversions. In addition, a batch-operated, mechanically-stirred non-fluidized bed was shown to be feasible. The mechanically-stirred reactors produce good, easy-to-convey chloride without caking or agglomeration.

A simple fluidized bed cannot be depending operated at the reaction temperature due to sintering and consequent agglomeration of the solid phase.

PCL oxide could not be reliably handled in the hopper and screw arrangement tested in the top feeding mechanism. Apparently the oxide begins to calcine as it warms, whereupon it begins to bridge and stick in the container. As a result, the "preferred" top feed method was run semi-continuously and not as a truly-continuous unit. Further work should define methods of handling PCL oxide and introducting it into the reactor in a truly-continuous fashion.

Within the limits of these operating conditions, Hastelloy C* and glass appear to have very good corrosion resistance. Scanty evidence indicates that the use of nickel for this service is doubtful. Use of the glass reactor with Hastelloy stirrer showed no corrosion. Therefore, further work with other Hastelloy reactor designs seems warranted to reduce the level of product contaminants. This contamination is evidently the result of friction and erosion rather than corrosion.

E. Recommendations

Improvement in two areas of this work should result in extended, dependable operation. The first is in the off-gas system. The second is the feed mechanism. Other possibilities for refining the operation lie in the bed height to diameter ratio, and the stirrer design. The points mentioned are outlined briefly below followed by comments on instrumentation and control of bed level.

1. Filtration

Filtration can be improved by increasing the area of filtering, reducing the velocity of the off-gas before it gets to the filter, and finally by causing the off-gas to change direction before it strikes the filter. All of these factors tend to minimize the rate at which solid particles would actually reach the filter surface. These features have been incorporated in a newly-designed filter housing (see Figure 4). The housing may be directly adapted to the current reactor. The two ceramic filters increase the filter surface by a factor of 22, slow the linear velocity by a factor of 5, and cause the off-gas to change direction at least once after leaving the solids-gas interface. In this arrangement, the stirrer shaft does not penetrate the filter as before.

Stirring should be slowed to the practical minimum. Less severe stirring would reduce comminution of the solid and reduce dusting. Both factors would tend to reduce the filter load.

The minimum practical gas velocity should be determined even if this is less than for minimum fluidization; provided, of course,

(*) Trade Mark Union Carbide Corporation

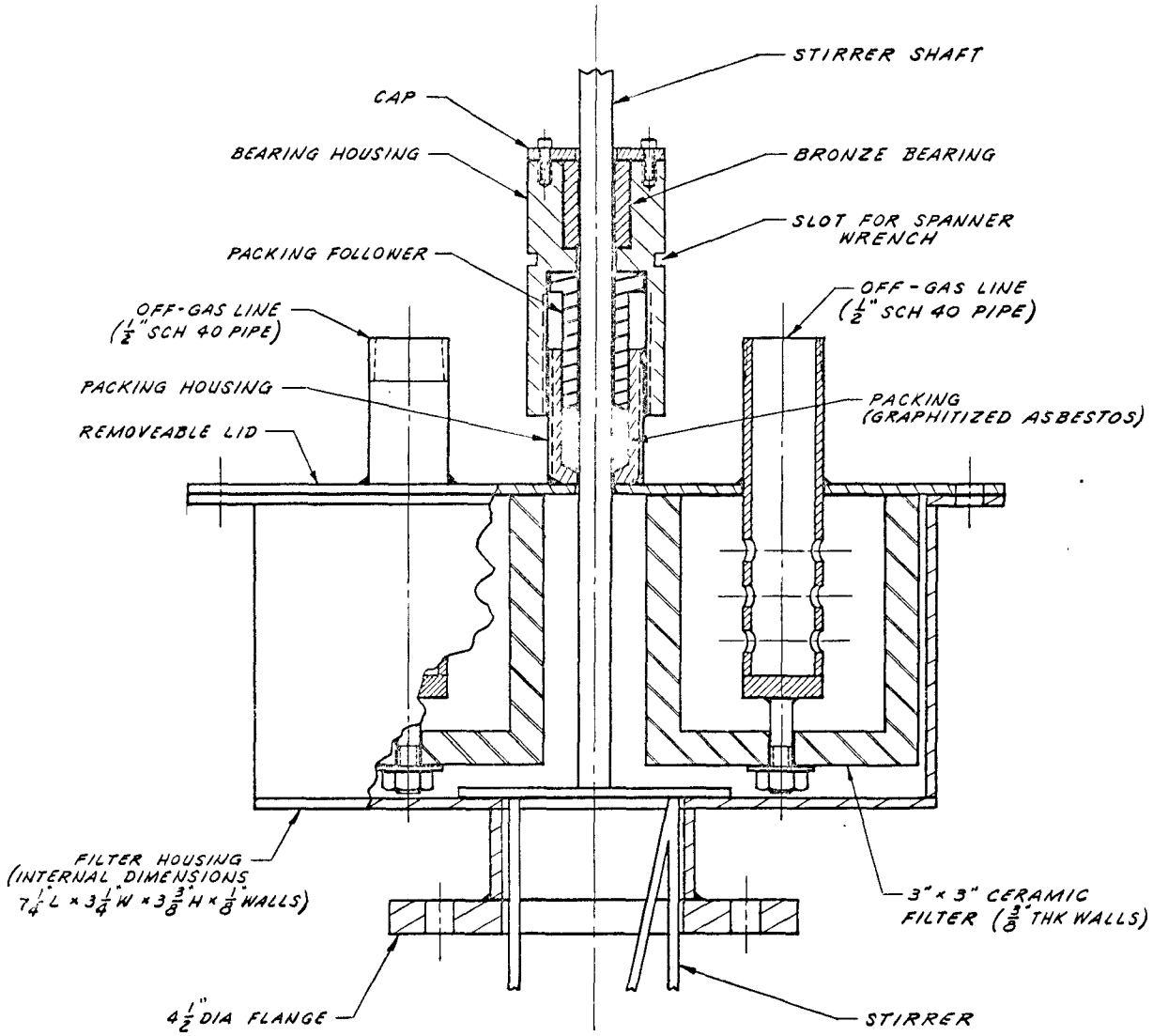

NOTE: ALL MATERIAL TO BE HASTELLOY "C" EXCEPT AS SHOWN

FIGURE 4

FILTER HOUSING AND STIRRER GUIDE

SEC-GE RICHLAND WASH

that dependable stirring, product removal, and minimum particle size can be achieved in the reactor.

2. Oxide Feed

A more positive method of feeding the reactor with oxide is necessary, particularly if material with high volatiles content must be handled.

A hopper should be tested with a constant cross-section all the way down to the screw. A diminishing cross-section increases the probability of bridging. The hopper should be as remote from the heat source as practical and should be insulated to prevent incipient calcining of the oxide, which can occur at a relatively low temperature.

The screw should be greater than $\frac{1}{2}$" in diameter. Various screw types should be tried; i.e., ribbon screw, double flight screw, etc. The possibility of using a rotary pocket (star) valve for feeding the oxide should not be overlooked.

3. Stirrer Design

The stirrer must be operated with stability under the stirring load so that whiplashing against the reactor wall is not possible. The new Filter Housing (Figure 4) includes a precision bronze bearing as well as the bearing given the stirrer shaft at the packing. These two points of bearing versus only one point of bearing as before should provide the desired stability and thus elimination of abrasion of the metal.

Other configurations of the stirrer could be tried to obtain better mixing of solid and gas.

4. Bed Height-To-Diameter Ratio

The ratio of bed height to bed diameter could probably be beneficially decreased. The diameter of the reactor probably could be increased to at least 4".

5. Instrumentation And Control

The pressure drop in a fluidized bed is usually the best index of monitoring bed conditions; i.e., bed height, degree of channeling, etc. The fines in the solid phase in this 2" reactor tend, however, to plug the gas sensing line to the manometer. An alternative would be flush-mounted strain gauges in the reactor wall.

The top-feed reactor may require an additional level control--suggested are x-ray techniques or physical probe; e.g., conductance probe. This type of control would place upper and lower limits on the excursion of the gas-solids interface at the top of the bed and activate the feed or product removal mechanism accordingly.

The top-product-removal reactor does not, of course, require bed level control.

IV. REFERENCES

(1) M. J. Rasmussen and H. H. Hopkins, Jr., "Preparing Plutonium Metal Via The Chloride Process". I&EC, Vol. 53, p. 453, June 1961.

(2) F. D. Fisher, "Reactivity Of Plutonium Dioxide Prepared By Direct Calcination Of Nitrate Solutions", HW-77846. October 16, 1963 (Secret).

(3) R. J. Sorenson, "A Thermobalance For Studying The Chlorination Of Plutonium Dioxide With Phosgene", HW-79141. October, 1963

(4) T. S. Soine, Personal Communication, June, 1964.

H. L. Brandt
Plutonium Chemistry Laboratory
Research and Engineering Operation